BENGAL ASSEMBLIES

JD6145-55M/R T4F

Current as of 4/26/17

PARTS LISTING WITH
MOUNTING AND OPERATING
INSTRUCTIONS

Tiger Corporation
3301 N. Louise Ave.
Sioux Falls, SD 57107
1-800-843-6849
1-605-336-7900
www.tiger-mowers.com

06011038

TO THE OWNER / OPERATOR / DEALER

All implements with moving parts are potentially hazardous. There is no substitute for a cautious, safe-minded operator who recognizes the potential hazards and follows reasonable safety practices. The manufacturer has designed this implement to be used with all its safety equipment properly attached to minimize the chance of accidents.

BEFORE YOU START!! Read the safety messages on the implement and shown in this manual. Observe the rules of safety and use common sense!

READ AND UNDERSTAND THIS MANUAL! Non–English speaking operators will need to GET THE MANUAL TRANSLATED as needed!

DANGER

FAILING TO FOLLOW SAFETY MESSAGES AND OPERATING INSTRUCTIONS CAN CAUSE SERIOUS BODILY INJURY OR EVEN DEATH TO OPERATOR AND OTHERS IN THE AREA.

1.

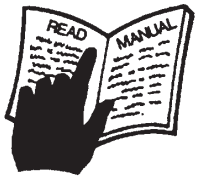

2. NO RIDERS. NO CHILDREN OPERATORS.

3. USE SAFETY SHOES, HARD HAT, SAFETY GLASSES, SEAT BELTS, ROPS & OPS

4. BLOCK UP SECURELY BEFORE WORKING UNDER.

1. Study and understand Operator's Manuals, Safety Decals, and Instructional Decals for tractor and implement to prevent misuse, abuse, and accidents. Practice before operating in a confined area or near passersby.
- Learn how to stop engine suddenly in an emergency. Be alert for passersby and especially children

2. Allow no children on or near folding mower or tractor. Allow no riders on tractor or implement. Falling off may cause serious injury or death from being run over by tractor or mower or contact with rotating blades.

3. Operate only with tractor having Roll-Over Protective Structure (ROPS) and with seat belt securely fastened to prevent injury and possible death from falling off or tractor overturn.
- Personal Protective Equipment such as Hard Hat, Safety Glasses, Safety Shoes, & Ear Plugs are recommended.

4. Block up or support raised machine and all lifted components securely before putting hands or feet under or working underneath any lifted component to prevent crushing injury or death from sudden dropping or inadvertent operation of controls. Make certain area is clear before lowering or folding

5. Before transporting, put Lift Lever in detent or full-lift position. Install Transport Safety Devices securely on folding mowers. Put Booms securely in Transport Rest.
- Folding and Boom Mowers have raised center of gravity. Slow down when turning and on hillsides.

6. Make certain that SMV sign, warning lights, and reflectors are clearly visible. Follow local traffic codes.

7. Never operate with Cutting Head or Folding Section raised if passersby, bystanders, or traffic are in the area to reduce possibility of injury or death from objects thrown by Blades under Guards or mower structure.

8. Before dismounting, secure implement in transport position or lower to ground.
- Put tractor in park or set brake, disengage PTO, stop engine, remove key, and wait until noise of rotation has ceased to prevent crushing by entanglement in rotating parts which could cause injury or death.
- Never mount or dismount a moving vehicle. Crushing from runover may cause serious injury or death.

5. TRANSPORT SAFELY, LOCK UP.

6. USE SMV, LIGHTS, & REFLECTORS.

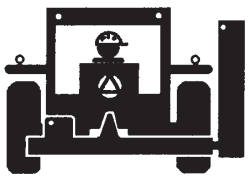

7. DO NOT OPERATE WITH CUTTER OR WING RAISED.

8. DO NOT MOUNT OR DISMOUNT WHILE MOVING.

02967827

Warranty Information: Read and understand the complete Warranty Statement found in this manual. Fill out the Warranty Registration form in full and return it within 90 days. Make certain the Serial Number of the machine is recorded on the Warranty Card, and form that you retain.

FORWARD

This manual contains information about many features of the Tiger mowing and roadside maintenance equipment. Some of these include: Safety precautions, Assembly instructions, Operations, Maintenance and Parts. This manual will also assist you in the proper break-in, daily care, and troubleshooting of your new mower.

We recommend that you read carefully the entire manual before operating the unit. Also, time spent in becoming fully acquainted with its performance features, adjustments, and maintenance schedules will be repaid in a long and satisfactory life of the equipment.

Troubleshooting - Please, before you call, help us to help you!
Please look at the equipment to observe what is happening, then:

- Classify the problem
    - Hydraulic, electrical or mechanical - Read the trouble shooting section
    - Tractor or Truck chassis - Contact vehicle dealer

- If unable to correct the problem yourself, contact your local Tiger Dealer after gathering:
    - Machine model _____
    - Serial number _____
    - Dealer name _____
    - Detailed information about the problem including results of troubleshooting

Attention Owner / Operator / Dealer: It is your obligation to read, and understand, the warranty information section located at the back of this manual denoting that the purchaser understands the safety issues relating to this machine and has received and will read a copy of this manual.

If at any time, you have a service problem with your Tiger mower, Contact your local dealer for service and parts needed.

MANUFACTURED BY:
Tiger Corporation
3301 N. Louise Ave.
Sioux Falls, SD 57107
1-800-843-6849
1-605-336-7900
www.tiger-mowers.com

DISTRIBUTED BY:
_____
_____
1-_____-_____-_____
1-_____-_____-_____

TABLE OF CONTENTS

SAFETY SECTION	1
ASSEMBLY / MOUNTING SECTION	2
OPERATION SECTION	3
MAINTENANCE SECTION	4
PARTS SECTION	5
COMMON PARTS SECTION	6
WARRANTY INFORMATION	7

This symbol means:

CAUTION – YOUR SAFETY IS AT RISK!

When you see this symbol, read and
follow the associated instructions carefully
or personal injury or damage may result.

Tiger is a registered trademark.

SAFETY SECTION

© 2015 Alamo Group Inc.

SAFETY

GENERAL SAFETY INSTRUCTIONS AND PRACTICES

A careful operator is the best operator. Safety is of primary importance to the manufacturer and should be to the owner/operator. Most accidents can be avoided by being aware of your equipment, your surroundings, and observing certain precautions. The first section of this manual includes a list of Safety Messages that, if followed, will help protect the operator and bystanders from injury or death. Read and understand these Safety Messages before assembling, operating or servicing this Implement. This equipment should only be operated by those persons who have read the manual, who are responsible and trained, and who know how to do so responsibly.

The Safety Alert Symbol combined with a Signal Word, as seen below, is used throughout this manual and on decals which are attached to the equipment. The Safety Alert Symbol means: “ATTENTION! BECOME ALERT! YOUR SAFETY IS INVOLVED!” The Symbol and Signal Word are intended to warn the owner/operator of impending hazards and the degree of possible injury faced when operating this equipment.

Practice all usual and customary safe working precautions and above all---remember safety is up to <u>YOU</u>. Only <u>YOU</u> can prevent serious injury or death from unsafe practices.

DANGER Indicates an imminently hazardous situation that, if not avoided, WILL result in DEATH OR VERY SERIOUS INJURY.

WARNING Indicates an imminently hazardous situation that, if not avoided, COULD result in DEATH OR SERIOUS INJURY.

CAUTION Indicates an imminently hazardous situation that, if not avoided, MAY result in MINOR INJURY.

Important Identifies special instructions or procedures that, if not strictly observed, could result in damage to, or destruction of the machine, attachments or the environment.

NOTE: *Identifies points of particular interest for more efficient and convenient operation or repair.*

READ, UNDERSTAND, and FOLLOW the following Safety Messages. Serious injury or death may occur unless care is taken to follow the warnings and instructions stated in this Manual and in the Safety Messages on the implement. Always follow the instruction in this manual and use good common sense to avoid hazards.

NOTE: *If you want a translation of this safety section in one of the following Languages, please contact: Translations at 1502 E. Walnut Street Seguin, TX 78155; Fax: (830) 372-9529; Safety Section Translations are available in Spanish, Portuguese, French, German, Russian.* ***PN GS01***

© 2015 Alamo Group Inc.

Operator Safety

Read and understand Operator's Manual	Always wear Safety Glasses	Wear Hard Hat Safety Shoes	Never use Drugs or Alcohol when operating equipment	Wear Safety Vest when operating on or near roads

WARNING **TO AVOID SERIOUS INJURY OR DEATH DO THE FOLLOWING:**

- **READ, UNDERSTAND** and **FOLLOW** Operator's Manual instructions, Warnings and Safety Messages.
- **WEAR SAFETY GLASSES**, safety shoes, hard hat, hearing protection and gloves when operating or repairing equipment
- **WEAR** appropriate breathing respirator when operating in dusty conditions to avoid respiratory diseases.
- **DO NOT WEAR** loose clothing or jewelry to avoid rotating parts entanglement injury.
- **DO NOT USE DRUGS** or **ALCOHOL** before or while operating equipment.
- **DO NOT ALLOW** anyone to operate equipment under the influence of drug or alcohol.
- **CONSULT** medical professional for medication impairment side effects.
- **STAY CLEAR** of hot surfaces such as Mufflers, hydraulic pumps, valves and tanks.
- **STAY ALERT**, prolonged operation can cause fatigue, **STOP** and **REST**.

GENERAL OPERATING SAFETY

VISIBILITY CONDITIONS WHEN MOWING:

- **OPERATE IN DAYLIGHT** or with lights that gives at least 100 yards clear visibility.
- **BE ABLE TO SEE** and identify passersby, steep slopes, ditches, drop-offs, overhead obstructions, power lines, debris and foreign objects.
- Avoid backing up while mowing, vision may be limited, severe damage or injury can occur.
- DO NOT run tractor in enclosed building without adequate exhaust ventilation.

GROUND SPEED WHEN MOWING:

- **NORMAL SPEED** range is between 1 to 2 mph(1-3 kph).
- **ADJUST MOWING SPEED** for terrain conditions and grass type, density and cut height.
- **REDUCE MOWING SPEED** when near steep slopes, ditches, drop-offs, overhead obstructions, power lines and to avoid debris and foreign objects.

TRACTOR and MOWER

- **DO NOT** operate the tractor or mower unless the equipment is maintained and operating properly.
- **DISCONTINUE OPERATION** if tractor or mower electrical and hydraulic controls do no function properly.
- **DISCONTINUE OPERATION** of the tractor if the braking or steering systems do not function properly.
- **DO NOT** operate the tractor or mower if there are any hydraulic leaks.

INSECT INFESTATION

- **DO NOT** operate in areas where bees or insects may attack unless you **WEAR PROTECTIVE CLOTHING** or use enclosed tractor cab.

PTO SPEED:

- **DO NOT EXCEED IMPLEMENT RATED PTO SPEED**
- **AVOID** exceeding rated PTO speeds that may result in broken drivelines or blade failures.

SAFETY SIGNS:

- **REPLACE** missing, damaged or unreadable safety signs immediately. ***PN OSBM-01***

© 2015 Alamo Group Inc.

CRUSHING HAZARDS

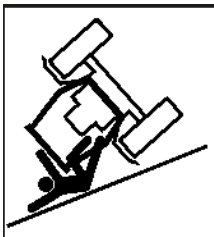	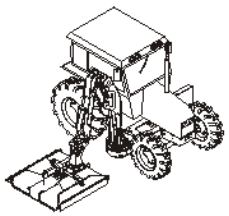			
Crushing injury from roll over	Use Cab Tractor With Boom Mowers	Always wear seatbelt	Pinch Point Hazard Keep Hands and body parts clear of pinch points	Crushing injury from boom or mower head falling

DANGER **TO AVOID SERIOUS INJURY OR DEATH FROM FALLING OFF TRACTOR, EQUIPMENT RUN OVER, ROLLOVER AND CRUSHING BY FALLING WING OR IMPLEMENT:**

- **USE ROPS** and **SEAT BELT** equipped tractors for mowing operations.
- **KEEP ROPS** lock in up position.
- **ALWAYS BUCKLE UP** seat belt when operating tractor and equipment.
- **ONLY OPERATE** tractor and equipment while seated in tractor seat.

WHEN RAISING BOOM MOWER:

- Raise or lower **ONLY WHILE SEATED** in tractor seat with seat belt buckled.
- **KEEP BYSTANDERS CLEAR** of area **TO AVOID** crushing.
- **KEEP** sufficient clearance around implement and wings **TO AVOID** contacting buildings or overhead power lines.

LIFTED Equipment can fall from mechanical or hydraulic failure or inadvertent Control Lever movement.

WARNING **TO AVOID EQUIPMENT FALLING while working near or under lifted boom, components and Mower Head:**

- **SECURELY SUPPORT or block up raised equipment, wings and components.**
- **BLOCK UP and securely support equipment before putting hands, feet or body under raised equipment or lifted components.**
- **KEEP BYSTANDERS CLEAR of raised boom or mower head until securely blocked up.**

WHEN PARKING Implement and Tractor:

- **LOWER** Mower Head to the ground or **BLOCK** lifted parts before leaving equipment.
- **NEVER** leave implement unattended in a raised position.

WARNING **TO AVOID CHILDREN FALLING OFF OR BEING CRUSHED BY EQUIPMENT:**

- **NEVER ALLOW** children to play on or around Tractor or Implement.
- DO NOT operate without operator CAB or OVERHEAD protection. Falling limbs and debris can cause injuries. ***PN CHBM-01***

© 2015 Alamo Group Inc.

CONNECTING OR DISCONNECTING IMPLEMENT SAFETY

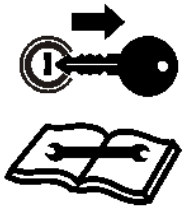			
Stop Tractor Remove Key Read Manual	Crushing Hazard Do Not get under boom when connecting mower head to boom	Stability Hazard Ensure 20% of tractor weight is on front wheels	Stability Hazard Ensure 1500lbs down force on left tire with boom extended

DANGER **TO AVOID SERIOUS INJURY OR DEATH FROM BEING CRUSHED BY TRACTOR OR IMPLEMENT:**

WHEN connecting mower head to the boom:

- **KEEP BYSTANDERS AWAY** from tractor and mower.
- Ensure there is enough room to lift and swing the boom with out hitting objects

BEFORE connecting and disconnecting the mower head or boom:

- **STOP TRACTOR ENGINE**, place transmission into park, engage parking brake and remove key.

WHEN connecting and disconnecting the mower head or boom:

- DO NOT crawl or walk under raised mower head or boom. ***(Refer to Instructions in Operation Section)***

WHEN CONNECTING IMPLEMENT DRIVELINE:(If equipped)

TO AVOID implement driveline coming loose during operation:

- **LUBRICATE** yoke spring locking collar to ensure it freely slides on PTO shaft.
- **SECURELY** seat yoke locking balls in PTO shaft groove.
- **PUSH** and **PULL DRIVELINE** on both the tractor and implement **PTO SHAFTS** to ensure it is **SECURELY ATTACHED.**

TO AVOID broken driveline during operations:

- **CHECK** driveline for proper length between PTO shaft and implement gearbox shaft.***(Refer to Instructions in Operation Section)***
- Drivelines too short can pull apart or disengage.
- Drivelines too long can bottom out.
- Bottoming driveline telescoping assembly will stop sliding and become solid.
- Driveline bottoming can push through support bearings and break off PTO shaft.

CONTACT DEALER if implement driveline does not match Tractor PTO shaft:

- **DO NOT USE PTO ADAPTER.**
  Using a PTO adapter can cause:
- Excessive vibration, thrown objects, blade and implement failures by doubling operating speed.
- Increased working length exposing unshielded driveline areas and entanglement hazards. ***PN CDBM-01***

© 2015 Alamo Group Inc.

THROWN OBJECTS HAZARDS

	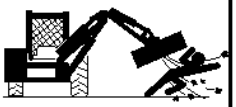	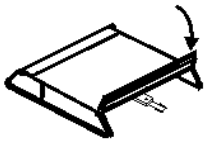		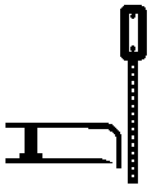
Mower Thrown Objects Hazard	Raised Mower Thrown Objects	Keep mower door closed when traffic comes within 300 feet	Inspect Area remove foreign objects	Do not let blades contact solid objects

DANGER **ROTARY MOWERS CAN THROW OBJECTS 300 FEET OR MORE UNDER ADVERSE CONDITIONS.**

TO AVOID SERIOUS INJURY OR DEATH TO OPERATOR OR BYSTANDERS FROM THROWN OBJECTS:

- KEEP bystanders 300 feet away

STOP MOWING IF PASSERSBY ARE WITHIN 300 FEET UNLESS:

- **All THROWN OBJECT SHIELDING** including, Front and Rear Deflectors, Chains Guards, Steel Guards, Bands, Side Skirts and Skid Shoes in place and in good condition when mowing.
- Mower is close and parallel to ground without exposing blades.
- **MOWING AREA** has been inspected and foreign materials and debris have been removed.
- **DO NOT** shred or mow loose or previously cut material if BYSTANDERS are within 300 feet.
- **PASSERSBY** are inside enclosed vehicle.

INSPECT AREA FOR POTENTIAL THROWN OBJECTS BEFORE MOWING:

- **REMOVE** debris, rocks, wire, cable, metal objects and other foreign material from area.
  Wire, cable, rope, chains and metal objects can be thrown or swing outside deck with great velocity**:**
  1. **MARK** objects that cannot removed.
  2. **AVOID** these objects when mowing.

HIGH GRASS and WEED AREA INSPECTION:

- **INSPECT** for and **REMOVE** any hidden large debris.
- **MOW** at Intermediate height
- **INSPECT** and remove remaining debris
- **MOW** at final height.

MOWER THROWN OBJECT SHIELDING:

- **KEEP** all thrown object shielding including, Front and Rear Deflectors, Chains Guards, Steel Guards, Bands, Side Skirts and Skid Shoes in place and in good condition when mowing.
- **DO NOT OPERATE** with any thrown object shielding missing, damaged or removed.

RIGHT OF WAY (Highway) MOWING

- Stop mowing if any bystander comes within 300 feet of the mower.
- No shielding is 100% effective in preventing thrown objects. To Reduce Possibility of Injury:
  1. **MAINTAIN MOWER SHIELDING**, side skirts, skid shoes, and blades in good operational condition,
  2. **RAISE CUTTING HEIGHT** to **6 INCHES** minimum,
  3. **INSPECT AREA** thoroughly before mowing to **REMOVE** potential **THROWN OBJECT HAZARDS**,
  4. **NEVER ALLOW BLADES to CONTACT SOLID OBJECTS** like wire, rocks, post, curbs, guardrails, or ground while mowing. ***PN TOBM-01***

© 2015 Alamo Group Inc.

THROWN OBJECTS HAZARDS (Continued)

	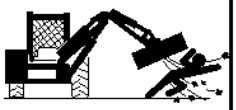	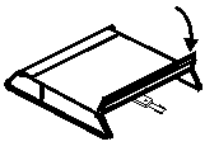		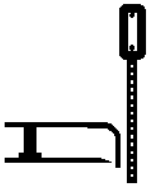
Mower Thrown Objects Hazard	Raised Mower Thrown Objects	Keep mower door closed when traffic comes within 300 feet	Inspect Area remove foreign objects	Do not let blades contact solid objects

MOWER OPERATION:

- **DO NOT** exceed mower's rated Cutting Capacity or cut non-vegetative material.
- **USE ENCLOSED TRACTOR CABS** when two or more mowers are operating in mowing area.
- Do Not mow in areas where bees or insects may attack unless you **WEAR PROTECTIVE CLOTHING** or use enclosed tractor cab.
- **ADJUST** mower head close and parallel to ground without exposing blades.
- **ADJUST** cutting **HEIGHT** to **AVOID BLADE CONTACT** with solid objects like wire, rocks, posts, curbs, guard rails and fixed obstructions.
- **CLOSE** Mower door and stop operating if bystanders come within 300 feet of the mower.
- Keep mower door closed when cutting close to the ground.
- Open door only to cut large brush or tree limbs. Close door immediately after cutting limb.
- **DO NOT** push mower head down onto material to cut it, use the front tips of the mower blades to cut into the material.
- **DO NOT** operate mower when mower is in transport position.
- **STOP MOWING** immediately if blades strike heavy objects, fixed structures, metal guard rails and concrete structures:
  1. **BLADES CAN FAIL** from impact and objects can be thrown with great velocity.
  2. **INSPECT** and **REPLACE** any damaged blades.
  3. **CHECK** blade carrier and **REPLACE** if damaged.
- **DO NOT** mow in standing water **TO AVOID** possible **BLADE FAILURE**.
- **AVOID MOWING** in reverse:
  1. **STOP PTO** and back up mower.
  2. **LOWER** mower, engage **PTO** and mow forward.
- **DISENGAGE** mower head and wait until **BLADES** stop rotating before raising mower to transport position.
- **DO NOT ENGAGE PTO** with mower in transport position.
- **STOP** mowing when **EXCESSIVE VIBRATION** occurs:
  1. **STOP PTO** and tractor **ENGINE.**
  2. **INSPECT** mower for vibration source.
  3. **REPLACE** any damage parts and bent or damaged **BLADES**. ***PN TOBM-02***

© 2015 Alamo Group Inc.

RUN OVER HAZARDS

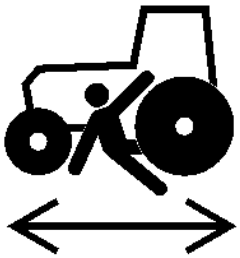		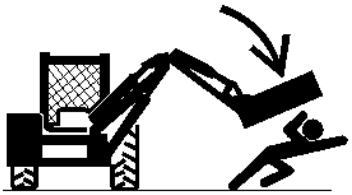
Operator run over hazard	Rider fall off run over hazard	Bystander run over hazard

DANGER **TO AVOID SERIOUS INJURY OR DEATH FROM FALLING OFF TRACTOR OR EQUIPMENT RUN OVER:**

- **USE ROPS** and **SEAT BELT** equipped tractors for mowing operations.
- **KEEP ROPS** locked in **UP** position.
- **ONLY** start tractor while seated in tractor seat.
- **ALWAYS BUCKLE UP** seat belt when operating tractor and equipment.
- **ONLY OPERATE** tractor and equipment while seated in tractor seat.
- **NEVER ALLOW RIDERS** on tractor or implement.
- When not mowing stow Boom and Mower head in transport location before moving.

WHEN MOUNTING AND DISMOUNTING TRACTOR:

- **ONLY** mount or dismount when tractor and moving parts are stopped**.**
- **STOP ENGINE AND PTO,** engage parking brake, lower implement, allow all moving parts to stop and remove key before dismounting from tractor. ***PN ROBM-01***

© 2015 Alamo Group Inc.

PTO ENTANGLEMENT HAZARDS

	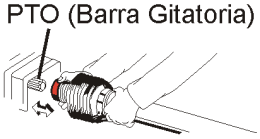	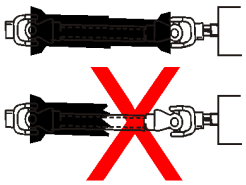	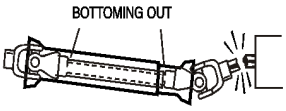
Entanglement hazard Do Not approach or touch a rotating PTO driveshaft	Make sure PTO shaft is securely attached Do Not Use PTO Adapter	DO NOT Operate if PTO shields are damaged or missing	Make sure PTO shafts are proper length

DANGER **KEEP AWAY FROM ROTATING DRIVELINES AND ELEMENTS TO AVOID SERIOUS INJURY OR DEATH:**

STAY AWAY and **KEEP** hands, feet and body AWAY from rotating blades, drivelines and parts until all moving elements have stopped.

- **STOP, LOOK** and **LISTEN** before approaching the mower to make sure all rotating motion has stopped.
- **ROTATING COMPONENTS CONTINUE** to **ROTATE** after the PTO is shut off.

PTO SHIELDING:

TO AVOID SERIOUS INJURY OR DEATH FROM ENTANGLEMENT WHEN OPERATING IMPLEMENT:

- **KEEP PTO** shields, integral driveline shields and input shields installed
- **DO NOT OPERATE** mower without shields and guards in place or missing
- **REPAIR OR REPLACE** if damage, broken or missing
- **ALWAYS REPLACE GUARDS** that have been removed for service or maintenance.
- Do Not use PTO or PTO guard as a step.

TO AVOID broken driveline during operations:

- **CHECK** driveline for proper length between PTO shaft and implement gearbox shaft.***(Refer to Instructions in Operation Section)***
- Drivelines too short can pull apart or disengage.
- Drivelines too long can bottom out.

  Bottoming driveline telescoping assembly will stop sliding and become solid.
- Driveline bottoming can push through support bearings and break off PTO shaft
- **AVOID** sharp turns or lift mower to heights to cause driveline "knocking".
- Lubricate driveshaft-telescoping components weekly.

CONTACT DEALER if implement driveline does not match Tractor PTO shaft:

- **DO NOT USE PTO ADAPTER.**

  Using a PTO adapter can cause excessive vibration, thrown objects, blade and implement failures by doubling operating speed. Increased working length exposing unshielded driveline areas. ***PN PE01***

© 2015 Alamo Group Inc.

MOWER BLADE CONTACT HAZARDS

			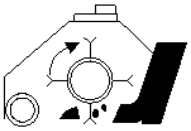		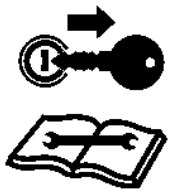
Do not put fingers underneath mower	Do not put hands underneath Flail Mower	Do not put foot underneath mower	Do not put foot underneath Flail Mower	Shearing Hazard from Sickle blades	Stop Tractor Remove Key Read Manual

DANGER **KEEP AWAY FROM ROTATING BLADES TO AVOID SERIOUS INJURY OR DEATH FROM BLADE CONTACT:**

- **STAY AWAY** and **KEEP HANDS, FEET** and **BODY AWAY** from rotating blades, drivelines and parts until all moving elements have stopped.
- **DO NOT** put hands or feet under mower decks
- **STOP** rotating **BLADES** disengage mower switch and PTO and wait for blade to stop rotating before raising mower head.
- DO NOT approach Sickle Bar head until Tractor Engine has been shut off.
- **STOP LOOK** and **LISTEN** before approaching the mower to make sure all rotating motion has stopped. ***PN MBBM-01***

© 2015 Alamo Group Inc.

HIGH PRESSURE OIL LEAK HAZARD

High pressure oil penetrating skin	High pressure oil eroding skin	Using cardboard to check for oil leaks	Tank contents under pressure. Allow oil to cool before slowly removing cap

DANGER **TO AVOID SERIOUS INJURY OR DEATH FROM HIGH PRESSURE HYDRAULIC OIL LEAKS PENERATING SKIN:**

- **DO NOT OPERATE** equipment with oil or fuel leaks.
- **KEEP** all hydraulic hoses, lines and connections in **GOOD CONDITION** and **TIGHT** before applying system pressure.
- **RELIEVE HYDRAULIC PRESSURE** before disconnecting lines or working on the system.
- **REMOVE** and replace hose if you suspect it leaks. Have dealer test it for leaks.

HIGH PRESSURE FLUID LEAKS CAN BE INVISIBLE.

WHEN CHECKING FOR HYDRAULIC LEAKS AND WORKING AROUND HYDRAULIC SYSTEMS:

- **ALWAYS WEAR** safety glasses and impenetrable gloves.
- **USE** paper or cardboard to search for leaks.
- **DO NOT USE** hands or body parts to search for leak.
- **KEEP** hands and body **AWAY** from pin holes and nozzles ejecting hydraulic fluid.
- Hydraulic fluid may cause gangrene if not surgically removed immediately by a doctor familiar with this form of injury.

Use caution when removing Hydraulic Tank cap.

- Tank contents maybe under pressure
- Allow oil to cool before removing cap.
- Relieve oil pressure before removing cap slowly.
- Stay away from hot oil that may spray from tank.

PN HPBM-01

© 2015 Alamo Group Inc.

ELECTRICAL & FIRE HAZARDS

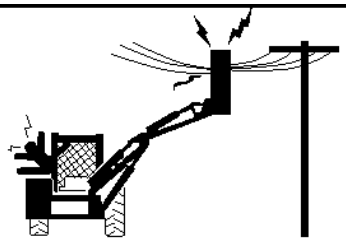		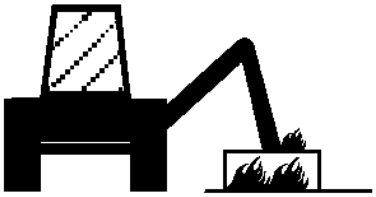
Mower head or Boom contacting overhead electrical lines	Strike and explosion Hazard Blades Contacting Utility or Gas Lines	Fire Hazard Do Not operate near fires. Keep debris away from hydraulic pumps and valves

⚠ DANGER **TO AVOID SERIOUS INJURY OR DEATH FROM ELECTRICAL CONTACT WHEN WORKING AROUND ELECTRICAL POWER LINES, GAS LINES AND UTILITY LINES:**

- **INSPECT** mowing area for overhead or underground electrical power lines, obstructions, gas lines, cables and Utility, Municipal, or other type structure.
- **KEEP** all raised wings at a 10 feet or greater distance from all power lines and overhead obstructions.
- **DO NOT** allow mower to contact with any Utility, Municipal, or type of structures and obstructions.
- **CALL 811** and 1-800-258-0808 for identify buried utility lines.

FIRE PREVENTION GUIDELINES while Operating, Servicing, and Repairing Mower and Tractor to reduce equipment and grass fire Risk:

- **EQUIP** Tractor with a **FIRE EXTINGUISHER**
- **DO NOT OPERATE** mower on a tractor equipped with under frame exhaust
- **DO NOT SMOKE** or have open flame near Mower or Tractor
- **DO NOT DRIVE** into burning debris or freshly burnt area
- **AVOID FIRE IGNITION** by not allowing mower blade to contact solid objects like metal or rock.
- **DO NOT** operate if oil is leaking. Repair oil leak and remove all accumulated oil before operating.
- **CLEAR** any grass clippings or debris buildup around mower hydraulic pumps, valves or tanks.
- **SHUT OFF ENGINE** while refueling. ***PN EFBM-01***

© 2015 Alamo Group Inc.

TRANSPORTING HAZARDS

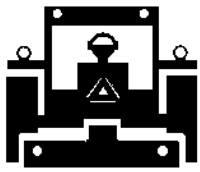		
Use SMV signs and Flashing Lights	Loss of Control Stopping Hazard	Loss of Control Speeding Hazard

⚠WARNING **TO AVOID SERIOUS INJURY AND DEATH WHEN TOWING OR TRANSPORTING EQUIPMENT:**

- **KEEP** transport speed **BELOW** 20 mph to maintain control of equipment.
- **REDUCE SPEED** on inclines, on turns and in poor towing conditions.
- **DO NOT TOW** with trucks or other vehicles.
- **USE** only properly sized and equipped tractor for towing equipment.
- **FOLLOW** all local traffic regulations.

TRACTOR REQUIREMENTS FOR TOWING OR TRANSPORTING IMPLEMENTS:

- **ONLY TRANSPORT** with tractor with **ROPS** in the raised position.
- **USE** properly sized and equipped tractor that exceeds implement weight by at least 20%.
- **KEEP** 20% of tractor weight on front wheels to maintain safe steering.

BEFORE TRANSPORTING OR TOWING IMPLEMENT:

TRACTOR INSPECTION:

- **CHECK** steering and braking for proper operation and in good condition.
- **CHECK SMV** sign, reflectors and warning lights for proper operation and visibility behind unit.
- **CHECK** that your driving vision is not impaired by tractor, cab, or implement while seated in tractor seat.
- **ADJUST** your operating position, mirrors, and implement transport for clear vision for traveling and traffic conditions.

PREPARE IMPLEMENT FOR TRANSPORTING OR TOWING:

- Store Boom and Mower in transport positions and engage transport locks if equipped.

DETERMINE STOPPING CHARACTERISTICS OF TRACTOR AND IMPLEMENT FOR TRANSPORTING OR TOWING:

BRAKING TESTS:

- Stopping distance with implement attached may increase
- Observe **STOPPING** distances increases with increased speeds.
- **DETERMINE** the maximum safe transport speed that does not exceed 20 mph.
- Reduce travel speed in wet or icy roads, stopping distances increase.

DETERMINE MAXIMUM TURING SPEED BEFORE OPERATING ON ROADS OR UNEVEN GROUND:

- **TEST** equipment in slowly increasing speed in turns to determine it can be operated at higher speeds.
- **USE REDUCED** turning speeds in sharp turns to avoid equipment turning over.

WHEN TOWING OR TRANSPORTING EQUIPMENT:

- Always **WEAR SEAT BELT** when operating or transporting mower.
- **USE** low speeds to avoid overturn with raised wings.
- **USE** low speeds and gradual steering on curves, hills, rough or uneven surfaces and on wet roads.
- **TURN ON** tractor **FLASHING WARNING LIGHTS**.
- **ALLOW** clearance for implement swing while turning.

KEEP raised boom mower 10 feet or greater distance from all power lines and overhead obstructions. ***PN THBM-01***

© 2015 Alamo Group Inc.

HAZARDS WITH MAINTENANCE OF IMPLEMENT

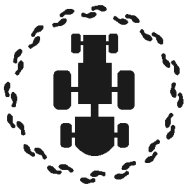		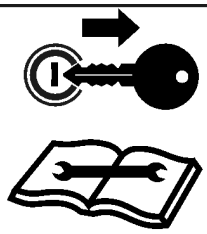		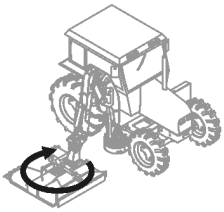
Periodically inspect all moving parts, lubricate drivelines, and tighten all fasteners	Lower mower head to ground or block up before servicing	Stop engine remove key before conducting maintenance	Set mower head securely on the ground before servicing blades	Thrown Objects Hazard Ensure blades rotate clockwise viewed from above mower head

⚠WARNING **AVOID SERIOUS INJURY OR DEATH FROM COMPONENT FAILURE BY KEEPING IMPLEMENT IN GOOD OPERATING CONDITION IN PERFORMING PROPER SERVICE, REPAIRS AND MAINTENANCE.**

BEFORE PERFORMING SERVICE, REPAIRS AND MAINTENANCE ON THE IMPLEMENT:

- **STOP ENGINE AND PTO**, engage parking brake, lower implement, allow all moving parts to stop and remove key before dismounting from tractor.
- **PLACE** implement on ground or securely block up raised equipment. Use large blocks on soft or wet soil.
- **PUSH** and **PULL** Remote Hydraulic Cylinder lever to relieve hydraulic pressure.
- **DISCONNECT Pump solenoid valve or PTO driveline connection before servicing mower head**.
- **WEAR SAFETY GLASSES, PROTECTIVE GLOVES** and follow **SAFETY PROCEDURES** when performing service, repairs and maintenance on the implement:
- Always **WEAR** protective **GLOVES** when handling blades, knives, cutting edges or worn component with sharp edges.
- Always **WEAR GLOVES** and **SAFETY GLASSES** when servicing hot components
- **AVOID CONTACT** with hot hydraulic oil tanks, pumps, motors, valves and hose connection surfaces.
- **SECURELY** support or **BLOCK UP** raised implement, framework and lifted components before working underneath equipment.
- **FOLLOW INSTRUCTIONS** in maintenance section when replacing hydraulic cylinders to prevent component falling.
- **STOP** any implement movements and **SHUT-OFF TRACTOR** engine before doing any work procedures.
- **USE** ladder or raised stands to reach high equipment areas inaccessible from ground.
- **ENSURE** good footing by standing on solid flat surfaces when getting on implement to perform work.
- **FOLLOW** manufacturer's instructions in handling oils, solvents, cleansers, and other chemical agents.
- **DO NOT** change any factory-set hydraulic calibrations to avoid component or equipment failures.
- **DO NOT** modify or alter implement, functions or components.
- **DO NOT WELD** or repair rotating mower components. These may cause vibrations and component failures being thrown from mower.

PERFORM SERVICE, REPAIRS, LUBRICATION AND MAINTENANCE OUTLINED IN IMPLEMENT MAINTENANCE SECTION:

- **INSPECT** for loose fasteners, worn or broken parts, leaky or loose fittings, missing or broken cotter keys and washers on pins, and all moving parts for wear.
- **REPLACE** any worn or broken parts with authorized service parts.
- Inspect mower blade spindle to ensure bearing preload. If loose repair before operating.
- **LUBRICATE** unit as specified by lubrication schedule
- **NEVER** lubricate, adjust or remove material while it is running or in motion.
- **TORQUE** all bolts and nuts as specified.

BLADE INSPECTION:

- Inspect blade carrier and blades daily.
- Check blade and blade carrier BOLT TORQUE daily. Loose bolts can cause blade or blade bolt failures.
- REPLACE, bent, damage, cracked and broken blades immediately with new blades.
- **AVOID** blade failures and thrown broken blades. **DO NOT** straighten, weld, or weld hard-facing blades.

SAFETY SHIELDS, GUARDS AND SAFETY DEVICES INSPECTION:

- **KEEP** all Deflectors, Chain Guards, Steel Guards, Gearbox Shields, and PTO integral shields, Bands, Side Skirts and Skid Shoes in place and in good condition.
- **REPLACE** any missing, broken or worn safety shields, guards and safety devices.
- Engine Exhaust, some of its constituents, and certain vehicle components contain or emit chemicals known to the state of California to cause cancer, birth defects or other reproductive harm.
- Battery posts, terminals and related accessories contain lead and lead compounds, chemicals known to the state of California to cause cancer, birth defects or other reproductive harm. ***PN HMBM-01***

© 2015 Alamo Group Inc.

PARTS INFORMATION

PARTS INFORMATION

Tiger mowers use balanced and matched system components for blade carriers, blades, cuttershafts, knives, knife hangers, rollers, drivetrain components, and bearings. These parts are made and tested to Tiger specifications. Non-genuine "will fit" parts do not consistently meet these specifications. The use of “will fit” parts may reduce mower performance, void mower warranties, and present a safety hazard. Use genuine Tiger mower parts for economy and safety. (SPTM-1)

SEE YOUR TIGER DEALER

Operator’s & Parts Manuals

www.algqr.com/tpm

© 2015 Alamo Group Inc.

Decal Location

NOTE: Tiger supplies safety decals on this product to promote safe operation. Damage to the decals may occur while in shipping, use, or reconditioning. Tiger cares about the safety of its customers, operators, and bystanders, and will replace the safety decals on this product in the field, free of charge (Some shipping and handling charges may apply). Contact your Tiger dealer to order replacement decals.

Boom Arm

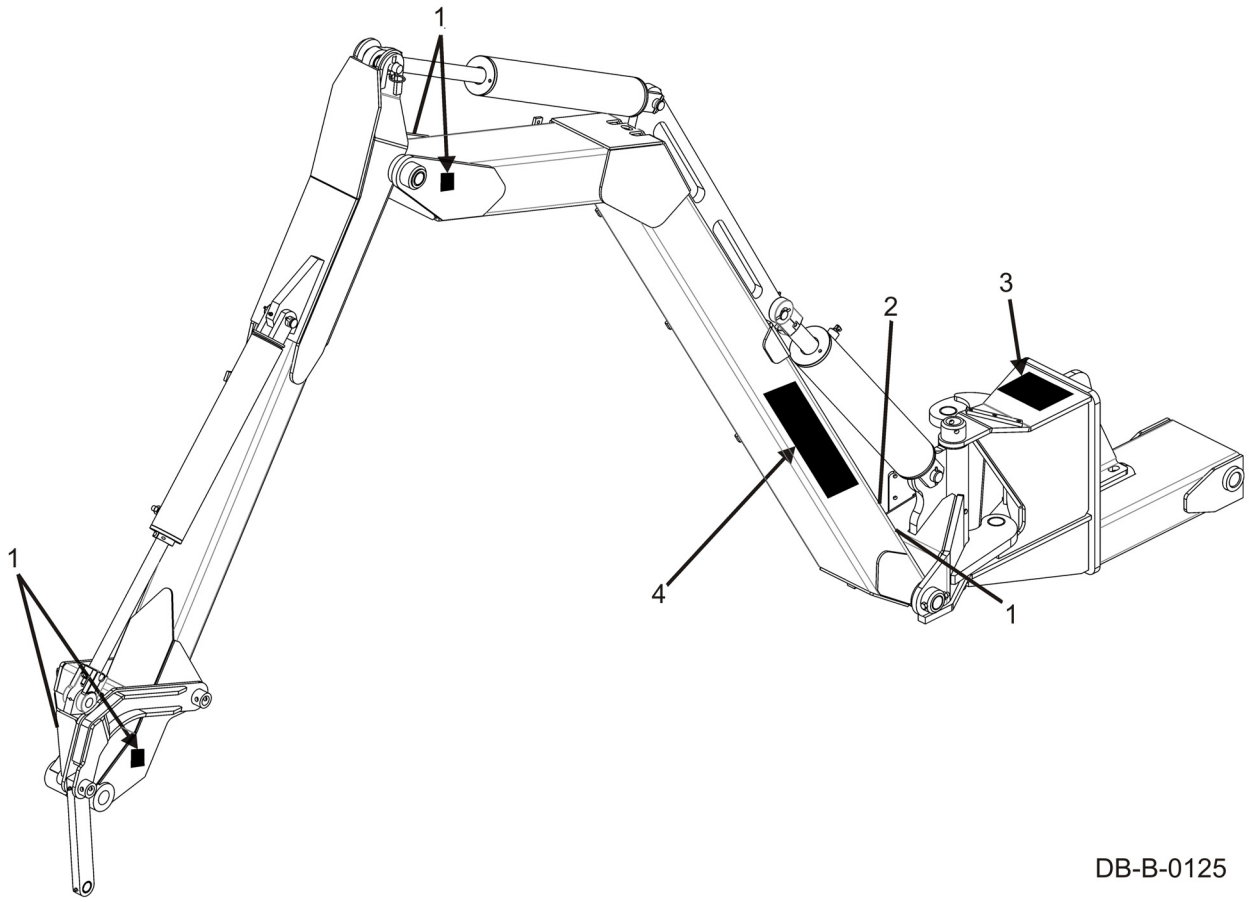

DB-B-0125

ITEM	PART NO.	QTY.	TYPE	DESCRIPTION
1.	02962764	5	WARNING	Pinch Points
2.	02965262	1	WARNING	Hydraulic Oil Hazard
3.	02962765	1	DANGER	Crushing Hazard
4.		1	LOGO	Name

© 2015 Alamo Group Inc.

50” & 60” Rotary

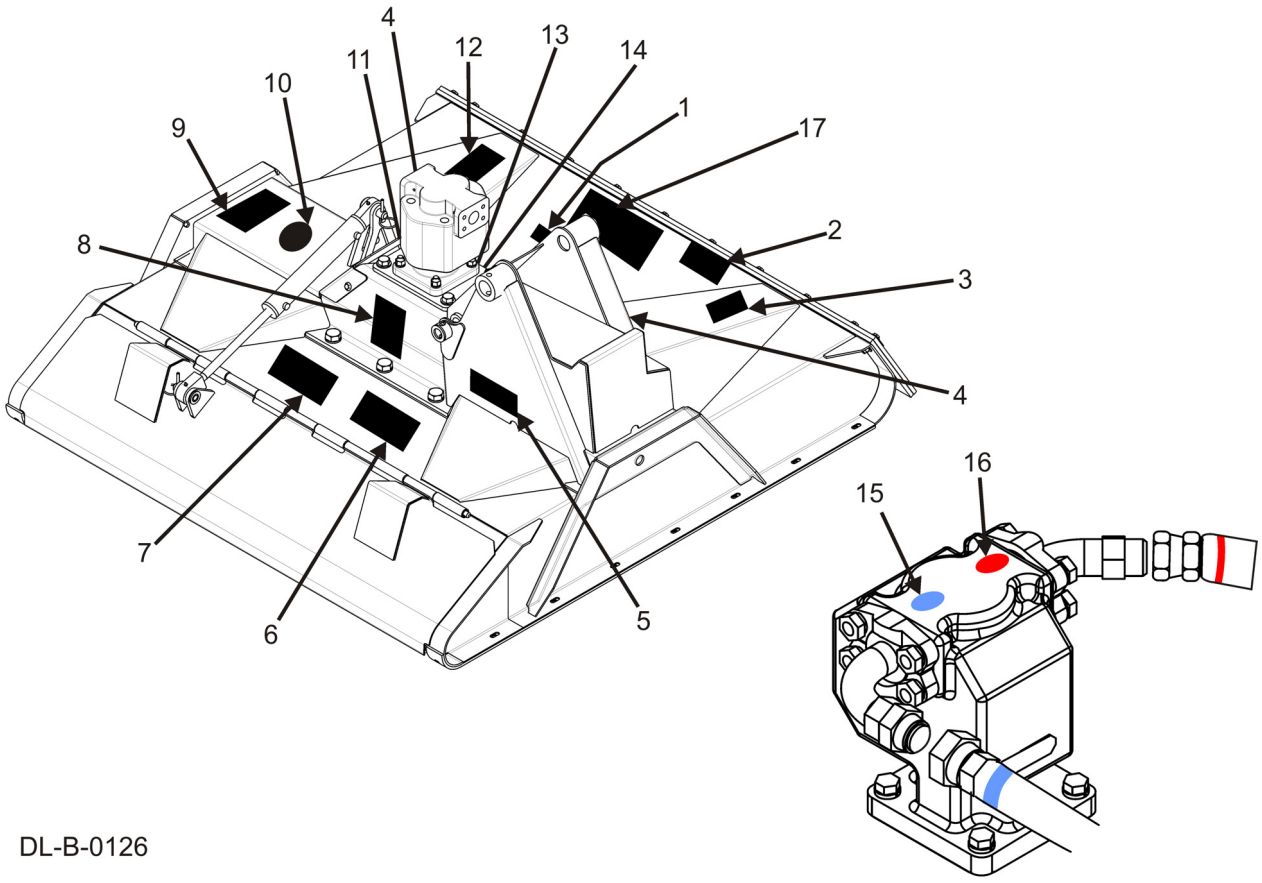

DL-B-0126

ITEM	PART NO.	QTY.	TYPE	DESCRIPTION
1.	6T3237	1	WARNING	Replace Blades
2.	24028	1	WARNING	Thrown Object Hazard
3.	D637	1	WARNING	Disconnect Hydraulic Solenoid
4.	42399	2	REFLECT	Red Reflector
5.	4240006	1	REFLECT	Amber Reflector
6.	D668	1	INSTRUCT	Lubrication Chart
7.	33224	1	DANGER	Blades, Thrown Object
8.	D619	1	WARNING	Blade Rotation
9.		1	LOGO	Made in the USA
10.		1	LOGO	Tiger Genuine Parts
11.	22839	1	INSTRUCT	Use Hand Grease Gun
12.	32709	1	WARNING	Use Genuine Tiger Parts
13.	6T3221	1	INSTRUCT	Lubrication Instructions
14.	nfs	1	SERIAL PLATE	Serial Number Plate
15.	06550058	1	INSTRUCT	Blue Dot
16.	06550057	1	INSTRUCT	Red Dot
17.		1	LOGO	Name

© 2015 Alamo Group Inc.

50”& 63” Flail

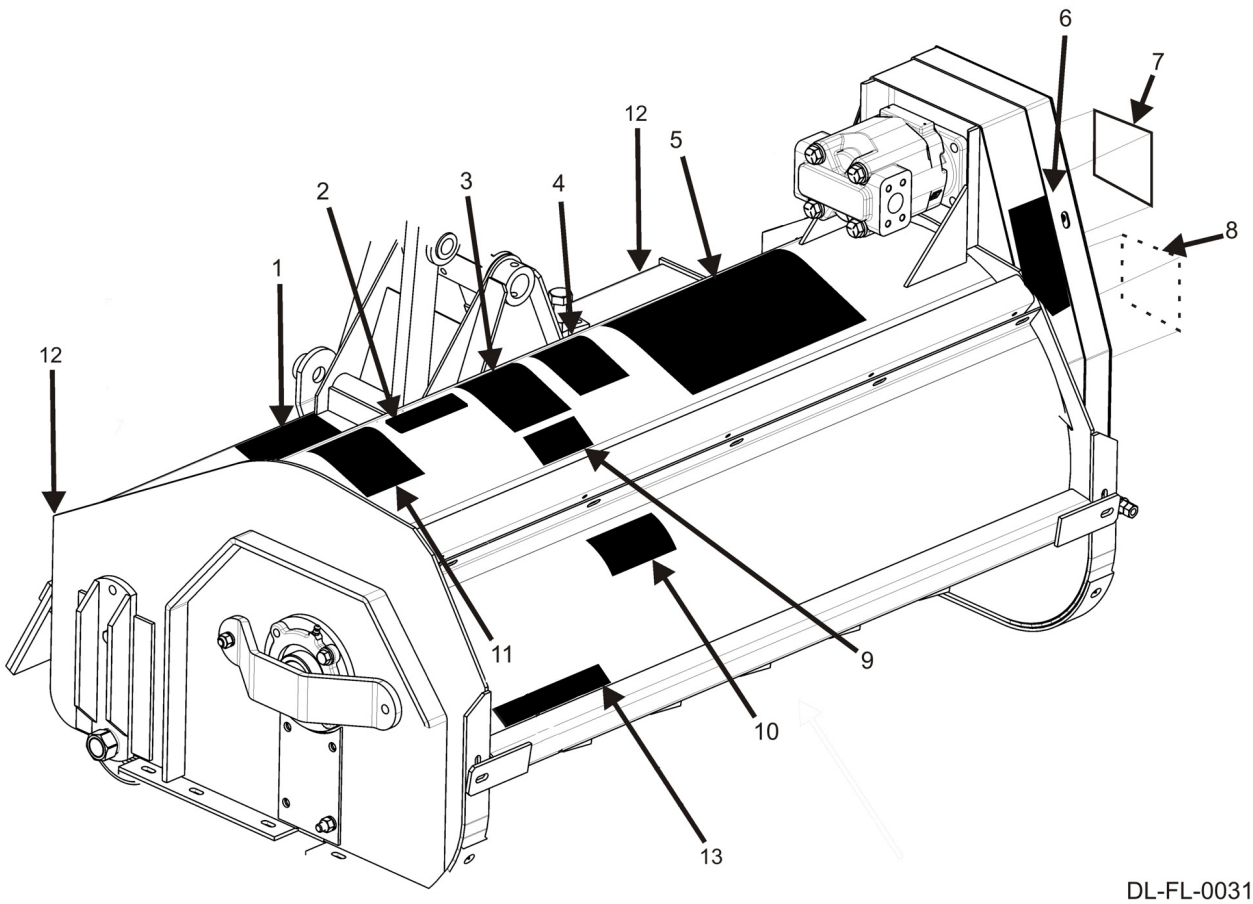

DL-FL-0031

ITEM	PART NO.	QTY.	TYPE	DESCRIPTION
1.	24028	1	DANGER	Thrown Object Hazard,Deflectors
2.	32709	1	WARNING	Use Genuine Tiger Parts
3.	33224	1	DANGER	Blades, Thrown Object
4.	D637	1	WARNING	Disconnect Hydraulic Solenoid
5.		1	LOGO	Tiger Logo
6.	00758194	1	WARNING	Pinch Point Hazard
7.		1	LOGO	50” Logo
		1	LOGO	63” Logo
8.	D646	1	DANGER	Guard Missing, Do Not Operate
9.	D655	1	INSTRUCT	Lube Chart
10.	TB1011	1	DANGER	Thrown Object Hazard, Shield
11.	6T3236	1	LOGO	Made in the USA
12.	42399	2	REFLECT	Red Reflector
13.	4240006	1	REFLECT	Amber Reflector
14.	nfs	1	SERIAL PLATE	Serial Number Plate

© 2015 Alamo Group Inc.

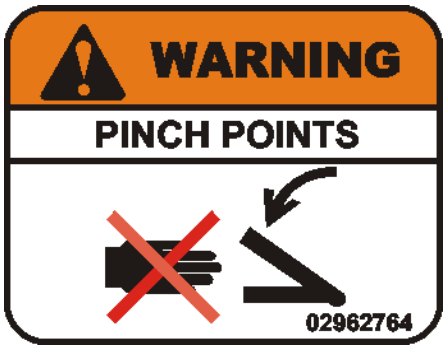

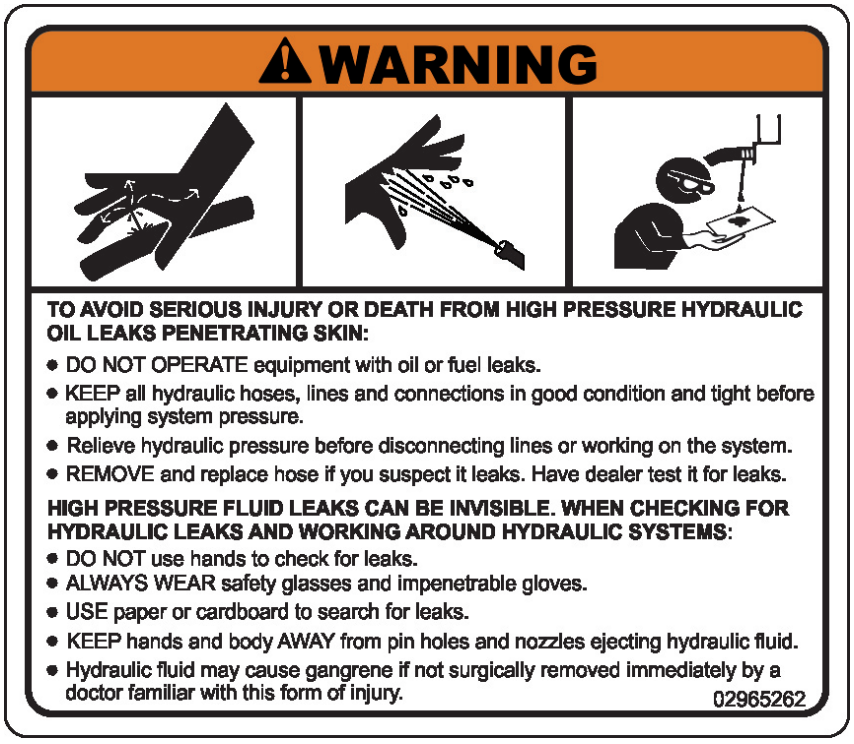

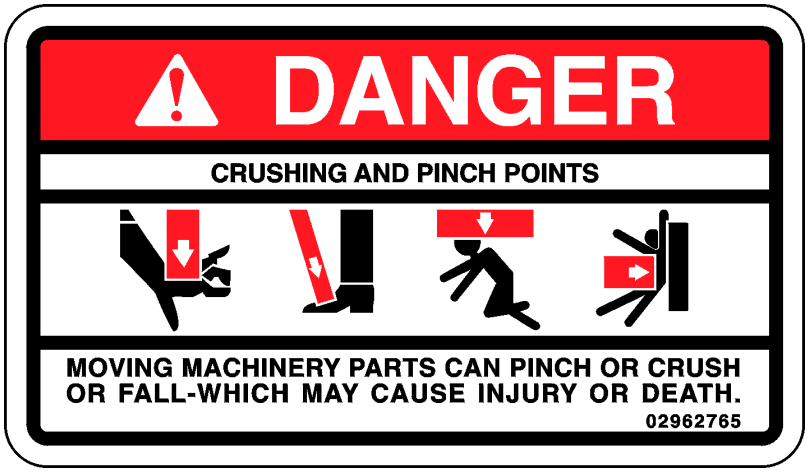

© 2015 Alamo Group Inc.

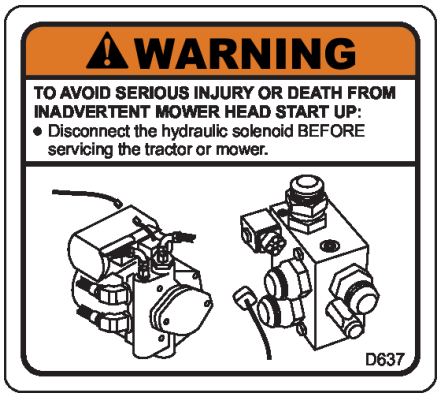

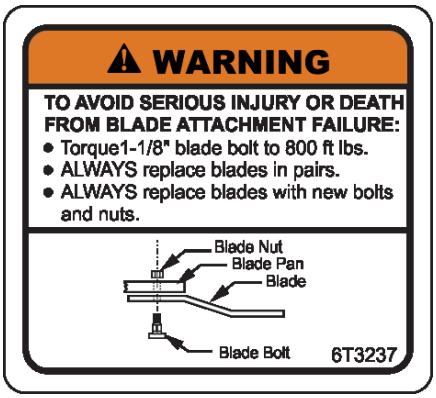

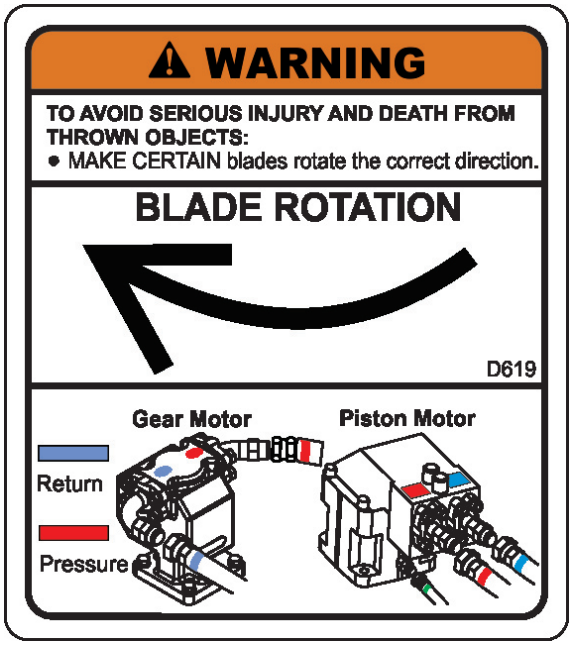

© 2015 Alamo Group Inc.

© 2015 Alamo Group Inc.

⚠ WARNING

Non-genuine parts can fail catastrophically.
TO AVOID SERIOUS INJURY OR DEATH:

- ONLY use genuine TIGER replacement parts.
- Non-genuine parts can fail creating hazardous conditions for operator and bystanders.

Contact local dealer or TIGER about repair parts at:

3301 N. LOUISE AVE.,
SIOUX FALLS, SD 57107
Customer Service: 800-843-6849.
Email: feedback@tiger-mowers.com

www.algqr.com/tpm

32709_1

IMPORTANT

BE AWARE
BE ALERT
BE ALIVE

BE TRAINED
Before Operating this Mower

To prevent serious injury to yourself and/or bystanders, be trained in Safe Mowing Practices. Alamo Group Companies as well as AEM and FEMA provide training material that is critical for your Safety and the Safety of others when operating this equipment. Make these Safety Procedures an important part of every workday. Read and understand the Operator's Manual. Do not let untrained individuals operate this equipment. Contact your Dealer, AEM (www.aem.org), FEMA (314-878-2304, www.FarmEquip.org), or Alamo Group (www.Alamo-Group.com) for information on training material or courses that provide training in Safer Operating Practices for Mowers.

www.algqr.com/tbv

32709_2

32709

© 2015 Alamo Group Inc.

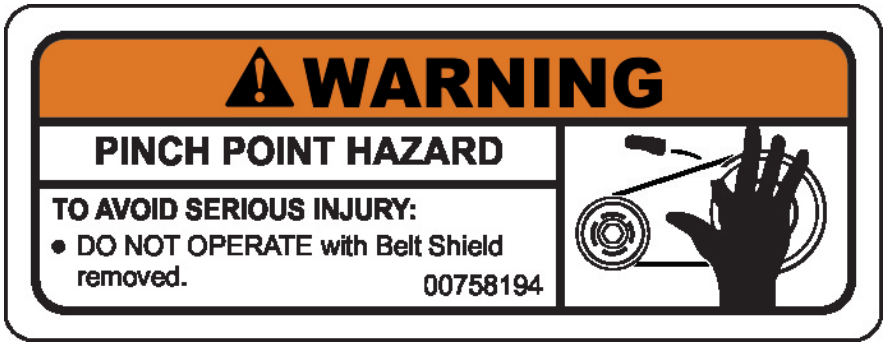

© 2015 Alamo Group Inc.

Federal Laws and Regulations

This section is intended to explain in broad terms the concept and effect of federal laws and regulations concerning employer and employee equipment operators. This section is not intended as a legal interpretation of the law and should not be considered as such.

Employer-Employee Operator Regulations

U.S. Public Law 91-596 (The Williams-Steiger Occupational and Health Act of 1970) OSHA

This Act Seeks:

"...to assure so far as possible every working man and woman in the nation safe and healthful working conditions and to preserve our human resources..."

DUTIES

Sec. 5 (a) Each employer-

(1) shall furnish to each of his employees employment and a place of employment which are free from recognized hazards that are causing or are likely to cause death or serious physical harm to his employees;

(2) shall comply with occupational safety and health standards promulgated under this Act.

(b) Each employee shall comply with occupational safety and health standards and all rules, regulations and orders issued pursuant to this Act which are applicable to his own actions and conduct.

OSHA Training Requirements

Title 29, Code of Federal Regulations Part 1928.57(a)(6). **www.osha.gov**

Operator instructions. At the time of initial assignment and at least annually thereafter, the employer shall instruct every employee who operates an agricultural tractor and implements in the safe operating practices and servicing of equipment with which they are or will be involved, and of any other practices dictated by the work environment.

Keep all guards in place when the machine is in operation;

Permit no riders on equipment

Stop engine, disconnect the power source, and wait for all machine movement to stop before servicing, adjusting, cleaning or unclogging the equipment, except where the machine must be running to be properly serviced or maintained, in which case the employer shall instruct employees as to all steps and procedures which are necessary to safely service or maintain the equipment.

Make sure everyone is clear of machinery before starting the engine, engaging power, or operating the machine.

Employer Responsibilities:

To ensure employee safety during Tractor and Implement operation, it is the employer's responsibility to:

1. Train the employee in the proper and safe operation of the Tractor and Implement.
2. Require that the employee read and fully understand the Tractor and Implement Operator's manual.
3. Permit only qualified and properly trained employees to operate the Tractor and Implement.
4. Maintain the Tractor and Implement in a safe operational condition and maintain all shields and guards on the equipment.
5. Ensure the Tractor is equipped with a functional ROPS and seat belt and require that the employee operator securely fasten the safety belt and operate with the ROPS in the raised position at all times.
6. Forbid the employee operator to carry additional riders on the Tractor or Implement.
7. Provide the required tools to maintain the Tractor and Implement in a good safe working condition and provide the necessary support devices to secure the equipment safely while performing repairs and service.
8. Require that the employee operator stop operation if bystanders or passersby come within 300 feet.

Child Labor Under 16 Years of Age

Some regulations specify that no one under the age of 16 may operate power machinery. It is your responsibility to know what these regulations are in your own area or situation. (Refer to U.S. Dept. of Labor, Employment Standard Administration, Wage & Home Division, Child Labor Bulletin #102.)

© 2015 Alamo Group Inc.

ASSEMBLY SECTION

ASSEMBLY

Before attempting to mount your Tiger mower, it is important to read and understand all of the safety messages in the Safety Section of this manual.

Check complete shipment list against the packing list to make sure there are no shortages. Make certain the tractor model is the appropriate one for the mower received!

⚠WARNING Always use a floor jack, hoist or fork lift to lift and raise heavy parts.

Read and understand the entire Assembly Section instructions before attempting to mount your Tiger mower. Refer to the Parts Section of this manual for detailed illustrations to locate all parts. *(ASM-C-0001)*

TRACTOR PREPARATION

A. Remove right and left hand steps.

B. Disconnect battery cables from both batteries.

C. Remove engine side panels, or raise hood to access front pulley.

D. Remove plugs from tractor casting where mainframe and pump mount will be attached.

E. Remove any front weights and weight supports.

F. Raise the tractor onto jack-stands and remove the right and left rear wheels.

(ASM-JD-0001)

CRANKSHAFT ADAPTER

If necessary, remove the four capscrews from the crankshaft pulley. Then install the crankshaft adapter to the pulley with capscrews and lockwashers as shown in the Parts Section. *(ASM-JD-0051)*

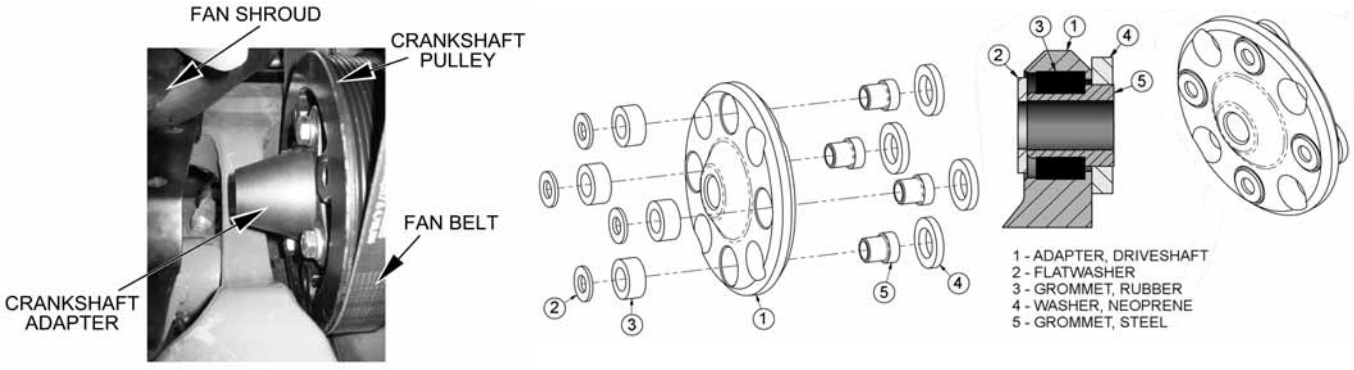

FRONT CRANKSHAFT PULLEY

Tiger has found that the front crankshaft pulley used by John Deere will not allow for the installation of a front drive system. You will need to order a different pulley, washer and bolt from John Deere to allow for a front drive to be installed on your tractor.

Inspect the front pulley on your tractor to verify you have the correct pulley needed to mount the spacer plate. If your pulley has the (4) four holes needed to mount the spacer, your pulley is the correct one needed. If your pulley does not have the (4) four holes in the pulley, you will need to order the correct pulley, washer and bolt from John Deere.

PARTS REQUIRED TO PURCHASE FROM JOHN DEERE:
Pulley from JD - R516320
Washer from JD - R517237
Bolt from JD - R516648
Torque on the pulley bolt with Loctite is 369 lb-ft.

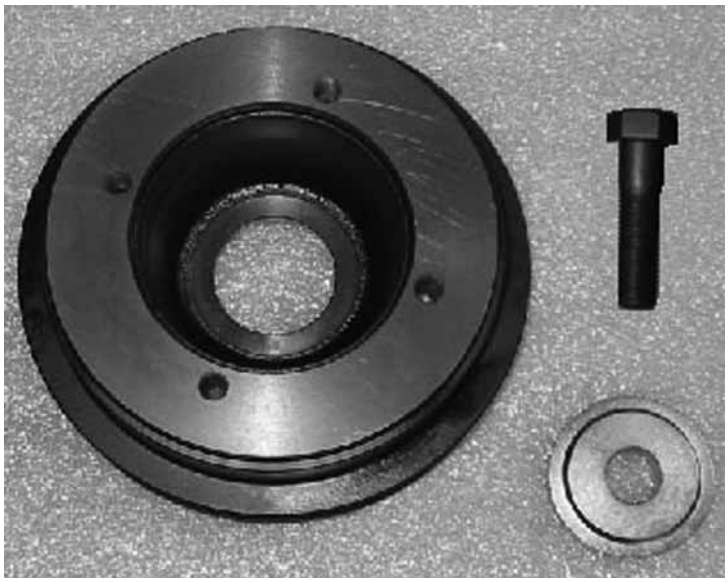

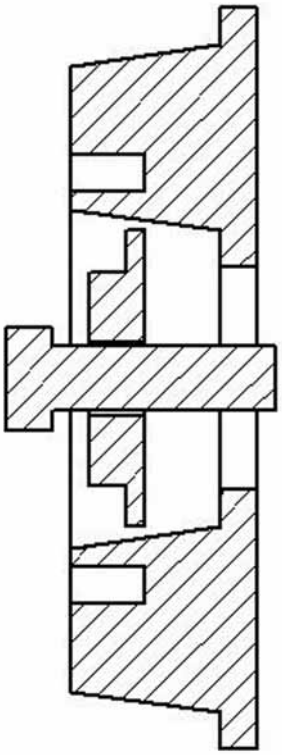

Solution:

1. Clean nose of crankshaft using TY16285 clean and cure primer.
2. Apply a light 2-3mm bead of TY15969 retaining compound around the leading edge of the crankshaft nose.
3. Dip damper mounting capscrew in clean SAE30 engine oil (Always use a new capscrew).
4. Position damper/pulley on the crankshaft and thread capscrew up tight (do not rely on the capscrew to pull the pulley straight onto the taper).
5. Tighten capscrew to specification 500Nm (369lb-ft) (the engine will most likely have to be pinned).
6. Measure run-out on the pulley, spec is 0.003ò or less.

(ASM-JD-0080)

DRIVESHAFT AND FRONT PUMP MOUNTING

Install spacer plate on tractor engine using bolts and lockwashers as shown in Parts Section. Grease sleeve section of the driveshaft and install from the side of the engine compartment. Once you have the sleeve section in place, bolt to spacer plate using bolts and lockwashers as shown in Parts Section. Install shaft end of driveshaft through opening and into driveshaft sleeve. Shaft and sleeve yokes should be aligned, if shaft does not insert easily in sleeve, turn shaft 180Á, and then install. Align the notches on the shaft and yoke tube as shown in picture below. **Shaft end must be installed in correct orientation, failure to do so may result in damage to tractor and/or driveshaft.** After installation of shaft end, install pump mount. Next, install pump. After pump is secured, install driveshaft in to pump shaft. The end of driveshaft should be no more than 1/2ò away from contact with pump housing. Tighten crimping bolt on driveshaft. Lube driveshaft and check all hoses, flanges, the pump, pump mount, driveshaft and mounting plate to ensure all fasteners are tightened before operation.

CAUTION: DO NOT START THE TRACTOR UNTIL ALL HOSES ARE ATTACHED, TANK IS FILLED WITH PROPER OIL AND BALL VALVES ARE OPEN! STARTING AT THIS TIME WILL CAUSE SERIOUS DAMAGE TO THE PUMP. *(ASM-JD-0007)*

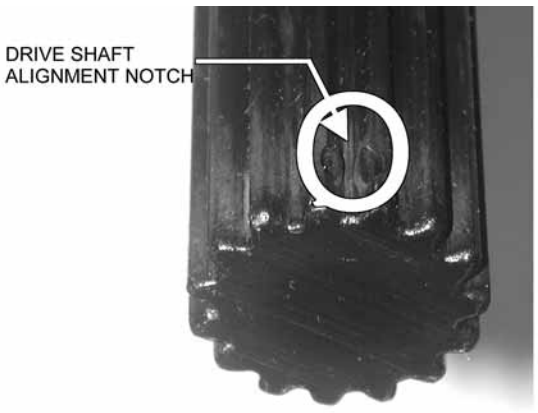

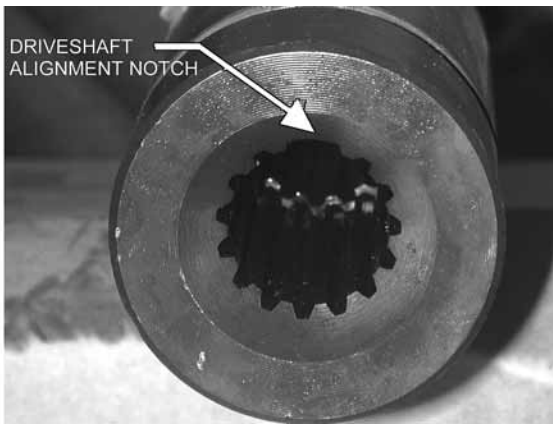

ADJUSTING REAR WHEELS

Raise rear of tractor onto jack-stands. **Follow the instructions in the tractor owner's manual for adjusting tires and rims**. The back wheels MUST be adjusted to the widest setting. NOTE: This may require switching the wheels to opposite sides of tractor. Also take note of any width restrictions when transporting by trailer. (For ease of installation, it is best to leave the rear wheels removed during installation of the mower.) *(ASM-B-0001)*

POLYCARBONATE SAFETY WINDOW

NOTE: Installing a boom mower requires that all of the right side windows be replaced or protected with a polycarbonate window. This should be done before mounting the mainframe.

1. Disconnect gas shock at door. Remove the right side cab door/window glass from tractor cab by removing hinge pins. Also, remove rear right side window.
2. Remove the existing hardware and discard factory glass door and window.
3. Place small bead of adhesive seal in the bottom of the trim lock bubble seal.
4. Install trim lock bubble seal on polycarbonate starting at the center bottom horizontal portion.
5. Install existing hardware removed from glass door and window on the polycarbonate.
6. Install the polycarbonate assembly in the cab with existing and supplied hardware.
7. Place the retaining brackets on the upper front and lower front (if applicable) of the cab door/window with the 8mm capscrews.
8. Place the last bracket at the bottom of the door by the fender as shown in the illustration below. Hold the bracket in place and mark the door jam.
9. Drill a 21/64ò hole in the door jam for the 5/16ò capscrew and mount the bracket.
10. Install the right rear poly window into place where the factory window was removed (if applicable). *(ASM-JD-0052)*

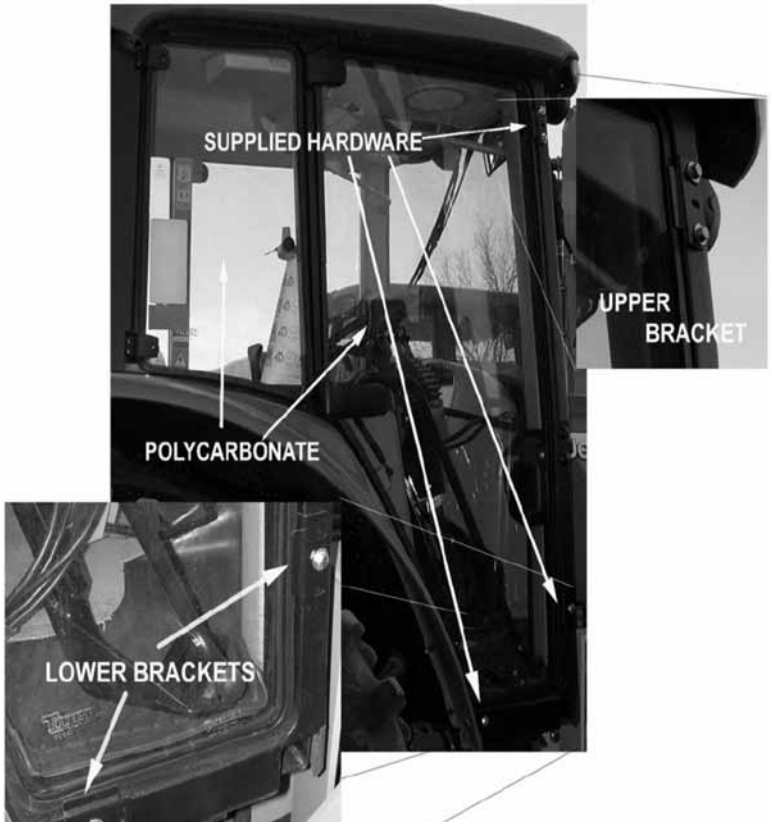

TIGER TUBE GUIDE INSTALLATION

Before the Tiger mainframe can be installed on JD6145-55M/R tractors, some steps are necessary. First, portions of the heat shield need to be temporarily removed from the tractorôs exhaust, as shown in the photos below. This will allow the replacement of the John Deere part securing the preformed tubes running along the right side of the tractor. The John Deere part shown should be replaced with the provided Tiger part #06411947. This will allow adjustment of the tube clamps. This is necessary for the mainframe to be installed without damaging the tubes. Remove the John Deere part and replace it with the Tiger part using two provided bolts #06530005. After replacing the John Deere tube guide with the Tiger part, replace the exhaust heat shield. *(ASM-JD tube bracket)*

When removing heat shield parts from the tractor exhaust, save all hardware to re-install the heat shield after the John Deere tube bracket has been replaced

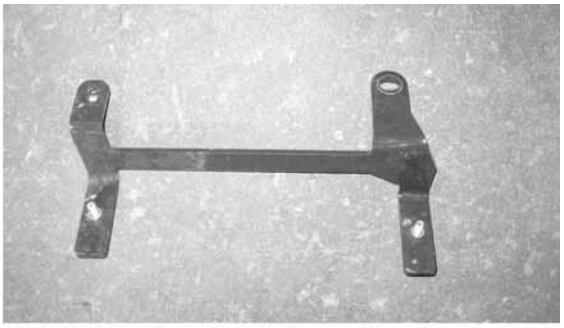

John Deere bracket to be replaced

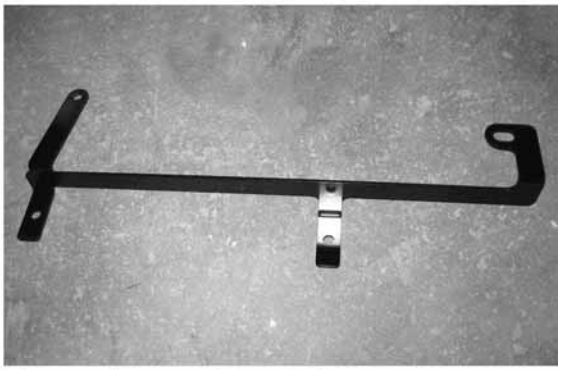

Tiger replacement bracket

MOUNTING PLATE INSTALLATION

Before installing the right hand mount plate, locate the left hand mount plate and install bolt #06530237, washers #33880 and nut #06531008 in the hole shown in the photo below BEFORE mounting the plate on the tractor. Then install the right hand plate with crossbeam. The holes between the left hand plate and the crossbeam should match, and the pre-installed bolt should go through the crossbeam when the parts are brought together. With both plates in place install the remaining bolts, washers and nuts. *(ASM-JD mount plate)*

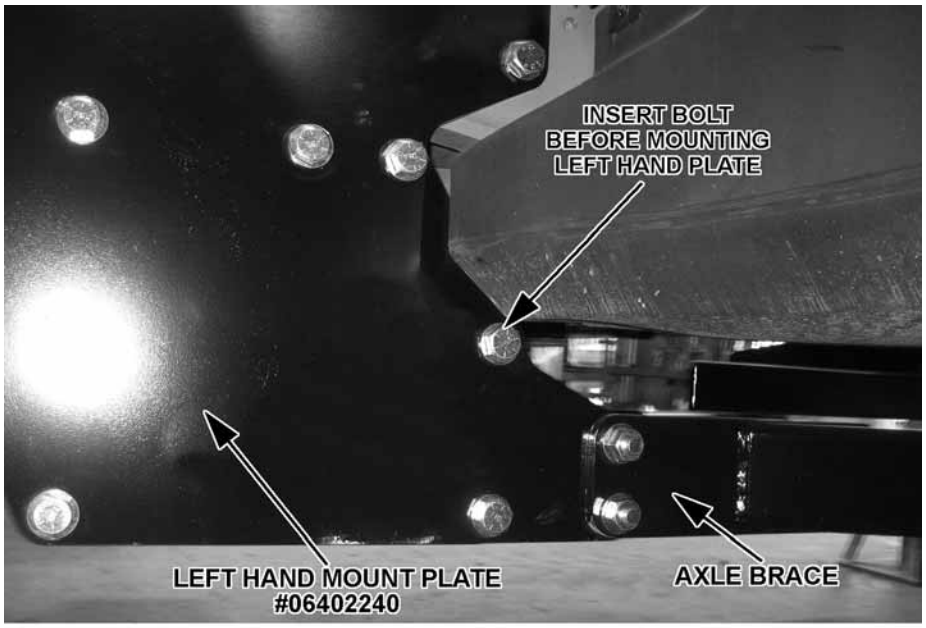

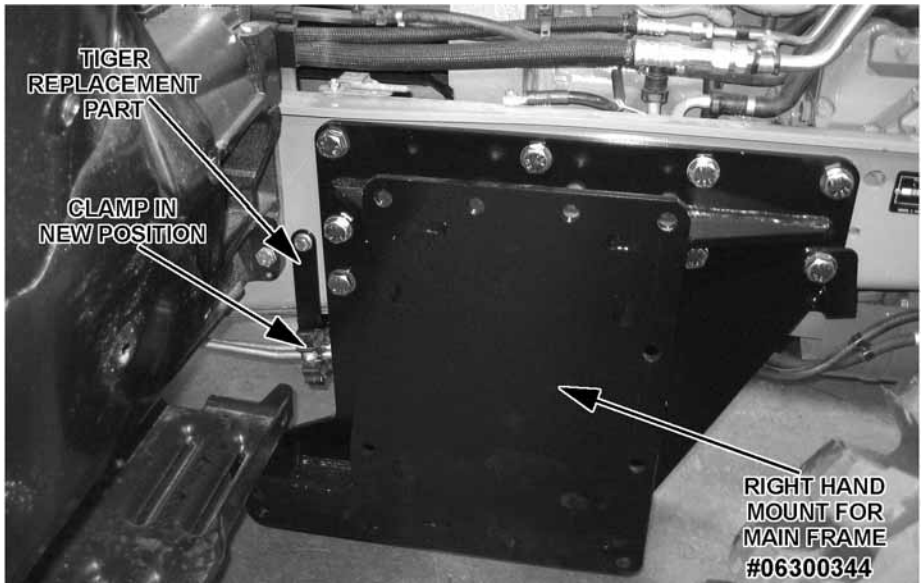

SIDE MIRROR MOUNTING

Disassemble the right side mirror bracket. Cut the square rod and pipe (shown in picture below) 6-1/4ù Assemble them together. Mount the right mirror bracket and hardware on the upper right corner of the tractor cab as shown in picture below. Refer the Parts Section--safety screen, cab for hardware details. *(ASM-JD7220-0001)*

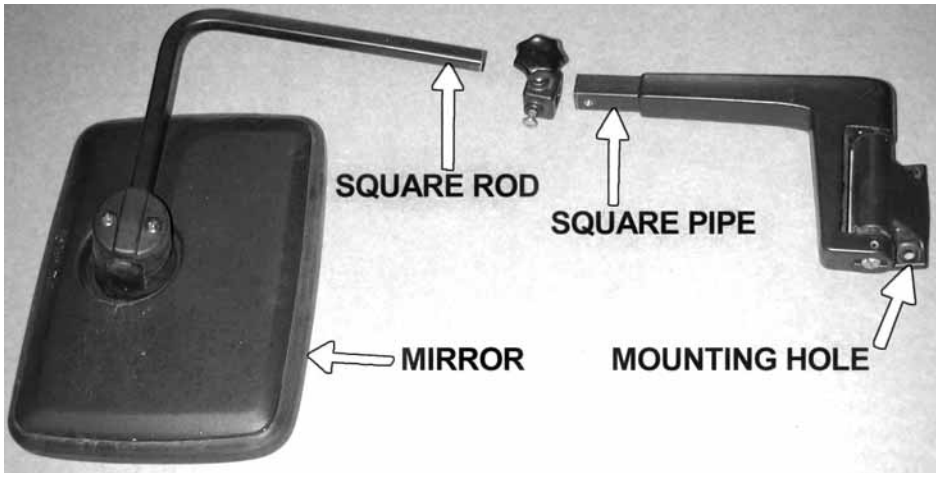

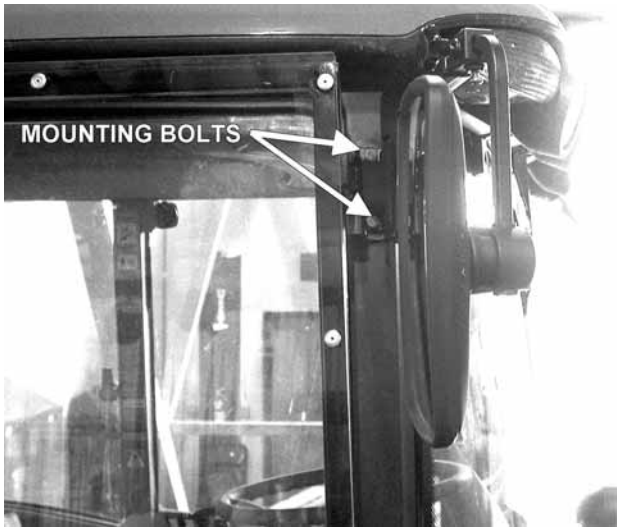

MAINFRAME INSTALLATION

With an overhead hoist and / or jack-stands, raise one side of the frame up to the correctly matching mounting holes. Install capscrews and other hardware to secure the sides of the mainframe to the tractor casting, as shown on the tractor mount kit page in the Parts Section. DO NOT tighten at this time. Remove the capscrews one at a time and apply a thread locking agent. Reinsert the capscrews and tighten / torque to values noted in the torque chart located in the Maintenance Section of this manual. *(ASM-C-0003)*

SWITCHBOX WIRING

Power for the switchbox is accessed through the port located on the right rear of the cab. A John Deere plug is used, part number RE67651. DO NOT connect the plug to the cab port until the wiring is completed. The wires in the plug are colored RED, BLACK and ORANGE. The RED wire will always be hot, so it needs to be capped. Attach connector 34538 to end of RED wire and tape wire back on itself. The BLACK and ORANGE wires are hot when tractor key is turned to ñon.ò Connect the BLACK wire of the plug to the BLACK wire from the switchbox. Then connect the ORANGE wire of the plug to the RED wire from the switchbox. **IMPORTANT: In some cases the red and orange wires may be switched.** ALWAYS test the wires to be certain which wire is which.

The two GREEN wires must be connected to the neutral safety wire by cutting the neutral safety wire and connecting one GREEN wire to one end and the second GREEN wire to the other. Refer to the switchbox schematic and wiring diagram for additional information.

The Neutral Safety wire is a brown wire located under steering column. Cut a slot in the right side of column to access, WATCH OUT for existing wires.

After connecting the power to the switchbox, route the white wire along the cables or wires to the solenoid valve. *(ASM-JD-0245)*

WEATHER-PACK / METRI-PACK ASSEMBLY

These instructions apply to both Weather-Pack and Metri-Pack connectors.

NOTE: Use the specific tool for the type of connector you are assembling.
(ASM-C-0009)

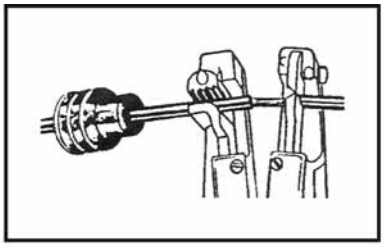

1. Apply seal to cable, before stripping insulation.

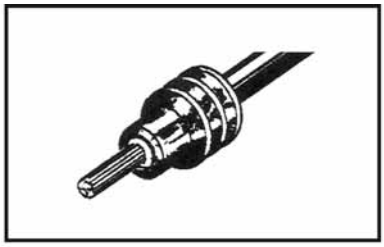

2. Align seal with cable insulation.

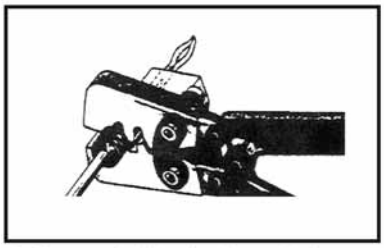

3. Put terminal in crimping tool, then position wire and seal in place.

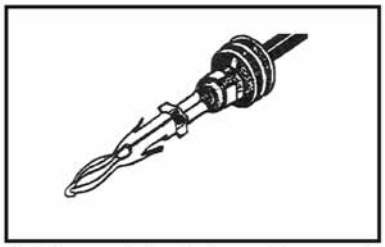

4. Crimp and visually inspect for a good crimp before installing in connector body.

HYDRAULIC PORTS

These ports are located at the rear of the tractor, under the lift valve, where the valve mounting bracket attaches to the tractor. The load sense port is on top, then the pressure and finally the return port, as shown in the image below. Refer to the Parts Section for additional information. *(ASM-JD60-7030-0004)*

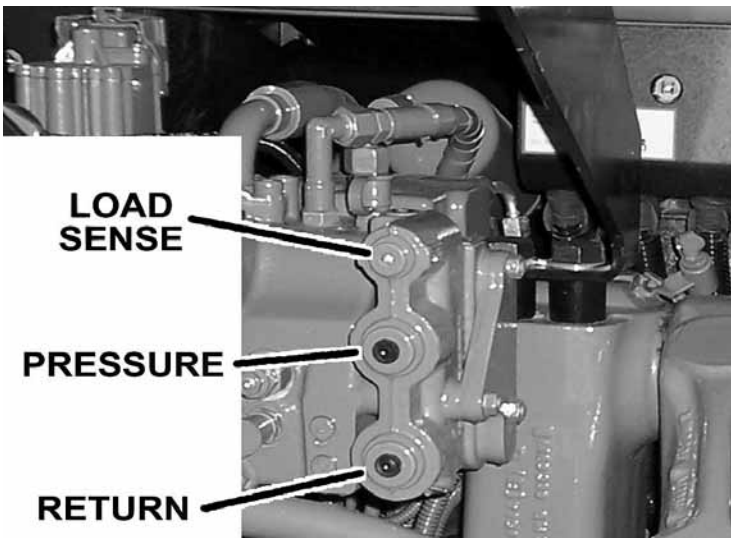

PRESSURE LINE INSTALLATION

The hydraulic pressure line will be plumbed into the rear of the tractor remote valve. Locate the pressure port on the rear remotes and remove the plug (refer to the Hydraulic Ports illustration and the Parts Section pages for position of the pressure port). After the plug is removed install 27mm adapter. Next, connect a 1/2òhose from the tractor remote valve to the Tiger valve. *(ASM-27mmPRESSURE-0001)*

RETURN LINE INSTALLATION

The return line will be plumbed next to the pressure line on the tractor remote valve. Locate the return port and remove the plug (refer to the Hydraulic Ports illustration and the Parts Section for the position of the return port). After the plug is removed install 27mm adapter or elbow. Next, connect a 1/2òhose from the tractor remote valve to the Tiger valve. *(ASM-27mmRETURN-0001)*

LOAD SENSE LINE INSTALLATION

The load sense line will be plumbed into the bottom of the tractor remote valve (refer to the Hydraulic Ports illustration and the Parts Section pages for the position of the load sense port). Locate the plug on the tractor rear remotes for the load sense, and remove the plug. Install a 14mm adapter or elbow and run a 1/4òhose from the remotes to the Tiger valve. Refer to the Parts Section pages for an exploded diagram of the tractor remote valve hookup.
(ASM-14mmLOAD SENSE-0001)

WHEEL WELL HOSE ROUTING

Hoses travel along the right hand wheel well from the lift valve to the mainframe and boom. Hose clamps #06520536 are used to route the hoses as shown below. Clamps 1 and 2 (near the lift valve) use 1/4ò x 1ò bolts #21530, flatwashers #22014 and nylock nuts #21527. Hose clamp 3 uses 3/8ò x 1-1/2ò bolt #21632, flatwashers #22016 and nylock nut #21627. Place as many hoses in the clamp as fit without compromising pressure. Any hoses that don't fit into the clamp are to be secured to the others with zip ties. For protection of hoses in contact with metal edges, wrap hoses with split hose sections. Use zip ties between the clamps as needed.

(ASM-JD 6145 wheel well hose routing)

VALVE MOUNTING

The mounting bracket for JD 6xxxR series tractors features two long legs which need to be attached as shown in the photo below. Secure the bracket to the tractor with hardware shown in the Parts Section of the manual. Align the holes for the cables on the Husco control valves and center the Danfoss valve on the valve plate. Then align the holes on the valve with the plate holes and secure the lift valve on top of the mounting plate. Route the hydraulic lines from the lift valve to the hydraulic cylinders as noted on the lift valve page of the Parts Section. Install the control cables to the valve and the mounting plate on the Husco valves. On the Danfoss valves, attach the electrical control cables. *(ASM-JD7X30-0001 JD6140R)*

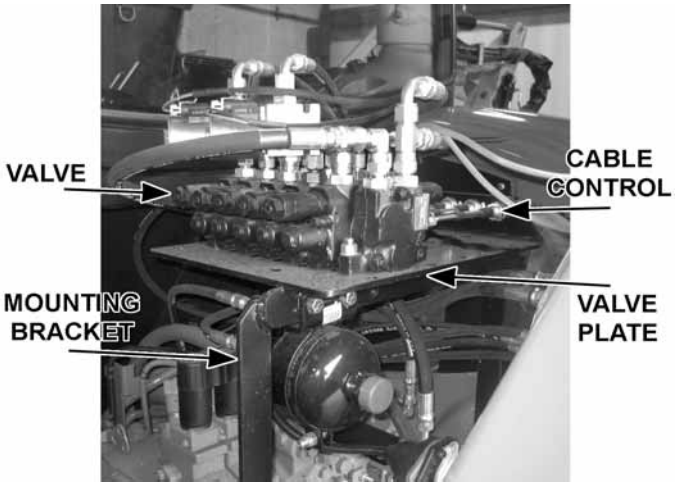

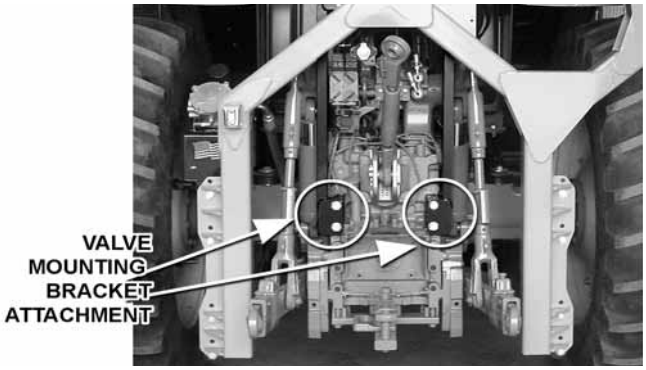

CABLE CONTROL LEVER STAND

On the corner cab post, mark a point at 1-3/8ò from the windshield and 22-1/2ò from the floor; then cut a 3/4ò diameter hole through the outer plastic shell. This will expose a threaded steel boss to attach the control box support bracket.

The rear corner of the cable control stand is placed approximately 6-1/4ò from the edge of the mat. The front edge of the stand is up against the corner cab post and the door sill lip of the mat. Before you mark or drill any holes, check for support plates or wires under the mat and the cab floor. NOTE: Cutting into plates or wires makes more work for everyone and could be dangerous. When you know where the wires/plates lie, mark one of the mounting holes. Drill a 3/8ò hole through the mat and through the floor of the cab. Next, lift the mat up and mark the other two holes on the cab floor. Drill the holes through the floor. Mark the mat and drill the other two 3/8ò holes.

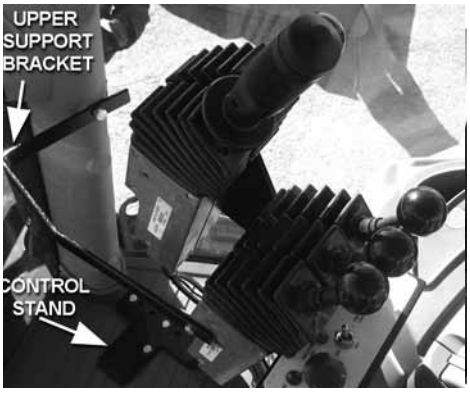

Use a 1ò hole saw and cut a 1ò hole through the mat over each 3/8ò hole. Secure the stand to the floor with the spacers, capscrews and nylock nuts provided.

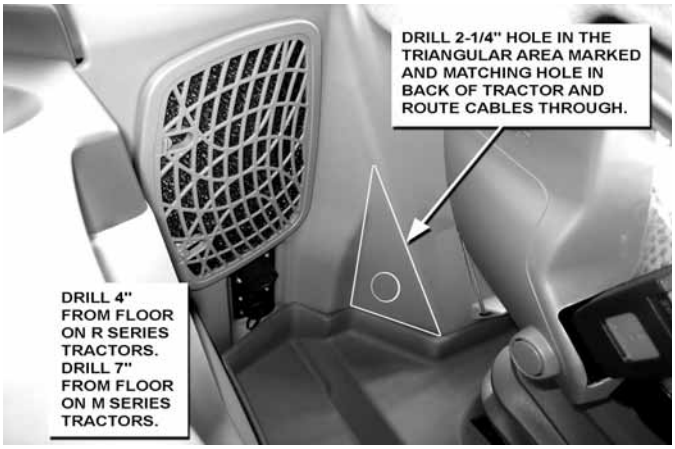

Secure cables and wires from the control stand with zip ties and route past the right side of the driverôs seat. Drill a 2 1/4ò diameter hole in the triangular area behind the driverôs seat. Drilll a hole to the outside rear of the tractor.

Wrap the cables with the 6ò split hose at the point they pass through the hole, and secure the zip-ties. Apply RTV sealer in and around individual cables and split hose, inside and outside of the cab for a water tight seal. Install upper support bracket from cab post to the control lever stand. *(ASM-JD CBL MNT-0002c)*

STAND PLACEMENT

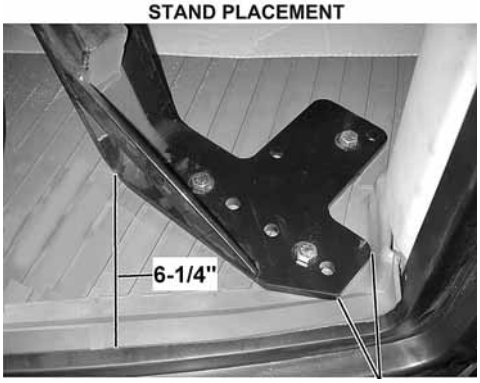

NOTE ON HUSCO CONTROL VALVES

Manual, cable controlled (Husco control valve) boom mowers require check valves with integral restricting orifice (#06502036) installed in the control valve work ports that are connected to the gland ends of the main and secondary boom cylinders. This check valve allows oil to free flow into the gland end of the main and secondary boom cylinders, but restricts flow out of the cylinder, thereby providing proper boom control. This check valve, #06502036 (Vendor #1968R-.063) is similar in appearance to hose adapter #33271 and Adapter #34396, with.06 orifice. These components can be identified as follows, and are to be installed per Parts Section for the lift valve. *(ASM-HUSCO-0001)*

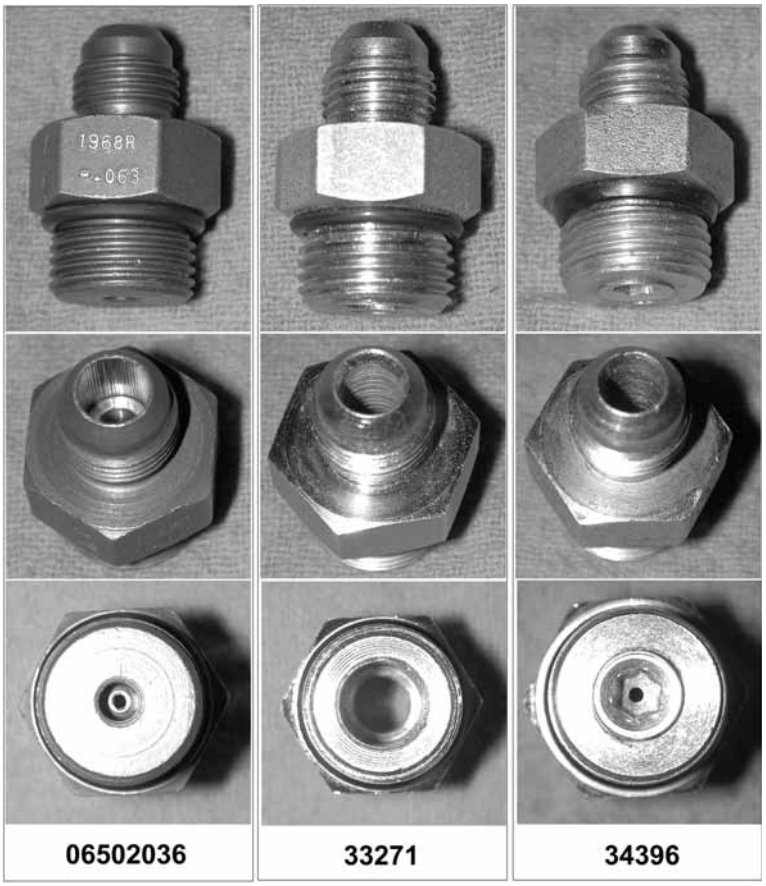

ELECTRONIC LIFT VALVE PORTS

(ASM-C-0089)

DANFOSS VALVE

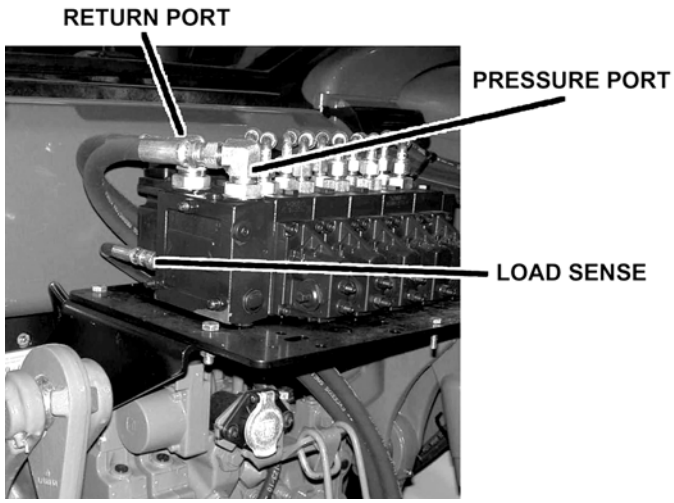

JOYSTICK SWITCHBOX MOUNTING

Locate the two holes in the right front corner of the cab frame. These will be the mounting holes for the two mounting bolts of the switchbox bracket. See picture below. Mount the bracket using the hardware supplied, as noted in the Parts Section. *(ASM-JD-0081)*

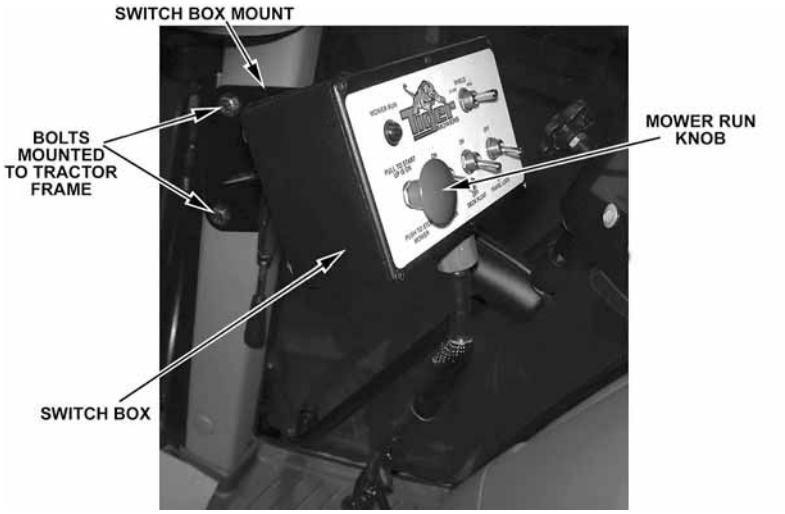

JOYSTICK CONTROL MOUNTING

Mounting the joystick control requires that the right armrest be modified and an additional bracket attached to accommodate the joystick. The armrest must be removed by sliding off the plastic cover and removing the capscrew from the lower right side of the seat. This will leave the armrest loose so it can be removed. Once the armrest is removed, place the joystick holder under the armrest, so the indentation on the outside of the armrest is lined up with the hole in the armrest bracket which the capscrew will need to pass through. Once they are lined up, mark the armrest where the hole passes through the armrest bracket. A 1/2ò hole must be drilled through the armrest so that the bracket can be secured. After the initial 1/2ò hole is drilled, on the inside of the armrest the hole must be cut to a larger diameter up to the metal plate in the armrest, so that a spacer and hex nut can be fastened to the capscrew which will secure the bracket. Install the armrest bracket on the armrest with the hardware shown in the Parts Section. Once the bracket is installed, re-attach the armrest to the seat using the existing hardware previously removed. Then install the joystick in the bracket with the machine screws shown in the Parts Section. Route the lift valve wires from the switchbox through the cab and out the back window. Cover with conduit and secure with ties or clamps as necessary. *(ASM-JD-0082)*

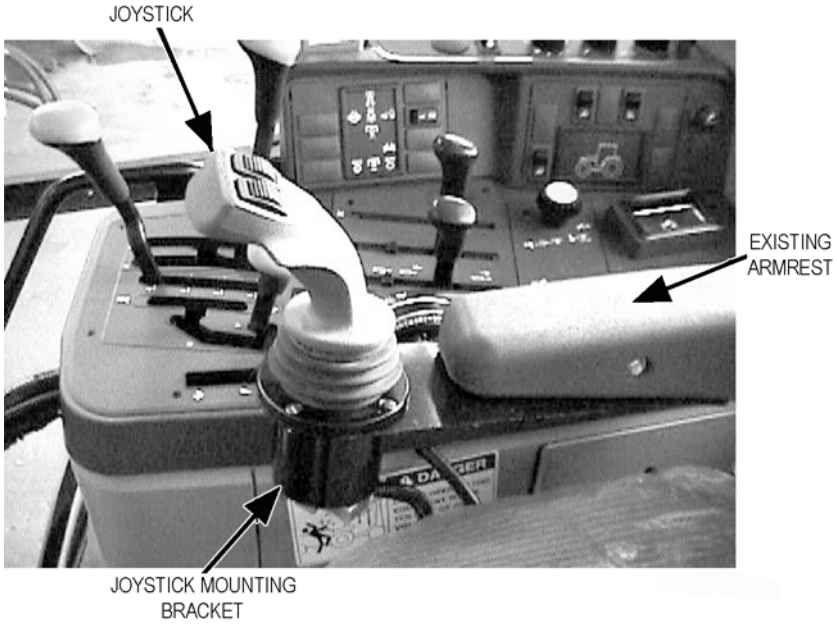

BOOM JOYSTICK CONTROL CALIBRATION

SUB-D

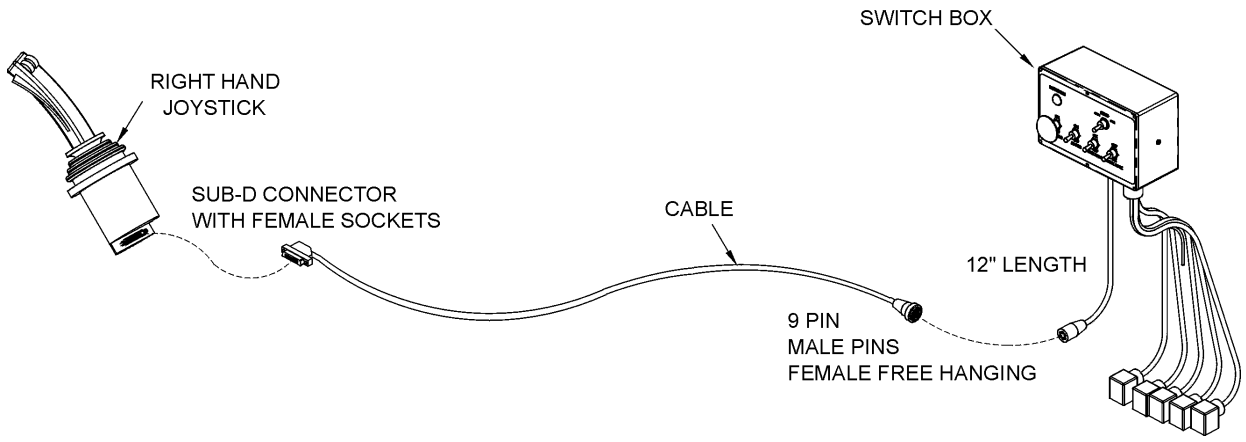

This Electronic control valve is now equipped with higher-resolution actuators on Main Boom, Secondary Boom, Deck Roll, and Swivel functions. These actuators have active fault monitoring. The Deck Shield section does not have active fault monitoring. The joystick is unchanged and provides a ratio-metric voltage signal. The neutral signal voltage is half or 50% of tractor supply voltage. A 25% signal voltage will shift the valve spool to full A-Port, and 75% signal voltage will shift the spool to full B-Port in the Main, Secondary, and Swivel valve sections. On the Deck Roll function a 34% signal voltage will shift the valve spool to full A-Port and a 68% signal voltage will shift the spool to full B-port. If an actuator with active fault monitoring receives a signal from the joystick that is less than 15% or greater than 85% of supply voltage the actuator will ñfault outò and shut down. Also, if there is an internal failure in the actuator or if the spool position is greater than that specified by the signal voltage from the joystick, the actuator will ñfault outòand shut down. An ñactive faultò condition causes the actuator to drive the spool to neutral, shut down, and activate a red LED on the top of the actuator. The active fault can be canceled by simply cycling the Master Switch OFF and then ON, which resets the fault monitoring, and causes the LED on top of the actuator to be green again.

⚠ CAUTION The joystick control is equipped with signal adaption potentiometers.

These provide the capability to individually adjust the oil flow to each boom function. It is important that the boom functions do not travel too fast. Excessive boom speed can reduce the stability of the unit and decrease operator control.

Note: Use a Phillips screwdriver and be sure to adjust the screws carefully! DO NOT turn the potentiometers beyond their stopping point, potentiometers are very delicate! Turning the ñAò or ñBòport potentiometers clockwise increases the oil flow to increase the boom function speed, and turning them counterclockwise decreases the oil flow to decrease the boom function speed. See the graphic on the next few pages for help in adjusting.

BOOM JOYSTICK CONTROL CALIBRATION (CONTINUED)

Run tractor at normal operating RPM to adjust the settings as follows.

Set the dead band compensation potentiometer first.

Set the dead band compensation potentiometer at 50%, or halfway between full clockwise and full counterclockwise.

Setting Signal Adaptation Potentiometers:

Disconnect the Deutsch connectors from the actuators of the valve. Use a Volt/Ohm meter to measure signal voltage and adjust the signal adaptation potentiometers as needed. Pin #4 is tractor supply voltage. Pin #1 is signal voltage from the joystick, and pin #3 is ground. First, measure supply voltage between pins 4 and 3. Then measure signal voltage between pins 1 and 3 while indexing the joystick function fully in both the ñAò and ñBò port direction. Divide the signal voltage by the supply voltage to get signal voltage as a % of supply voltage. This percentage should not be less than 25% or greater than 75% for the Main Boom, Secondary Boom, or Swivel function. This percentage should not be less than 30% or greater than 62% for the Deck Roll function. Note these initial settings for the Deck Roll function should prevent the spool from shifting into float. *After making this first adjustment to deck roll if the spool still goes into float, adjust the "B" port screw additionally counterclockwise.*

Reconnect Deutsch connectors on control cables to actuators on Electronic valve. Run tractor until hydraulic system is at operating temperature. Now refine the adjustments of the signal adaptation potentiometers for both ñAò and ñBò ports for all proportional functions to achieve the following function times. Note: turning potentiometer clockwise increases the flow or the function speed, and turning them counterclockwise decreases the flow or the function speed. Note, if during this procedure the trim potentiometer is set to full counterclockwise but the function is still too fast, use the mechanical stops at the manual actuator end of the valve section to further limit flow. Turn limit screw in or clockwise to limit flow. The upper limit screw limits flow to B-port, and the lower limit screw limits flow to A-port. However DO NOT adjust the limit screw on B-port of deck roll function. Limiting B-port will prevent float function.

BOOM JOYSTICK CONTROL CALIBRATION (CONTINUED)

MAIN BOOM: ñAò Port, Boom Up: 8-10 Seconds
(Note: Extend secondary boom completely; roll deck to be level with ground, and lower main boom until deck is on ground. Now index main boom "up" function and determine the time required for main boom to rise completely.)

ñBò Port, Boom Down: 6-8 Seconds
(Note: Extend secondary boom completely, roll deck to be level with ground, and raise the main boom to "full up". Then index the main boom "down" function to determine the amount of time required for the deck to contact the ground. CAUTION: Stop the boom just as the deck contacts the ground.)

SECONDARY BOOM: ñAò Port, Boom Out: 8-10 Seconds
(Position main boom full up, roll deck out until deck cylinder is fully retracted, and bring secondary boom in completely. Then index the secondary boom "out" function and determine the time required for boom to extend out completely.)

ñBò Port, Boom In: 8-10 Seconds
(Position the main boom full up, roll deck out until deck cylinder is fully retracted, and extend secondary boom completely. Then index the secondary boom "in" function and determine the time required for boom to come in.)

DECK ROLL: ñAò Port, Deck Out: 7-9 Seconds
(Raise main boom to vertical, extend secondary boom out slightly so that deck can be articulated without contacting the main boom, and roll deck in until deck cylinder is completely extended. Then index the deck roll "out" function and determine the time required for the deck to roll out.)

ñBò Port, Deck In: Target 7-9 Seconds (but DO NOT use Limit Screw)
(Raise main boom to vertical, extend secondary boom out slightly so that deck can be articulated without contacting the main boom, and roll deck out until deck cylinder is completely retracted. Then index the deck roll "in" function and determine the time required for the deck to roll in.)

BOOM SWIVEL: ñAò Port, Boom Aft: 14-16 Seconds for 3PS, 3OS, SS
(Extend booms completely; rotate head to be level with ground, lower main boom until deck is just above ground, and swivel boom full forward. Then index the boom swivel "aft" function and determine the time required for the boom to swivel full aft. Use caution when doing this, stop boom before main boom contacts tire.)

ñBò Port, Boom Forward: 14-16 Seconds for 3PS, 3OS, SS
(Extend booms completely, rotate head to be level with ground, lower main boom until deck is just above ground, and swivel boom aft until near tire. Then index the boom swivel "forward" function and determine the time required for the boom to swivel full forward.)
(ASM-C-0082)

BOOM JOYSTICK DIAGRAM *(ASM-C-0082A)*

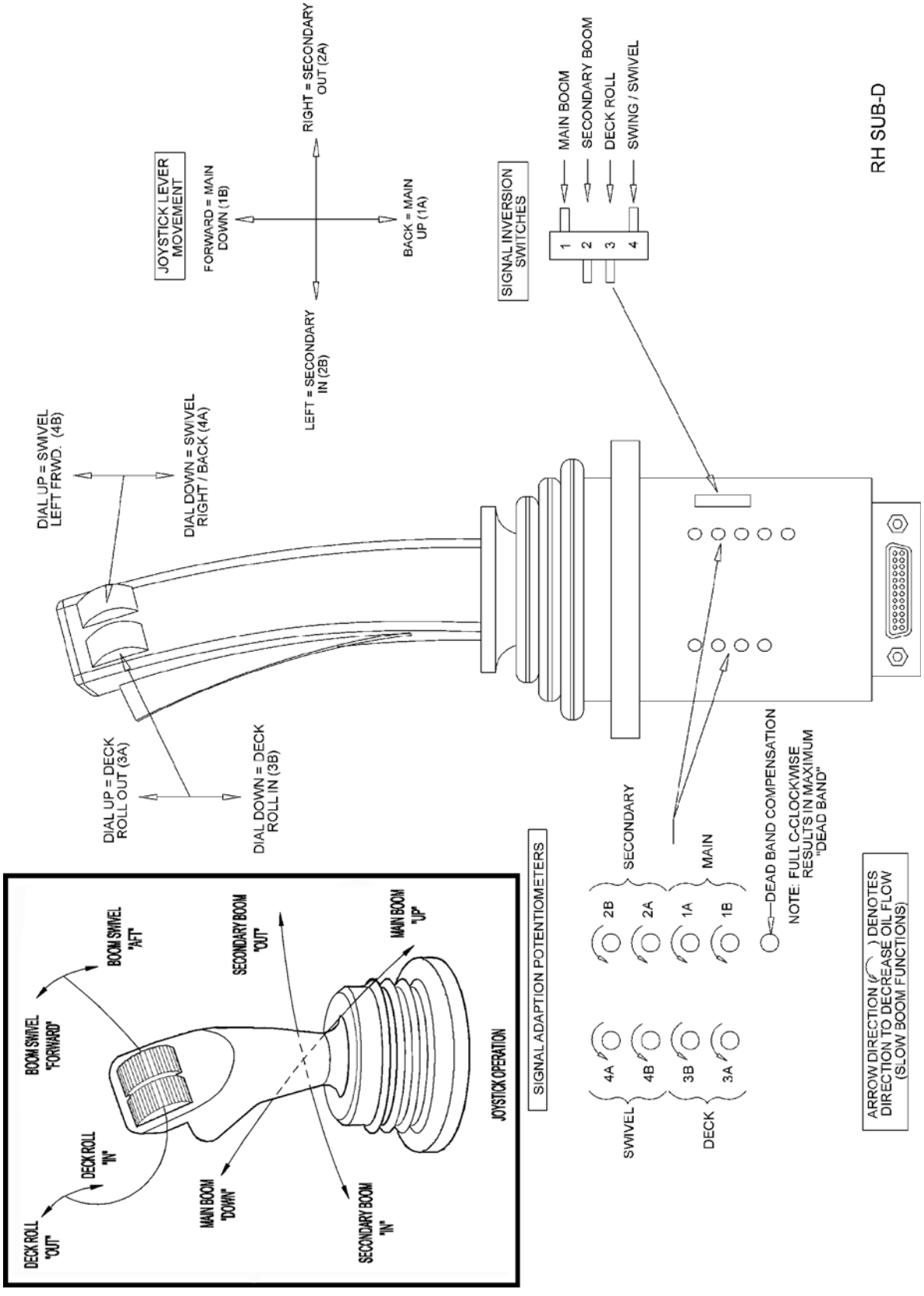

REAR STOW BENGAL HOSE ROUTING

WARNING NOTE: The sudden release of hydraulic pressure could cause the sudden movement of very heavy parts. Anyone in the way of these parts could be severely hurt or killed. DO NOT ALLOW these hydraulic hoses to BREAK or BURST. To prevent hydraulic failure make sure the hoses do not pinch or stretch as boom moves. Measure TWICE, check TWICE then proceed with caution.

Route the hoses through the space between the swivel and the mainframe. Connect the hoses to the brake valve. Assemble the swivel clamp and place the return hose for the motor in the middle and the pressure line on the bottom. Place the 1/4ò hoses in the top clamp and wrap the hoses with a split hose before tightening the clamp. If not all of the 1/4ò hoses fit, route two of the hoses above the clamp and secure them to the other hoses with a zip tie. Make sure there is enough slack for all hoses to pivot at the joint where the main boom arm bends in the swivel, and tighten the hoses in the clamp. Wrap the hoses on either side of the clamp with the hose wrap. This will protect the hoses from abrasion and heat. *(ASM-T4 HOSE ROUTING-0001)*

(ASM-C-0023)

BOOM HYDRAULIC DIAGRAM

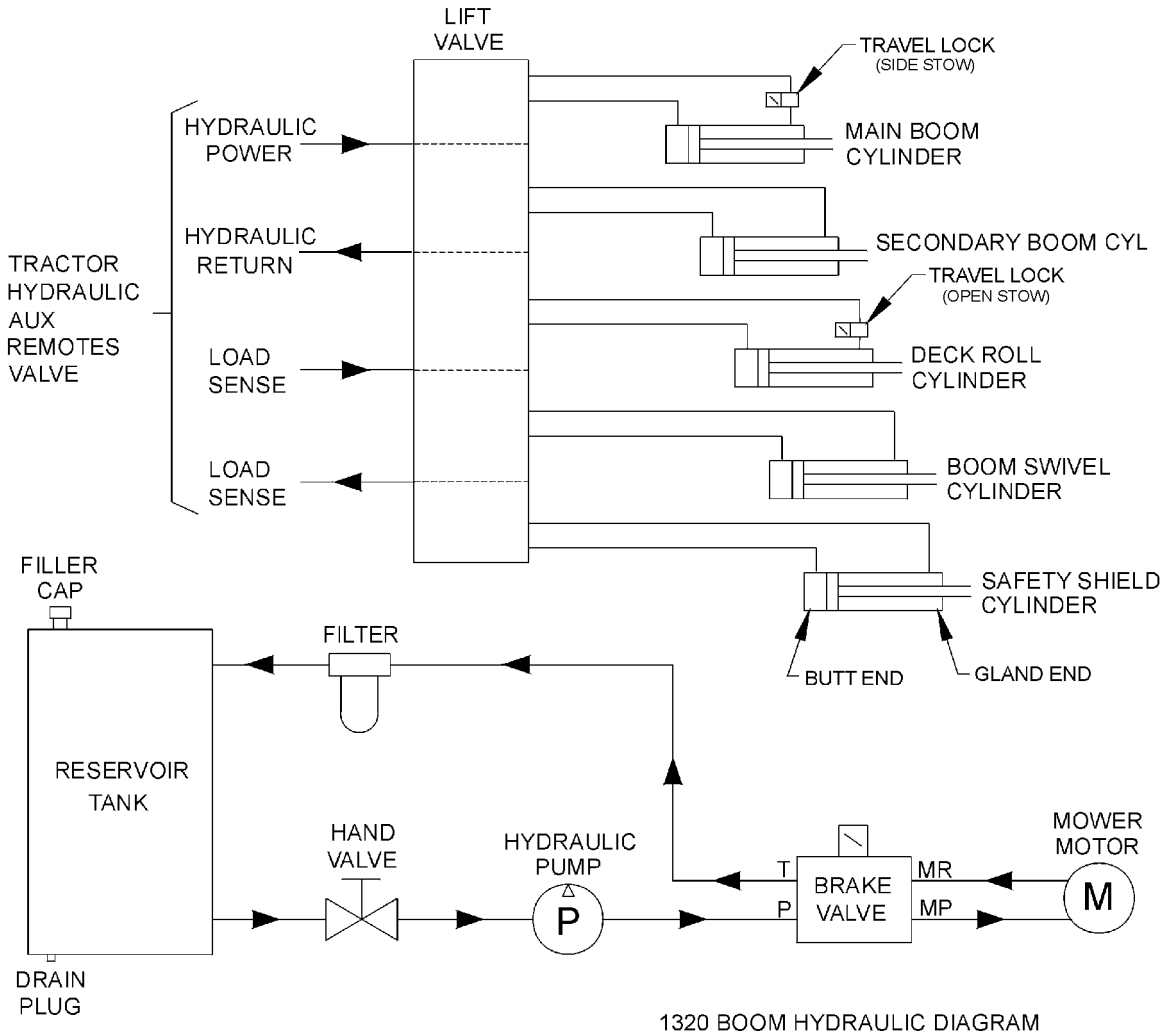

1320 BOOM HYDRAULIC DIAGRAM

WHEEL WELL HYDRAULIC TANK INSTALLATION

Install all fittings and tubes into tank and tank filter as shown in the Parts Section illustration. Insert tank sight glass onto the tractor side of the tank.

Place the tank in the mounting bracket on the axle brace as shown in the Parts Section. Secure the tank with the hardware provided.

Install the filter gauge into the filter housing so that it points to the rear of the tractor and is clearly visible to the operator. The tank breather cap is ready for use as the tank is filled. Some of these items may already be installed. *(ASM-C-0103)*

WHEEL SPACERS

When mounting a boom mower, a spacer kit is needed for both rear wheels (part # 06200637). After removing the wheels attach the spacer to the wheel portion of the axle with the hardware provided. When you are ready to re-attach the wheel, the wheel goes on first then the reinforcement ring and finally the hardware provided. *(ASM-JD-0099)*

FILLING HYDRAULIC RESERVOIR

Refer to the Maintenance Section for filling specifications and hydraulic oil requirements.

NOTE: Starting or running your Tiger mower before filling reservoir will cause serious damage to the hydraulic pump.

(ASM-C-0004hydro resrv)

INSTALLING O-RING FITTINGS

Installing straight, 45Üand 90ÜO-rings requires that the O-ring and washer be up against the swivel body. Insert the swivel and turn in until the swivel is pointed in the desired direction and O-ring contact is made. Hold swivel in set direction with a wrench and turn the O-ring nut away from the swivel body and carefully tighten. *(ASM-C-0056)*

INSTALLING NATIONAL PIPE FITTINGS

Whenever installing a pipe fitting, wrap the threads clockwise (looking at the end) with teflon tape. In this way, the tape will be tightened when installed. NOTE: It is not necessary to tape O-ring fittings, or those installed in swivels. *(ASM-C-0088)*

PREFORMED TUBE INSTALLATION

Lay booms on floor so that the side with the clamp plates is up. Locate all tube clamps and install them loosely onto the clamp plates.

Arrange the tubes and hoses as outlined in the Common Parts Section. Install the tubes closest to the boom arm first, being careful not to pinch the tubes. Place the other tubes outside of the first tubes. Snug all clamp bolts, but do not tighten. Check all tubes for correct alignment and that none are pinched or bent. The clamp bolts can now be tightened. *(ASM-C-0085)*

GENERAL HOSE INSTALLATION

Refer to the Parts Section for detailed information about hoses and fittings for this application. *(ASM-C-0011)*

HOSE COVERING

Secure hoses together with zip ties wherever loose. Wrap the hoses between the swivel and main boom with the hose cover provided. Wrap the hoses between the main boom and secondary boom with the hose cover provided. Where hoses may contact the frame or other edges, wrap with split hose and secure with hose clamps or zip ties.

On non-cab units, the pressure and return hoses from the control valve will also need to be routed inside the protective hose wrap. Cover the valve and valve fittings with the hose cover and secure with the string provided. *(ASM-C-0058)*

ACCUMULATOR INSTALLATION

Install the accumulator bracket on the right mainframe mast or lift valve mount, if applicable, with the capscrews, lockwashers and spacers, if applicable, as shown in the Parts Section. Install the accumulator in the bracket and secure with the hardware shown. Install fittings and hoses to the cylinder and control valve as shown in the Parts Section. **Use teflon tape on all pipe fittings (except O-rings).** *(ASM-C-0012)*

SOLENOID BRAKE VALVE

Install a solenoid valve on the mounting bracket with the supplied hardware as shown in the Parts Section in this manual. While installing the fittings to the brake valve, the electrical coil on the spool may have to be removed to make room. When reinstalling the coil, it is important to use no more than 5 ft. lbs. (or 60in. lbs.) torque. **WARNING: OVER TORQUE TO THE COIL WILL RESULT IN HYDRAULIC FAILURE OF SPOOL.** *(ASM-C-0025)*

TEMPERATURE GAUGE MOUNTING (OPTIONAL)

Mount the temperature gauge where it is clearly visible to the operator. Attach the green (-) wire from the negative post on the gauge to a grounded bolt on the tractor frame. Remove paint if needed to make a good ground. Remove the pipe plug from the side of the hydraulic reservoir and install the temperature sensor using thread sealing tape. Run the white wire from the (s) sensor post of the gauge to the temperature sensor on the hydraulic reservoir tank. *(ASM-C-0051)*

WHEEL WEIGHT MOUNTING

For all tractors using a boom mower, a wheel weight will be required for the rear left side wheel. It will be necessary to mount the weight in the wheel using the long capscrews, lockwashers, flatwashers, spacers (if applicable), and hex nuts per the diagram in the Parts Section.

Installation is most easily done with a fork lift, inserting a fork in the center slot of the wheel weight. The head of the capscrews is to be toward the OUTSIDE of the weight, with flatwashers on both the inside and outside of the assembly.

The left rear tire may also be filled with a mixture of water and calcium chloride at about five pounds per gallon. Tire air pressure should be maintained according to the Maintenance Section. *(ASM-C-0055)*

OS AXLE BRACE MOUNTING

The open stow axle braces are to be mounted under the rear axle of the tractor. The other end of the axle brace mounts on the outside of the lower rear corners of the mainframe. After attaching the boomrest, it should fit tightly and level under the tractor. Attach the axle brace(s) to the mainframe with hardware shown in the Parts Section and tighten. Attach the axle braces to the rear axle using the mounting hardware shown in the Parts Section, but DO NOT tighten.

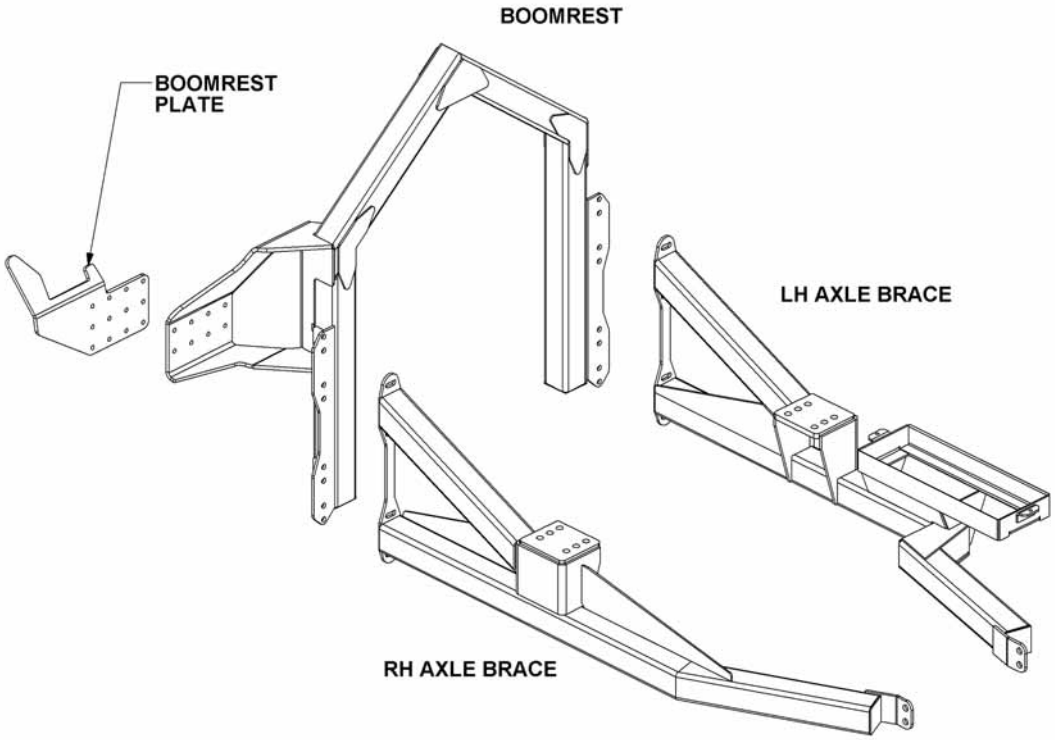

OS BOOMREST MOUNTING

Carefully raise the open stow boomrest and align the holes with those of the axle brace. Now install all attaching hardware, as shown in the Parts Section, loosely, to allow for the alignment with the left and right axle brace. Tighten / torque all hardware on the brace and the boomrest. Finally, add the boomrest plate to the boomrest as shown in the Parts Section. *(ASM-JD-0246)*

DECK ATTACHMENT

The pivot assembly is used to attach the head to the secondary boom. Install the deck pivot cylinder using the pins and hardware, which is illustrated in the Common Section.

Connect the fittings and hoses from the pivot cylinder to the small preformed tubes on the boom arm. Connect the fittings and hoses from the motor to the large preformed tubes on the boom arm. Connect all remaining hoses from the control valve to the cylinders and / or preformed tubes on the boom arm. Refer to Common Section for diagrams. *(ASM-C-0018)*

3-POINT SPACER BLOCKS

To help stabilize the 3-point arms on your tractor for Open Stow, Legal Rear Stow or Triple flail applications, 3-Point Spacers (P/N 06402260) need to be installed. To attach the spacer blocks on JD6140-50R tractors, 5/8ò capscrews (P/N 21784) and 5/8ò flatwashers (P/N 33764) will be used. *(ASM-C-0036 jd6140r)*

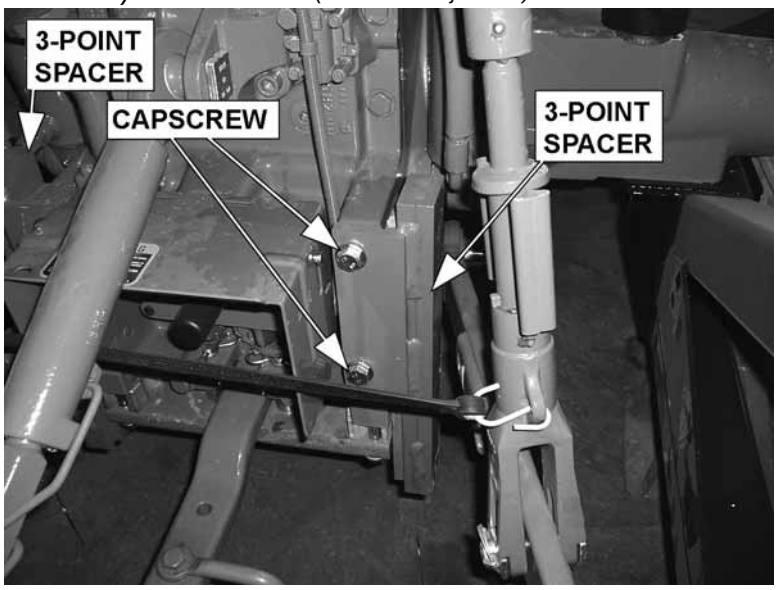

3-POINT BOOMREST MOUNTING

Install the boomrest onto the 3-point hitch using the pins as shown in the Parts Section. Adjust the bottom arms so the boom clears the tractor fender (X); adjust the top link so that the boom saddle is approximately level with the ground. Re-adjust once the boom is completely installed and operable. Adjust the top link until the boom is properly seated in the boomrest (Z) and no part of the boom (including hoses) comes into contact with the tractor cab. Using the side turnbuckles, adjust the boom and boomrest all the way to the right for proper width restrictions. Check your local width regulations before transporting your mower. You may need to adjust the boomrest for overall height as well (Y).

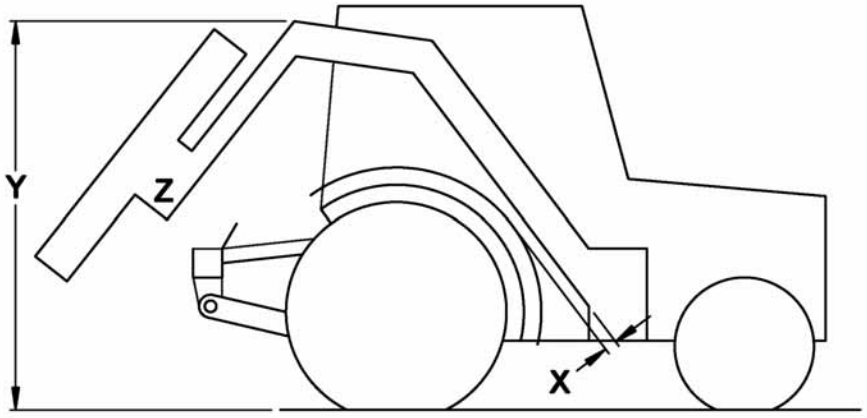

(ASM-C-0054)

SINGLE COLUMN BOOMREST MOUNTING

Carefully lower the boomrest and align the holes with those of the axle brace. Now install all attaching hardware, as shown in the Parts Section, loosely, to allow for the alignment with the axle brace. Tighten / torque all hardware on the axle brace and the boomrest. Finally, add the Boomrest Plate with the hardware provided so it lines up with the boom in the rear stowing position. *(ASM-JD-0053)*

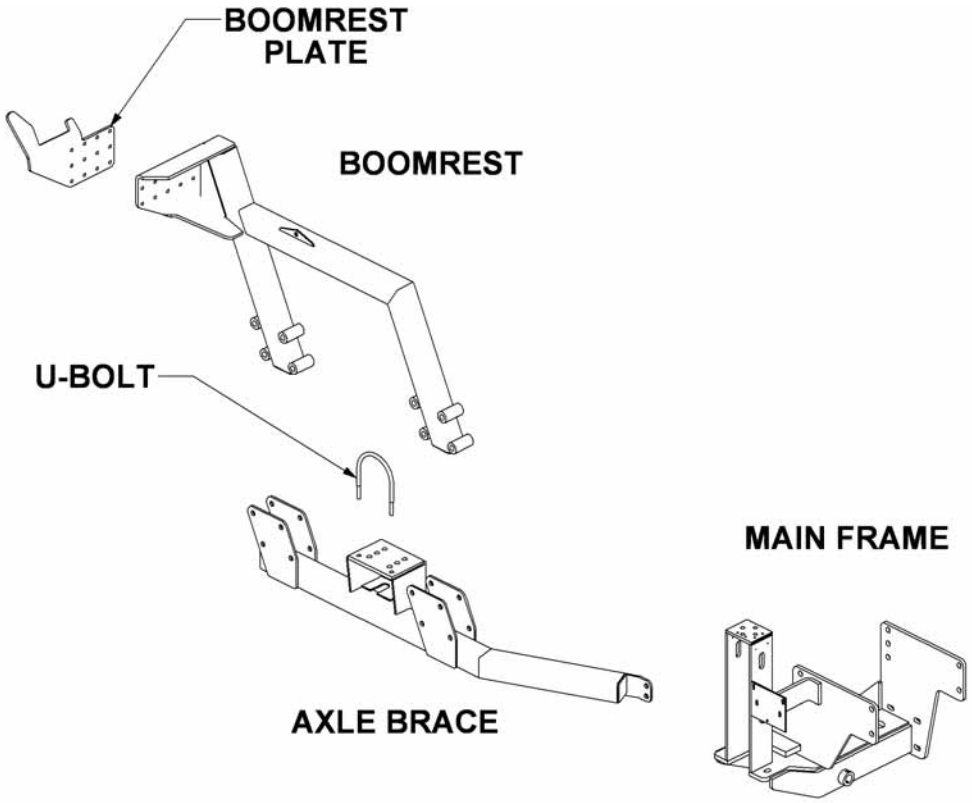

MAIN BOOM INSTALLATION

Using a hoist, install the boom swivel into the mainframe as shown in the Parts Section. Line up holes in swivel and mainframe for large swivel pin and insert pin. Secure with hardware as shown.

Attach the inner end of the main boom to the swivel bracket with the cylinder anchors positioned upward, and at a right angle to the tractor. Secure it with the horizontal hinge pin. Secure the hinge pin in the boss with capscrews, etc. (see Parts Section).

Attach the butt end of the main boom cylinder to the swivel with the cylinder pin and roll pins shown in the Parts Section.

Install the travel lock on the rod end of the main boom cylinder. This should be facing the butt end of the cylinder after installation.

Install the fittings and hoses to the main boom cylinder per Parts Section.

GREASE HINGE PIN ZERKS ON BOOM AFTER ASSEMBLY, ONCE UNDER LOAD WITH BOOM ELEVATED, AND AGAIN AT REST WITH BOOM SUPPORTED. *(ASM-C-0013)*

FINAL PREPARATION FOR OPERATION

Place operatorûs safety and operation decals on the steering column and side console where they are clearly visible to the operator. These decals should be understood by each operator of the machine in conjunction with the Safety and Operation Sections of this book. The decals are to be maintained in good condition as a reminder to the operator, and should be replaced if damaged.

All bosses, pins and pivot points will need to be greased as instructed in the Maintenance Section of this manual. The hydraulic reservoir can also be filled with the recommended fluid (see Maintenance Section) and the filter installed in the top of the tank. Double check all fittings and fasteners BEFORE starting tractor. Also secure any loose hoses together with zip ties and wrap with split hoses where friction may occur on the hoses.

⚠WARNING BEFORE starting or operating the tractor you must read and understand the Safety and Operation Sections of this manual completely.

BE SURE THE BALL VALVES ARE OPEN! Start tractor and allow instruments to stabilize. Using a piece of paper or cardboard as noted in the Safety and Maintenance Sections, check all fittings and connections for hydraulic leaks.

If a leak is found, you must shut down the tractor and set the cutter on the ground. Before attempting to fix the leak, you must actuate the lift valve handles several times to relieve any pressure in the lines.

Before operating the mower, the cutter head and boom should be slowly moved throughout the full range of motion. Watch for any condition that would cause pinching or excess stress on the hoses. The steering and front axle travel should also be carefully moved through their full range of motion. If any condition occurs in which the hoses contact the tires, the steering and / or front axle travel may need to be limited as described in the tractor operatorûs manual. This should also be done if the tires rub, or are extremely close to any other part of the mower, such as the hydraulic tank or draft beam. This may include adding shims or adjusting stop bolts in the tractor front to solve the problem. While checking motion, you should also check that the control circuits are connected according to the operatorûs decal for the valve handles.

MOWER TESTING

Take the tractor to a place free of loose objects on the ground. Operate the cylinders through their full range of motion again, to clear the lines of air. Follow the instructions in the Operation Section to operate the mower. Vibration of the mower should be minimal at all times. After a 5 minute test run, the knife bolts should be retorqued, and retorqued once again after the first few hours of operation.

If any parts of this Assembly Section, or any other section of this manual are not clearly understood you must contact your dealer or the address on the front of this manual for assistance! *(ASM-C-0010)*

OPERATION SECTION

©2013 Alamo Group Inc.

OPERATION

TIGER BOOM MOWER
OPERATING INSTRUCTIONS

Tiger Booms are manufactured with quality material by skilled workers. The Boom is designed to attach to a tractor and operate various heads for a wide range of vegetative maintenance applications. The boom and heads are equipped with safety warning decals, protective deflectors, shields, and other safety features to provide operator and passerby protection, however, no shielding is 100% accurate. ALL safety equipment and safety warning decals must be maintained on the unit in good operational condition at all times.

It is the operator's responsibility to be knowledgeable of all potential operating hazards and to take every reasonable precaution to ensure oneself, others, animals, and property are not injured or damaged by the boom unit, tractor or a thrown object. Do not operate the boom and attached head if bystanders, passersby, pets or livestock are within 300 feet of the unit.

This section of the Operator's Manual is designed to familiarize, instruct, and educate operators to the safe and proper use of the boom and attached head. Pictures contained in this section are intended to be used as a visual aid to assist in explaining the operation of a Boom and are not specific to a Boom. Some pictures may show shields removed to enhance visual clarity. NEVER operate the boom unit without all safety equipment in place and in good operational condition. The operator must be familiar with the boom unit and tractor operation and all safety practices before beginning operation. Proper operation, as detailed in this manual, will help ensure years of safe and satisfactory use of the Boom

READ AND UNDERSTAND THE ENTIRE OPERATING INSTRUCTIONS AND SAFETY SECTION OF THIS MANUAL AND THE TRACTOR MANUAL BEFORE ATTEMPTING TO USE THE TRACTOR AND IMPLEMENT. If you do not understand any of the instructions, contact your nearest authorized dealer for a full explanation. Pay close attention to all safety signs and safety messages contained in this manual and those affixed to the implement and tractor. *(OPS-U- 0001)*

READ, UNDERSTAND, and FOLLOW the following Safety Messages. Serious injury or death may occur unless care is taken to follow the warnings and instructions stated in the Safety Messages. Always use good common sense to avoid hazards. (SG-2)

PELIGRO Si no lee ingles, pida ayuda a alguien que si lo lea para que le traduzca las medidas de seguridad. (SG-3)

©2013 Alamo Group Inc.

1.OPERATOR REQUIREMENTS

Safe operation of the unit is the responsibility of a qualified operator. A qualified operator has read and understands the implement and tractor Operatorôs Manuals and is experienced in implement and tractor operation and all associated safety practices. In addition to the safety messages contained in this manual, safety signs are affixed to the implement and tractor. If any part of the operation and safe use of this equipment is not completely understood, consult an authorized dealer for a complete explanation.

If the operator cannot read the manuals for themselves or does not completely understand the operation of the equipment, it is the responsibility of the supervisor to read and explain the manuals, safety practices, and operating instructions to the operator.

Safe operation of equipment requires that the operator wear approved Personal Protective Equipment (PPE) for the job conditions when attaching, operating, servicing, and repairing the equipment. PPE is designed to provide operator protection and includes the following safety wear:

PERSONAL PROTECTIVE EQUIPMENT (PPE)

- Always Wear Safety Glasses
- Hard Hat
- Steel Toe Safety Footwear
- Gloves
- Hearing Protection
- Close Fitting Clothing
- Respirator or Filter Mask (depends on operating conditions) *(OPS-U- 0002)*

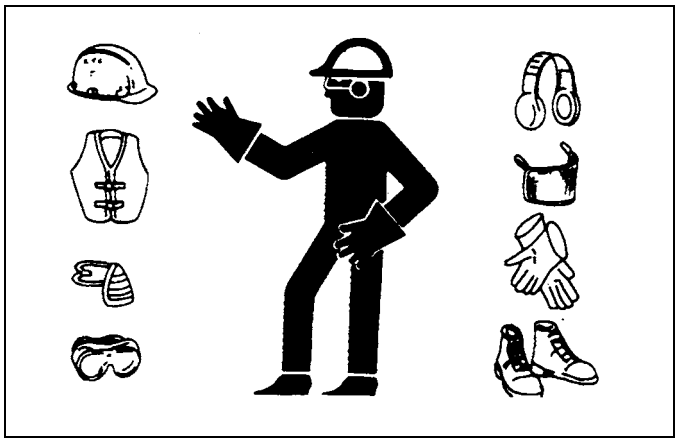

⚠ DANGER

NEVER use drugs or alcohol immediately before or while operating the Tractor and Implement. Drugs and alcohol will affect an operator ôs alertness and coordination and therefore affect the operator ôs ability to operate the equipment safely. Before operating the Tractor or Implement, an operator on prescription or over-the-counter medication must consult a medical professional regarding any side effects of the medication that would hinder their ability to operate the Equipment safely. NEVER knowingly allow anyone to operate this equipment when their alertness or coordination is impaired. Serious injury or death to the operator or others could result if the operator is under the influence of drugs or alcohol. (SG-27)

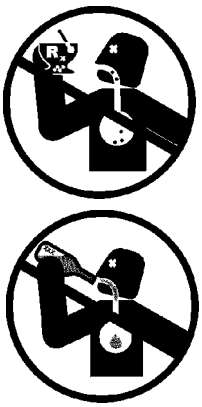

©2013 Alamo Group Inc.

OPERATION

2.TRACTOR REQUIREMENTS

In addition to tractor horsepower and size required to operate the boom unit, the tractor must also be properly equipped to provide operator protection, to alert approaching vehicle drivers of the tractorís presence, and to ensure tractor stability when mowing with the boom fully extended.

Tractor Requirements and Capabilities

- ASAE approved Roll-Over Protective Structure (ROPS) or ROPS cab and seat belt.
- Operator Protection ..... Tractor must be equipped with protective structure such as operatorcage or lexan window to protect operator from thrown object and falling objects
- Tractor Safety Devices ..... Slow Moving Vehicle (SMV) emblem, lighting,
- Tractor Ballast ..... As required to maintain at least 1500 lbs. on left rear tire

2.1 ROPS and Seat Belt

The tractor must be equipped with a Roll-Over-Protective-Structure (ROPS) (tractor cab or roll-bar) and seat belt to protect the operator from falling off the tractor, especially during a roll over where the driver could be crushed and killed. Only operate the tractor with the ROPS in the raised position and seat belt fastened. Tractor models not equipped with a ROPS and seat belt should have these life saving features installed by an authorized dealer. *OPS-U- 0003*

WARNING Operate this Equipment only with a Tractor equipped with an approved roll-over-protective system (ROPS). Always wear seat belts. Serious injury or even death could result from falling off the tractor--particularly during a turnover when the operator could be pinned under the ROPS. (SG-7)

2.2 Operator Thrown Object Protection

The tractor must be equipped with protective equipment to shield the operator from falling and thrown objects. For cab tractors, the tractor must be equipped with an operator safety screen on its right side or the right side windows must be fitted with a shatter resistant safety window. For non-cab tractors, the tractor must be equipped with a ROPS and operator protective safety cage that provides protection to the right and above the operator seat. DO NOT remove the ROPS from non-cab tractors to equip a safety cage.

OPS-B- 0001

©2013 Alamo Group Inc.

DANGER Never operate the Tractor and Mower Unit without an OPS (Operators Protective Structure) or Cab to prevent injury from objects thrown from ground or from overhead trimming. Stop mowing if workers or passersby are within 300 feet. (SBM-9)

2.3 Tractor Lighting and SMV Emblem

If the tractor will be operated near or traveled on a public roadway it must be equipped with proper warning lighting and a Slow Moving Vehicle (SMV) emblem which are clearly visible from the rear of the unit. Most tractorís have different settings for operating and transporting lighting. Refer to the tractor operatorís manual for using the tractorís light switch and operating the turn signals.

OPS-B- 0017

©2013 Alamo Group Inc.

2.4 Tractor Ballast

To ensure tractor s tability when operating on flat surfac es the left rear tractor tire MUS T exert a minimum down force (weight) of 1500 lbs. on the ground when the tractor is on level ground, its boom is fully extended and the mower head is horizontal and two feet above the ground. For units which have the ability to operate on either side of the tractor, these requirements must also be met for the right side tire when the boom is extended to the left side as described above. A tractor that does not meet this criteria is DANGEROUS and should not be operated as upset of the unit can occur resulting in possible serious injury and property damage. NOTE: All factory mounted units are tested and meet the ballast requirement before shipment; further testing is not required unless the unit is operated in a manner other than what is considered standard operating conditions.

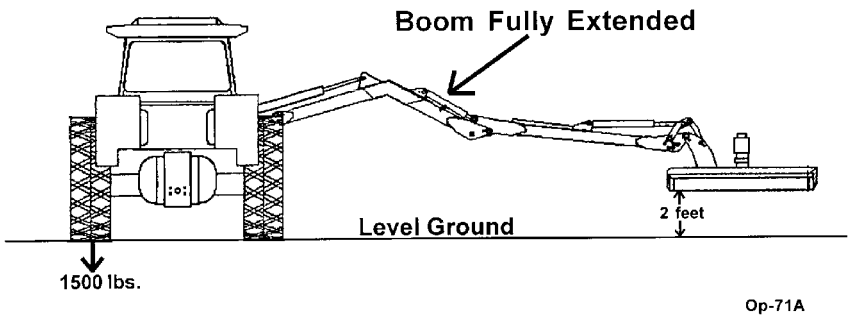

If the unit is op erated on slopes greater than 5°, additional counterweight will be required. Operation of th e unit on slopes greater than 11 percent (6.4 degrees) is not recommended under any circumstances. On a tractor with a 96ò outside to outside tire spread, an 11 percent (6.4 degrees) slope occurs when one rear tractor tire is about 8ò lower than the other rear tire. *OPS-B- 0018*

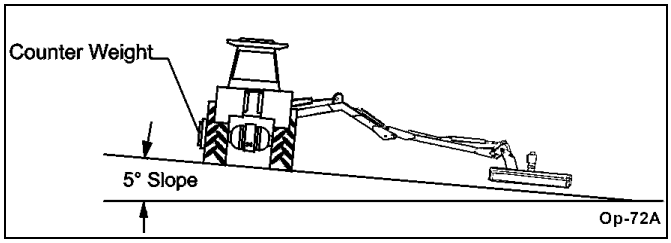

3.GETTING ON AND OFF THE TRACTOR

Before getting onto the tractor, the operator must read and completely understand the implement and tractor operator manuals. If any part of either manual is not completely understood, consult an authorized dealer for a complete explanation. *OPS-U- 0007*

⚠WARNING Do not mount or dismount the Tractor while the tractor is moving. Mount the Tractor only when the Tractor and all moving parts are completely stopped. (SG-12)

©2013 Alamo Group Inc.

3.1 Boarding the Tractor

Use both hands and equipped handrails and steps for support when boarding the tractor. Never use control levers for support when mounting the tractor. Seat yourself in the operator's seat and secure the seat belt around you.

Never allow passengers to ride on the tractor or attached equipment. Riders can easily fall off and be seriously injured or killed from falling off and being ran over. It is the operator's responsibility to forbid all extra riders at all times. *OPS-U- 0008*

⚠ DANGER Never allow children to operate, ride on, or come close to the Tractor or Implement. Usually, 16-17 year-old children who are mature and responsible can operate the implement with adult supervision, if they have read and understand the Operator's Manuals, been trained in proper operation of the tractor and Implement, and are physically large enough to reach and operate the controls easily. (SG-11)

⚠ DANGER Never allow children or other persons to ride on the Tractor or Implement. Falling off can result in serious injury or death. (SG-10)

⚠ WARNING Do not mount or dismount the Tractor while the tractor is moving. Mount the Tractor only when the Tractor and all moving parts are completely stopped. (SG-12)

3.2 Dismounting the Tractor

Before dismounting the tractor, idle the tractor engine down, disengage the head and retract the boom arm to the transport position. Park the tractor on a level surface, place the transmission in neutral and set the parking brake. Shut down the tractor engine, remove the key, and wait for all motion to come to a complete stop before exiting the operator's seat. NEVER leave the seat until the tractor, its engine, and mower head movement have come to a complete stop.

Use hand rails and extra steps when exiting the tractor. Be careful of your step and use extra caution when mud, ice, snow, and other matter has accumulated on the steps and handrails. Never rush or jump off the tractor. *OPS-B- 0002*

⚠ DANGER BEFORE leaving the tractor seat, always set the parking brake and/or set the tractor transmission in parking gear, disengage the PTO, stop the engine, remove the key, and wait for all moving parts to stop. Place the tractor shift lever into a low range or parking gear to prevent the tractor from rolling. Never dismount a Tractor that is moving or while the engine is running. Operate the Tractor controls from the tractor seat only. (SG-9)

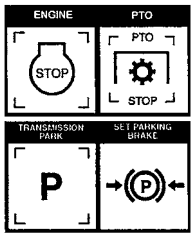

©2013 Alamo Group Inc.

OPERATION

4.STARTING THE TRACTOR

The operator must have a complete understanding of the placement, function, and operational use of all tractor controls before starting the tractor. Review the tractor operatorôs manual and consult an authorized dealer for tractor operation instructions if needed.

Essential Tractor Controls:

- Locate the ignition key/switch
- Locate the engine shut off control
- Locate the hydraulic control levers
- Locate the light control lever
- Locate the brake pedals and clutch
- Locate the PTO control
- Locate the 3 point hitch control lever
- Locate the boom operating controls (joystick or valve bank)

Before starting the tractor ensure the following:

- Conduct all pre-start operation inspection and service according to the tractor operatorôs manual.
- Make sure all guards, shields, and other safety devices are securely in place.
- The parking brake is on.
- The tractor transmission levers are in park or neutral.
- The boom operating controls are in the neutral and off position.
- The PTO control lever is disengaged.
- The hydraulic remote control levers are in the neutral position.

Refer to the tractor ownerôs manual for tractor starting procedures. Only start the tractor while seated and belted in the tractor operatorôs seat. Never bypass the ignition switch by short circuiting the starter solenoid. After the tractor engine is running, avoid accidental contact with the tractor transmission to prevent sudden and unexpected tractor movement. *OPS-B- 0003*

DANGER Never run the Tractor engine in a closed building or without adequate ventilation. The exhaust fumes can be hazardous to your health. (SG-23)

DANGER Start tractor only when properly seated in the Tractor seat. Starting a tractor in gear can result in injury or death. Read the Tractor operators manual for proper starting instructions. (SG-13)

©2013 Alamo Group Inc.

5.CONNECTING ATTACHING HEADS TO THE BOOM

1. Start by attaching the pivot bracket(3) to the boom(1) using pin(5) and hardware. Next attach the cylinder to the pivot bracket(3) using pin(8) and roll pins.

2. Then attach the dogleg(4) to the mower(2) using pin(7) and hardware.

3. Use a hoist to lower the boom(1) down to the mower(2). Insert the upper pin(6) through the end of the boom and the mower. Attach with hardware.

4. Then align the dogleg(4) and the pivot bracket(3). Attach with pin(9) and hardware.

5. Finally make sure all bolts, nuts, and pins are tightened to recommended torque. *OPS-B- 0004_D*

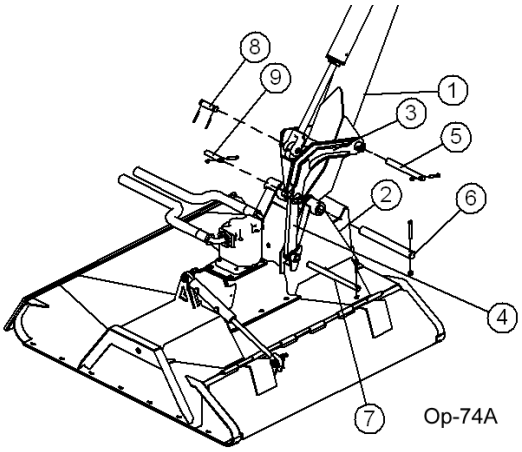

Op-74A

⚠WARNING Avoid contact with hot surfaces including hydraulic oil tanks, pumps, motors, valves and hose connections. Relieve hydraulic pressure before performing maintenance or repairs. Use gloves and eye protection when servicing hot components. Contact with a hot surface or fluid can cause serious injury from burns or scalding. (SG-34)

⚠WARNING Do not operate this Equipment with hydraulic oil or fuel leaking. Oil and fuel are explosive and their presence could present a hazard. Do not check for leaks with your hand! High-pressure oil streams from breaks in the line could penetrate the skin and cause tissue damage including gangrene. To check for a hose leak, SHUT the unit ENGINE OFF and remove all hydraulic pressure. Wear oil impenetrable gloves, safety glasses and use Cardboard to check for evidence of oil leaks. If you suspect a leak, REMOVE the HOSE and have it tested at a Dealer. If oil does penetrate the skin, have the injury treated immediately by a physician knowledgeable and skilled in this procedure. (SG-15)

6.PRE-OPERATION INSPECTION AND SERVICE

Before each use, a pre-operation inspection and service of the implement and tractor must be performed. This includes routine maintenance and scheduled lubrication, inspecting that all safety devices are equipped and functional, and performing needed repairs. DO NOT operate the unit if the pre-operation inspection reveals any condition affecting safe operation. Perform repairs and replacement of damaged and missing parts as soon as noticed. By performing a thorough pre-operation inspection and service, valuable down time and repair cost can be avoided. *OPS-U-0029*

©2013 Alamo Group Inc.

OPERATION

⚠WARNING Periodically inspect all moving parts for wear and replace when necessary with authorized service parts. Look for loose fasteners, worn or broken parts, and leaky or loose fittings. Make sure all pins have attaching hardware. Serious injury may occur from not maintaining this machine in good working order. (SG-21_A)

⚠ DANGER All Safety Shields, Guards and Safety devices including (but not limited to) - the Deflectors, Chain Guards, Steel Guards, Gearbox Shields, PTO integral shields, and Retractable Door Shields should be used and maintained in good working condition. All safety devices should be inspected carefully at least daily for missing or broken components. Missing, broken, or worn items must be replaced at once to reduce the possibility of injury or death from thrown objects, entanglement, or blade contact. (SGM-3)

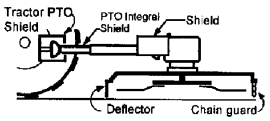

6.1 Tractor Pre-Operation Inspection/Service

Refer to the tractor operatorÕs manual to ensure a complete pre-operation inspection and scheduled service is performed according to the manufacturers recommendations. The following are some of the items that require daily service and inspection:

- Tire condition/air pressure
- Wheel lug bolts
- Steering linkage
- PTO shield
- SMV sign is clean and visible
- TractorÕs lights are clean and functional
- Tractor Seat belt is in good condition
- Tractor ROPS is in good condition
- ROPS is in the raised position
- No tractor oil leaks
- Radiator free of debris
- Engine oil level and condition
- Engine coolant level and condition
- Power brake fluid level
- Power steering fluid level
- Fuel condition and level
- Sufficient lubrication at all lube points
- Air filter condition *OPS-U-0030*

©2013 Alamo Group Inc.

6.2 Boom Unit Pre-Operation Inspection and Service

Inspect and service the boom arm and head prior to operation. Damaged and/or broken parts should be repaired and/or replaced immediately. To ensure the unit is ready for operation, conduct the following: *OPS-B- 0020*

⚠WARNING

Periodically inspect all moving parts for wear and replace when necessary with authorized service parts. Look for loose fasteners, worn or broken parts, and leaky or loose fittings. Make sure all pins have attaching hardware. Serious injury may occur from not maintaining this machine in good working order. (SG-21_A)

The operatorÕs manual and safety signs affixed on the unit contain important instructions on the safe and proper use of the equipment. Maintain these important safety features on the implement in good condition to ensure the information is available to the operator at all times.

- Ensure all safety signs are in place and legible. Replace missing, damaged, and illegible decals. *OPS-U- 0011_A*

Op-14

FRAME ASSEMBLY

- Inspect condition of mounting frame weldment.
- Inspect condition of Swivel Assy.
- Ensure all bolts and screws are in position and are properly torqued.
- Ensure all pins are in place and fastened with screws.
- Ensure frame is properly mounted to tractor and hardware is propely installed and tightened. *OPS-B- 0021_D*

©2013 Alamo Group Inc.

OPERATION

⚠WARNING Relieve hydraulic pressure prior to doing any maintenance or repair work on the Implement. Place the Mower Head on the ground or securely supported on blocks or stands, disengage the PTO, and turn off the engine. Push and pull the control Levers or Joystick several times to relieve pressure prior to starting any maintenance or repair work. (SBM-6)

⚠WARNING Never Leave the mower unattended while the head is in the raised position. The mower could fall causing serious injury to anyone who might inadvertently be under the mower. (SBM-4)

BOOM ARM ASSEMBLY

- Inspect condition of each arm section weldment
- Ensure all pins are in place.
- Ensure all bolts, nuts and rollpins are properly installed.
- Check condition of bushings at boom pivot points and hydraulic cylinder tangs.
- Ensure each hydraulic cylinder is installed and retained correctly. Ensure the proper size pins are used to retain the cylinders in place and are secured properly. *OPS-B- 0022_D*

⚠WARNING Never attempt to lubricate, adjust, or remove material from the Implement while it is in motion or while tractor engine is running. (SG-20)

HYDRAULIC LINE INSPECTION

- Check for hydraulic leaks along hoses, cylinders and fittings. **IMPORTANT**: DO NOT use your hands to check for oil leaks. Use a piece of heavy paper or cardboard to check for hydraulic oil leaks.
- Inspect the condition of the valve mounting.
- Ensure fittings are properly connected.

OPS-B- 0023_D

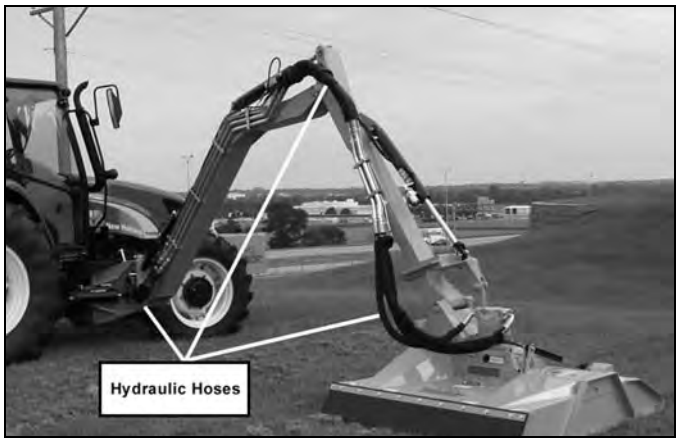

©2013 Alamo Group Inc.

⚠WARNING Do not operate this Equipment with hydraulic oil or fuel leaking. Oil and fuel are explosive and their presence could present a hazard. Do not check for leaks with you r hand! High- pressure oil str eams from breaks in th e line could penetrate the skin and cause tissue damage including gangrene. To check for a hose leak, SHUT the unit ENGINE OFF and remove all hydraulic pressure. Wear oil impenetrable gloves, safety glasses and use Cardboard to check for evidence of oil leaks. If you suspect a leak, REMOVE the HOSE and have it tested at a Dealer. If oil does penetrate the skin, have the injury treated immediately by a physician knowledgeable and skilled in this procedure. (SG-15)

HYDRAULIC PUMP/OIL RESERVOIR

- Check oil reservoir level and oil condition. (Add specific type oil if low)
- Change hydraulic oil filter and hydraulic oil according to maintenance schedule.
- Ensure there are no oil leaks and fitting are properly connected
- Inspect overall condition of hydraulic pump.
- Inspect pump drive shaft.

Check the fl uid level in the Hy draulic Tank on the Tractor, and add oil if required. As the air has been forced out of the Cylinders and Hoses, it goes into the Hydraulic Tank and reduces the volume of oil. Maintain the oil level within the sight gauge located on the side of the reservoir. Never fill the tank above the sight gauge to allow for the exp ansion of the oil. The t ank maintains pressure after the mower has been run. Stand off to one side when removing the breather cap element to prevent possible injury. *OPS-B 0024_E*

⚠WARNING Attention: Oil Filler Cap is also the Pressure Relief Cap.

Remove cap slowly to relieve pressure before removing cap completely. Stay clear to prevent being scalded with hot oil that may spray out of the tank that is still pressurized and may cause serious injury to eyes, face, and exposed skin. (Ops-0001-MISC)

⚠WARNING Avoid contact with hot surfaces including hydraulic oil tanks, pumps, motors, valves and hose connections. Relieve hydraulic pressure before performing maintenance or repairs. Use gloves and eye protection when servicing hot components. Contact with a hot surface or fluid can cause serious injury from burns or scalding. (SG-34)

©2013 Alamo Group Inc.

ROTARY HEAD INSPECTION

- Inspect blades and blade bolts for looseness and excessive wear. Rotate to 90Áto make for checking easier. Replace damaged, worn, and missing blades as complete sets to maintain rotary balance.
- Ensure motor bolts and nuts are tightened to the appropriate torque.
- Ensure rubber deflectors are in position and not damaged. Replace worn, broken, and missing sections immediately.
- Ensure hydraulic lines are properly connected to the hydraulic motor. Check for hydraulic leaks along hoses and fittings. DO NOT use your hands to check for oil leaks. Use a piece of heavy paper or cardboard to check for hydraulic oil leaks.
- Inspect the condition of deck skid shoes and hardware. *OPS-B- 0025*

⚠WARNING Do not put hands or feet under mower decks. Blade Contact can result in serious injury or even death. Stay away until all motion has stopped and the decks are securely blocked up. (SGM-09)

⚠ DANGER All Safety Shields, Guards and other safety devices includin g (but not limited to) - Deflectors, Steel Guards and Gearbox Shields must be used and maintained in go od working condition. All safety devices should be inspected carefully at least daily for missing or broken components. Missing, broken, or worn items must be replaced at once to reduce the possibility of injury or death from thrown objects, entanglement, or blade contact. (SSM-07)

©2013 Alamo Group Inc.

FLAIL HEAD INSPECTION

- Å Inspect blades and blade bolts for looseness and excessive wear. Rotate to 90Áto make for checking easier. Replace damaged, worn, and missing blades as complete sets to maintain cuttershaft balance.
- Å Ensure rubber deflectors are in position and not damaged. Replace worn, broken, and missing sections immediately.
- Å Ensure the rollers are in good condition and rotate freely.
- Å Inspect that all bolts and screws are in position and are properly torqued.
- Å Ensure hydraulic lines are properly connected to the hydraulic motor. Check for hydraulic leaks along hoses and fittings. DO NOT use your hands to check for oil leaks. Use a piece of heavy paper or cardboard to check for hydraulic oil leaks.
- Å Inspect the condition of the drive belts.
- Å Ensure the drive belt shields are in place and in good repair.
- Å Remove any grass or other debris which may be wrapped around the cuttershafts ends.
- Å Inspect the condition of deck skid shoes and hardware. *OPS-B- 0026_B*

⚠ DANGER Do not put hands or feet under mower decks. Blade Contact can result in serious injury or even death. Stay away until all motion has stopped and the decks are securely blocked up. (SFL-2)

⚠ DANGER All Safety Shields, Guards and other safety devices includin g (but not limited to) - Deflectors, Steel Guards and Gearbox Shields must be used and maintained in go od working condition. All safety devices should be inspected carefully at least daily for missing or broken components. Missing, broken, or worn items must be replaced at once to reduce the possibility of injury or death from thrown objects, entanglement, or blade contact. (SSM-07)

©2013 Alamo Group Inc.

6.3 Cutting Component Inspection

Inspect blade pan and blade assembly for the following: *OPS-U-0031*

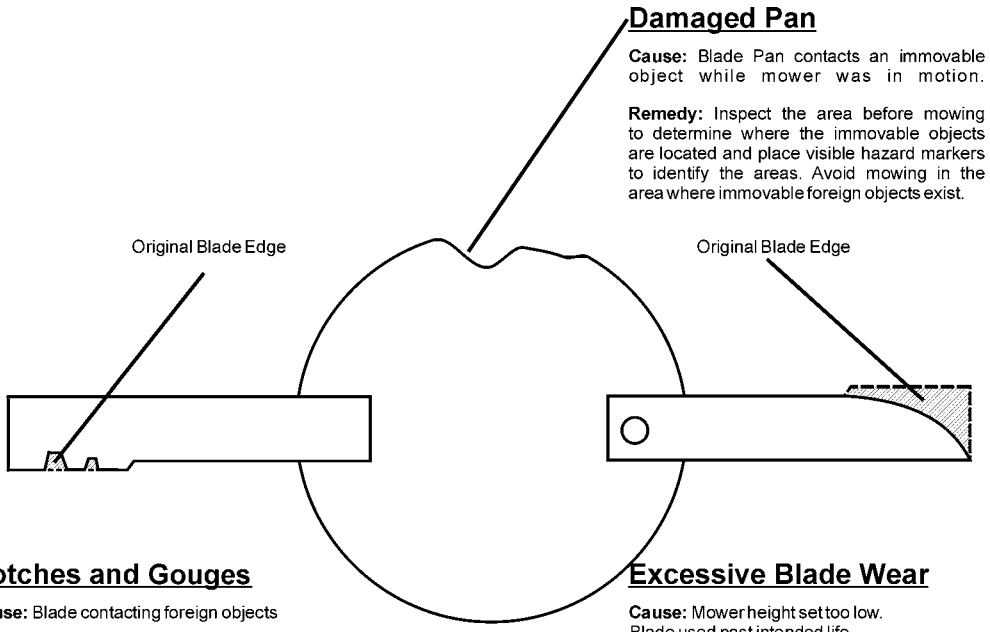

⚠ DANGER Inspect the Blades daily for abnormal wear. REPLACE BOTH BLA DES on that ca rrier IMMEDIATELY if either blade has:

- Become bent or deformed from its original shape or
- Any cracks are visible, or
- Deep gouges in the blade's surface are present, or
- Gouges or chipped areas in the cutting edge are larger than 1/2"(12.7mm), or
- The material on the leading edge has been worn away by more than 1/2(12.7mm)"

Failure to replace abnormally worn blades may lead to catastrophic failure of the blades and ejection of the broken part with tremendous force which may cause serious bodily injury or death. *OPS-U-0032*

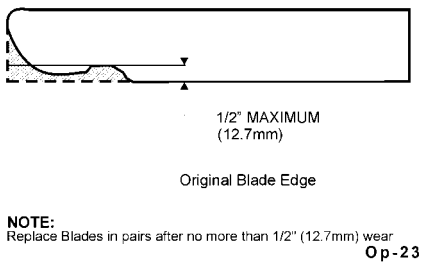

©2013 Alamo Group Inc.

Tractor PRE-OPERATION Inspection

Mower ID#_____ Make _____

Date: _____ Shift _____

⚠WARNING **Before conducting the inspection, make sure the tractor engine is off, all rotation has stopped and the tractor is in park with the parking brake engaged. Make sure the mower is resting on the ground or securely blocked up and all hydraulic pressure has been relieved.**

Item	Condition at Start of Shift	Specific Comments if not O.K.
The flashing lights function properly		
The SMV Sign is clean and visible		
The tires are in good condition with proper pressure		
The wheel lug bolts are tight		
The tractor brakes are in good condition		
The steering linkage is in good condition		
There are no visible oil leaks		
The hydraulic controls function properly		
The ROPS or ROBS Cab is in good condition		
The seatbelt is in place and in good condition		
The 3-point hitch is in good condition		
The drawbar pins are securely in place		
The PTO master shield is in place		
The engine oil level is full		
The brake fluid level is full		
The power steering fluid level is full		
The fuel level is adequate		
The engine coolant fluid level is full		
The radiator is free of debris		
The air filter is in good condition		

Operator's Signature: _____

DO NOT OPERATE an UNSAFE TRACTOR or MOWER

This Inspection Form may be freely duplicated for extra copies.

©2013 Alamo Group Inc.

Boom PRE-OPERATION Inspection

Mower ID#_____ Make _____

Date: _____ Shift _____

WARNING **Before conducting the inspection, make sure the tractor engine is off, all rotation has stopped and the tractor is in park with the parking brake engaged. Make sure the mower is resting on the ground or securely blocked up and all hydraulic pressure has been relieved.**

Table 1:

Item	Condition at Start of Shift	Specific Comments if not O.K.
The Operator's Manual is in the tractor		
All safety decals are in place and legible		
The mounting frame bolts are in place and tight		
The boom connection bolts & pins are tight		
There are no cracks in boom		
The hydraulic cylinders pins are tight		
The hydraulic pump hose connections are tight		
The hydraulic valve controls function properly		
There are no leaking or damaged hoses		
The hydraulic oil level is full		
There is no evidence of hydraulic leaks		
The blades are not chipped, cracked or bent		
The blade bolts are tight		
The deflectors are in place and in good condition		
The boom shields are in place and in good condition		
The skid shoes are in good condition and tight		
There are no cracks or holes in boom deck		
The hydraulic motor mounting bolts are tight		
The boom head spindle housing is tight and lubricated		

Operator's Signature:

_____

DO NOT OPERATE an UNSAFE TRACTOR or MOWER

©2013 Alamo Group Inc.

Cable Controlled Mowers

A control lever decal similar to the one shown below should be near the control valve to remind the operator of the lever functions.

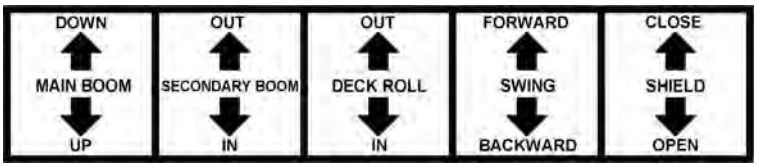

The main control valve on the Tiger Boom Mower has four sections with tapered spools, located near the right side of the steering wheel. The malfunction of a section of the valve does not necessitate the replacement of the entire ñbankò, only the faulty section. Each section of the valve controls a certain position of the boom or deck. Seated in the operators seat, the controls from left to right are #1-primary (main) boom, #2-secondary boom, #3 -deck roll, #4-boom (swivel) swing), and #5- boom (safety) shield.

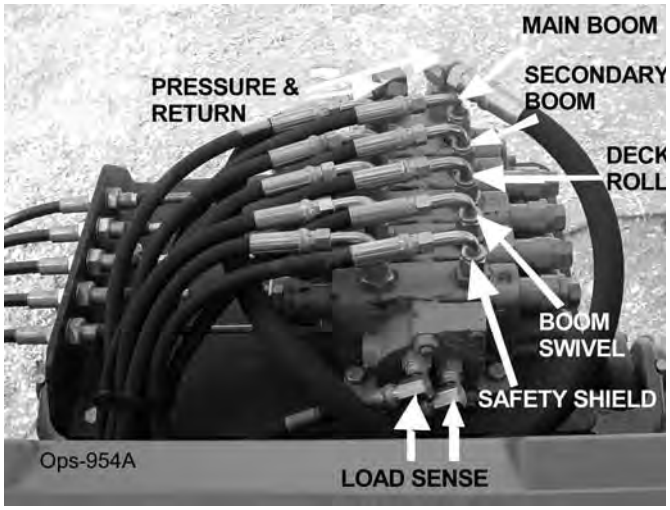

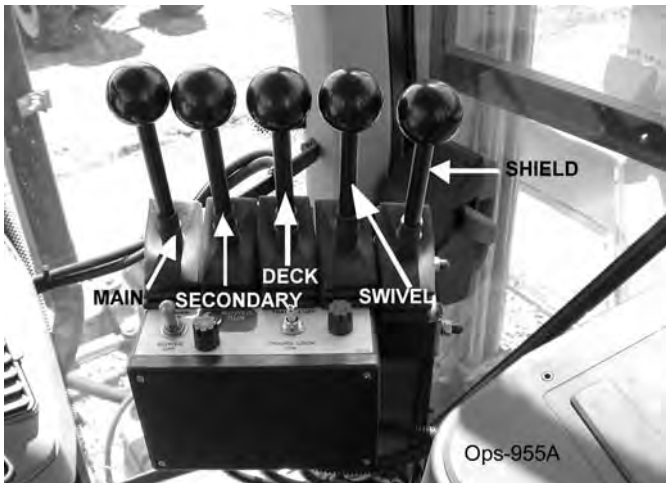

©2013 Alamo Group Inc.

6.4 Switchbox

The Safety Shield lever opens and closes the shield located on the front of the cutter head. When moving at or near the ground, always have the shield in th closed position. When mowing in the br ush or in trees above ground level the shield may be opened for easier cutting. Read and follow the warnings on the decal shown below. Do not run the cutter head into material larger than 6ò diameter.

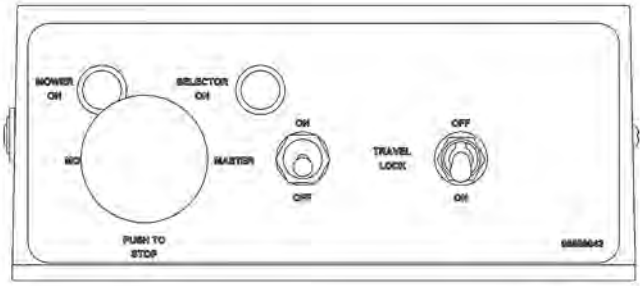

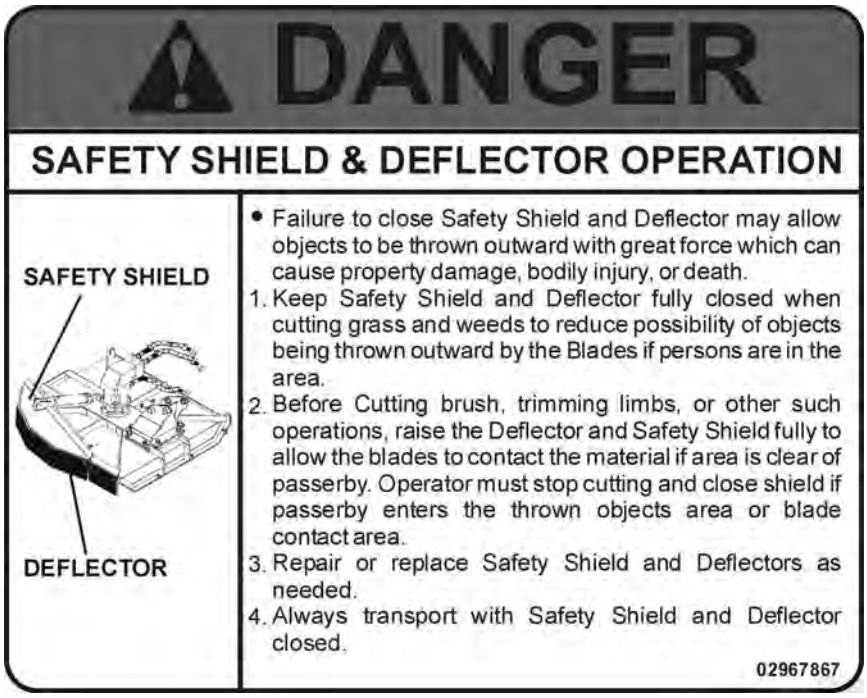

©2013 Alamo Group Inc.

LEVER #1 MAIN BOOM

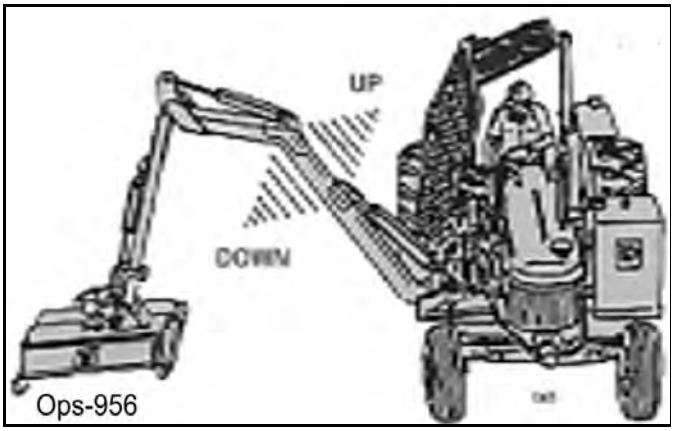

Ops-956

LEVER #2 SECONDARY BOOM

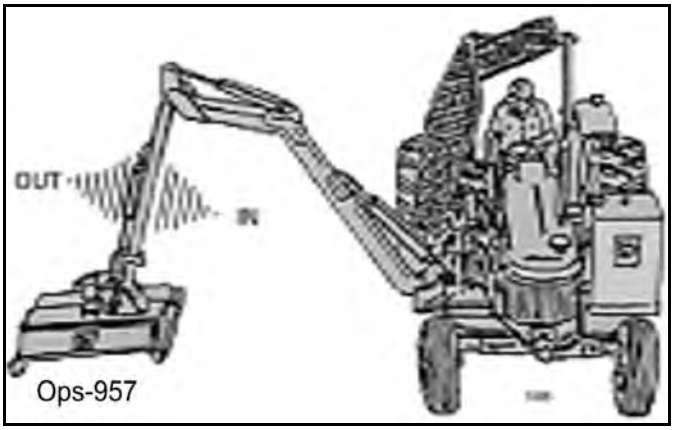

Ops-957

LEVER #3 DECK ROLL

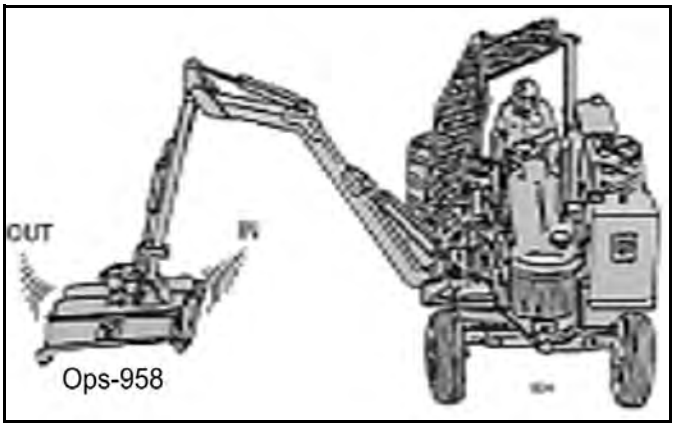

Ops-958

©2013 Alamo Group Inc.

LEVER #4 BOOM SWIVEL

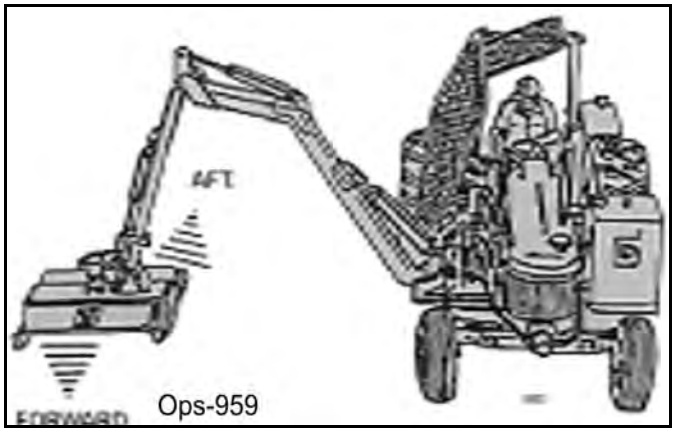

Ops-959

LEVER #5 BOOM SHIELD

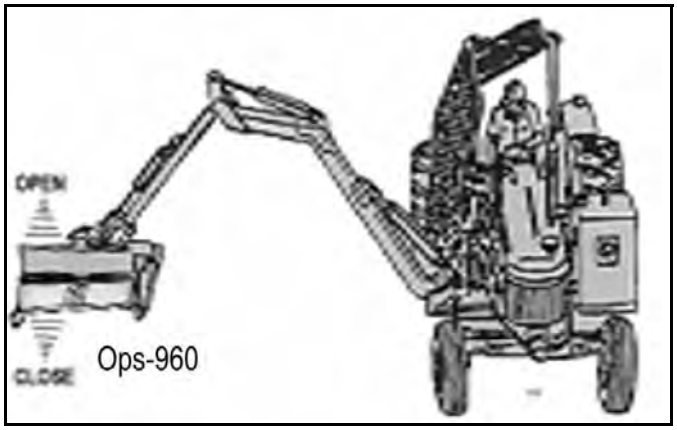

Ops-960

©2013 Alamo Group Inc.

7.Joystick Controlled Mowers

WARNING NOTE: **DO NOT** operate mower head while boom mower is in the boom rest, or in the stored position! Red ñMower Runòlight indicates mower is ñONò

The boom functions are controlled by an electronic joystick. The Joystick Master Switch enables the joystick control for controlling the boom motion functions. This switch is to be in the ñOFFò position when starting the tractor and when boom is stowed for transporting the machine.

CAUTION If the joystick control is not operating properly, turn the master switchto the ñOFFò position. Install the manual valve handle onto valve and operate the functions individually to stow boom. After boom is stowed in rest, transport the unit to the maintenance facility and contact your Tiger dealer for assistance.

CAUTION **DO NOT** attempt to operate the valve manually for mowing operations!

Note: Pushing manual valve handles ñoutòor ñawayò from the tractor cab will bring the main boom ñupò, secondary boom ñoutò, roll deck ñoutò, and swivel boom ñaftò. Pulling manual handles toward cab will let main boom ñdownò, bring secondary boom ñinò, roll deck ñinò, and swivel boom ñforwardò.

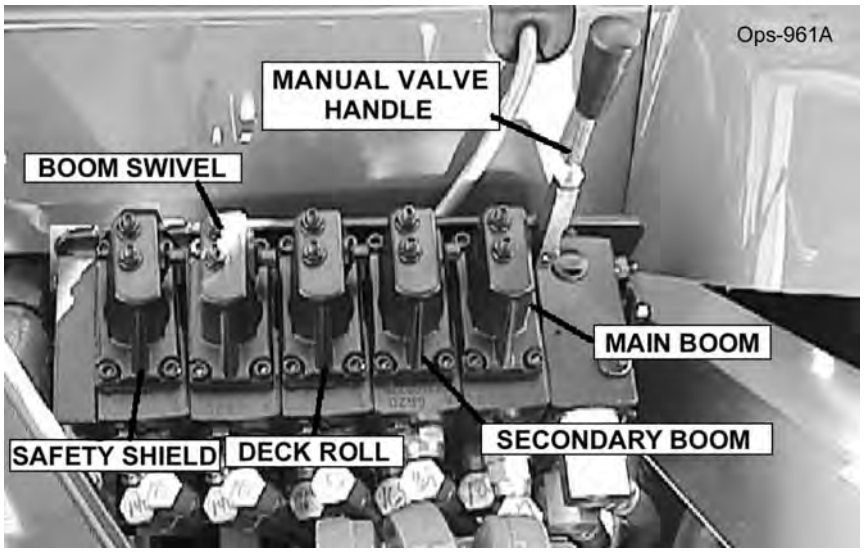

©2013 Alamo Group Inc.

7.1 Switch Box and Joystick Control

The diagrams below and on the next page show the fu nctions that are performed through the use of the joystick controller.

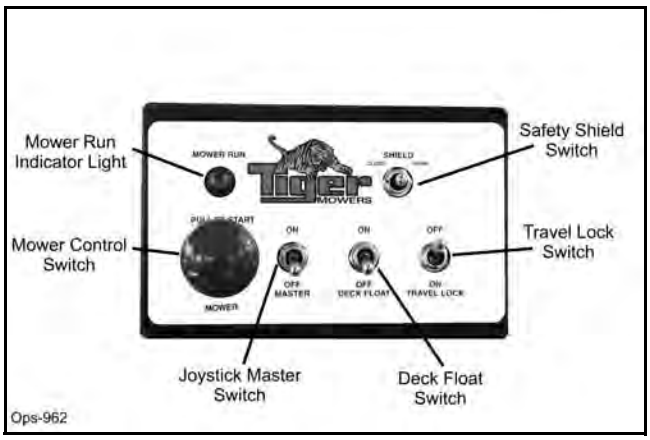

The Safety Shield switch opens and closes the shield located on the front of the cutter head. When moving at or near the ground, always have the shield in the closed position. When moving in brush or in trees above ground level the shield may be opened for easier cutting. Read and follow the warnings on the decal shown below. **Do not run the cutter into material larger than 6" diameter.**

©2013 Alamo Group Inc.

Joystick Control

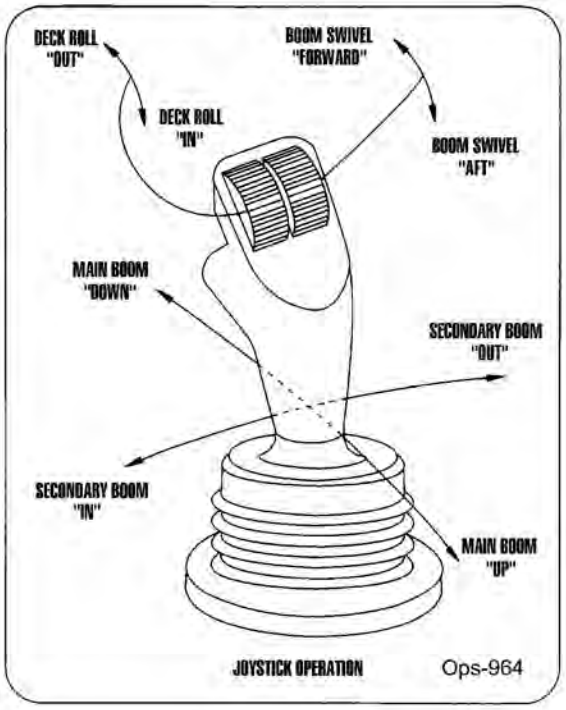

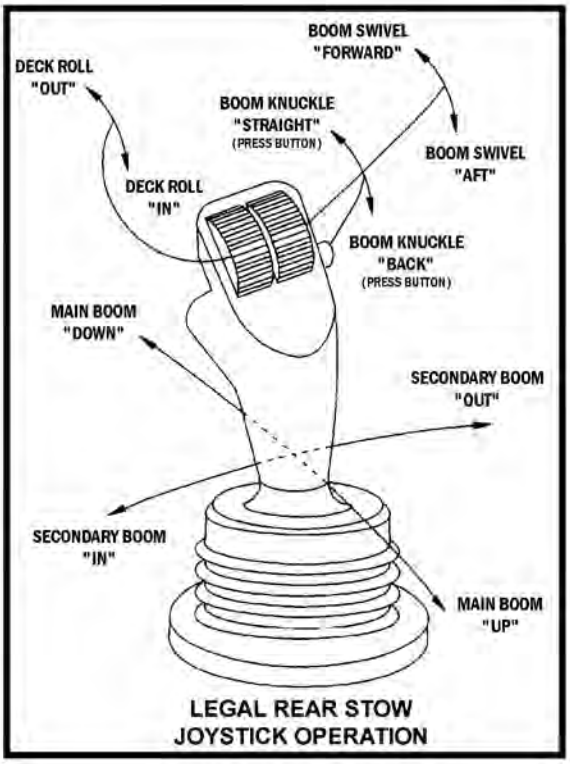

JOYSTICK FWD/BACK MOVES MAIN BOOM

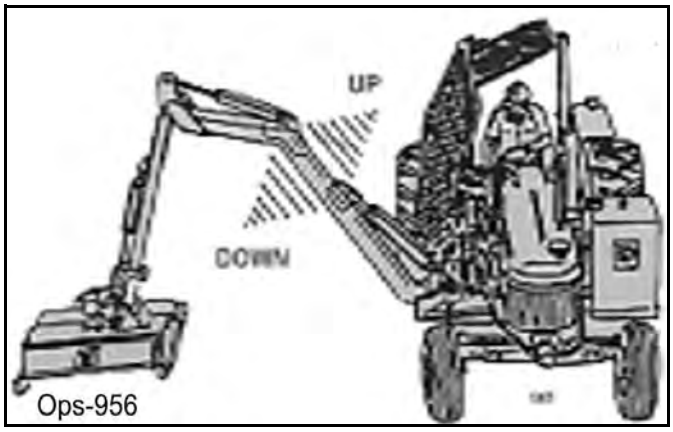

©2013 Alamo Group Inc.

JOYSTICK LEFT/RIGHT MOVES SECONDARY BOOM

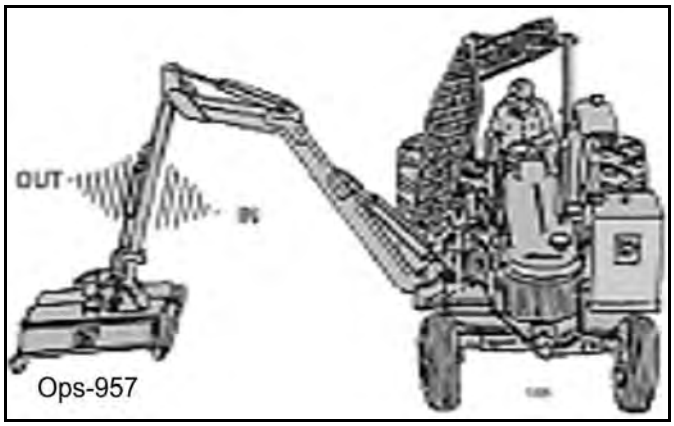

Ops-957

LEFT JOYSTICK ROLLER MOVES DECK ROLL

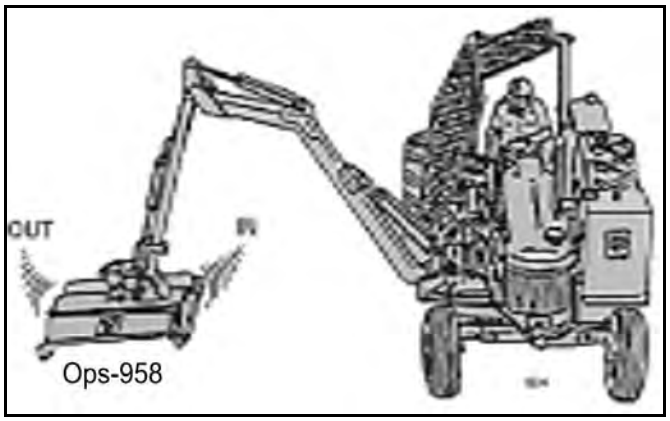

Ops-958

RIGHT JOYSTICK ROLLER MOVES BOOM SWIVEL

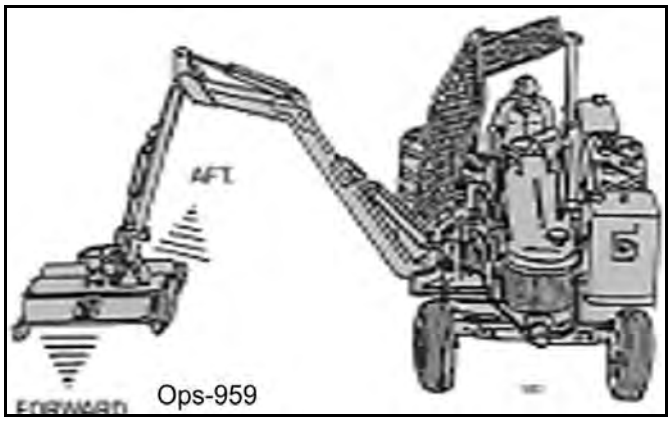

Ops-959

©2013 Alamo Group Inc.

RIGHT JOYSTICK ROLLE R WHILE PRE SSING BUTTON MOVES BOOM KNUCKLE ON A LEGAL REAR STOW BOOM

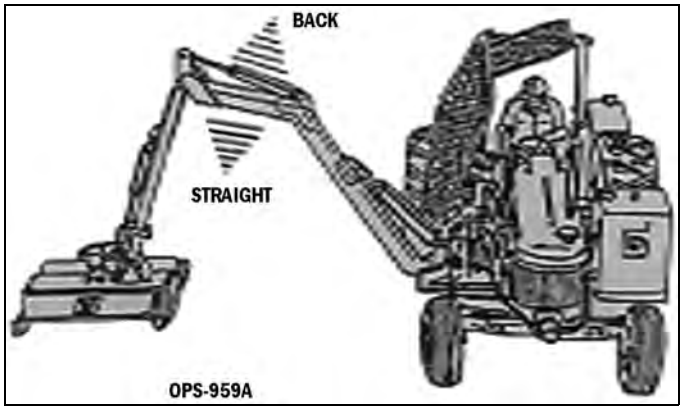

SHIELD SWITCH(on switch box) OPERATES SAFETY SHIELD

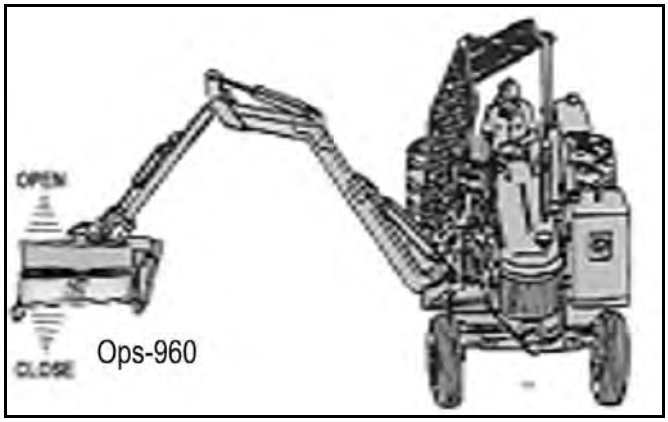

8.DRIVING THE TRACTOR AND IMPLEMENT

Safe tractor transport requires the operator to possess a thorough knowledge of the model being operated and precautions to take while driving with an attached implement. Ensure the tractor has the capacity to handle the weight of the boom and the tractor operating controls are set for safe transport. To ensure safety while driving the tractor with a boom, review the following.

Read all safety instructions. Decals on the Boom warn you of particular and multiple hazards. Some decals are attached close to part of the Boom where there is a possible hazard. Read and make sure you understand the safety messages before you operate the implement. Keep all decals clean and readable. Replace lost or damaged decals, refer to safety section for more information.

Keep all person's well clear of mower since blades can throw objects with great velocity for a considerable distance! KEEP CLEAR! *OPS-B- 0005*

©2013 Alamo Group Inc.

⚠ DANGER

Never operate the Tractor or Implement until you have read and completely understand this Manual, the Tractor Operator's Manual, and each of the Safety Messages found in the Manual or on the Tractor and Implement. Learn how to stop the tractor engine suddenly in an emergency. Never allow inexperienced or untrained personnel to operate the Tractor or Implement without supervision. Make sure the operator has fully read and understood the manuals prior to operation. (SG-4)

⚠ WARNING

Always maintain the safety signs in good readable condition. If the safety signs are missing, damaged, or unreadable, obtain and install replacement safety signs immediately. (SG-5)

⚠ DANGER

BEFORE leaving the tractor seat, always set the parking brake and/or set the tractor transmission in parking gear, disengage the PTO, stop the engine, remove the key, and wait for all moving parts to stop. Place the tractor shift lever into a low range or parking gear to prevent the tractor from rolling. Never dismount a Tractor that is moving or while the engine is running. Operate the Tractor controls from the tractor seat only. (SG-9)

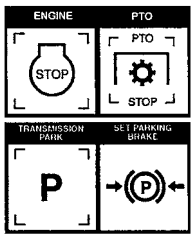

©2013 Alamo Group Inc.

⚠WARNING Transport only at speeds where you can maintain control of the equipment. Serious accidents and injuries can result from operating this equipment at high speeds. Understand the Tractor and Implement and how it handles before transporting on streets and highways. Make sure the Tractor steering and brakes are in good condition and operate properly.

Before transporting the Tractor and Implement, determine the proper transport speeds for you and the equipment. Make sure you abide by the following rules:

Test the tractor at a slow speed and increase the speed slowly. Apply the Brakes smoothly to determine the stopping characteristics of the Tractor and Implement. As you increase the speed of the Tractor the stopping distance increases. Deter mine the maximum transport speed not to exceed 20 mph (30 kph) for transporting this equipment.

Test the equipment at a slow speed in turns. Increase the speed through the turn only after you determine that the equipment can be operated at a higher speed. Use extreme care and reduce your speed when turning sharply to prevent the tractor and implement from turning over. Determine the maximum turning speed for you and this equipment before operating on roads or uneven ground.

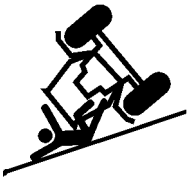

Only transport the Tractor and Implement at the speeds which allow you to properly control the equipment.

Be aware of the operating conditions. Do not operate the Tractor with weak or faulty brakes or worn tires. When operating down a hill or on wet or rain slick roads, the braking distance increases: use extreme care and reduce your speed. When operating in traffic always use the Tractorûs flashing warning lights and reduce your speed. Be aware of traffic around you and watch out for the other guy. (SG-19)

8.1 Starting the Tractor

The procedure to start the tractor is model specific. Refer to the tractor operatorûs manual for starting procedures for your particular tractor. Consult an authorized dealer if the starting procedure is unclear. Ensure the 3-point control lever is in the lowered position and the PTO is disengaged before starting the tractor. *OPS-U-0033*

©2013 Alamo Group Inc.

8.2 Brake and Differential Lock Setting

Make sure the tractor brakes are in good operating condition. Tractor brakes can be set to operate independently allowing single rear wheel braking action or locked together to provide simultaneous rear wheel braking. FOR MOST DRIVING AND OPERATING CONDITIONS, THE BRAKE PEDALS SHOULD BE LOCKED TOGETHER TO PROVIDE THE MOST EFFECTIVE BRAKING ACTION.

Always disengage the tractor differential lock when turning. When engaged the differential lock will prevent or limit the tractor from turning. During normal cutting conditions, locking the differential provides no benefit and should not be used.

OPS-U- 0013

⚠WARNING Be aware of the operating conditions. Do not operate the Tractor with weak or faulty brakes. When operating down a hill or on wet or rain slick roads, the braking distance increases; use extreme care and reduce your speed in these conditions. When operating in traffic, always use the Tractorôs flashing warning lights and reduce your speed. Be aware of traffic around you and watch out for the other guy. (Ops-0004-MISC)

⚠ DANGER BEFORE leaving the tractor seat, always set the parking brake and/or set the tractor transmission in parking gear, disengage the PTO, stop the engine, remove the key, and wait for all moving parts to stop. Place the tractor shift lever into a low range or parking gear to prevent the tractor from rolling. Never dismount a Tractor that is moving or while the engine is running. Operate the Tractor controls from the tractor seat only. (SG-9)

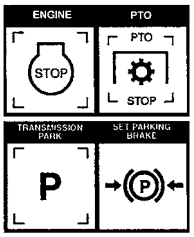

©2013 Alamo Group Inc.

8.3 Driving the Tractor and Boom

Start off driving at a slow speed and gradually increase your speed while maintaining complete control of the tractor. Never operate the tractor at speeds that cannot be safely handled or which will prevent the operator from stopping quickly during an emergency. If the power steering or engine ceases operating, stop the tractor immediately as the tractor will be difficult to control.

Perform turns with the tractor and mower at slow speeds to deter mine how the tractor with and attached implement handles a turn. Determine the safe speed to maintain proper control of the tractor when making turns. When turning with the implement the overall working length and width of the unit is increased. Allow additional clearance for the unit when turning or when passing large obstructions.

To avoid overturns, drive the tractor with care and at safe spee ds, especially when operating over rough ground, crossing ditches or slopes, and turning corners. Use extreme caution when operating on steep slopes. Keep the tractor in a low gear when going downhill. DO NOT coast or free-wheel downhill.

OPS-B- 0006

©2013 Alamo Group Inc.

OPERATION

⚠WARNING Never Leave the mower unattended while the head is in the raised position. The mower could fall causing serious injury to anyone who might inadvertently be under the mower. (SBM-4)

⚠ DANGER Always keep a careful lookout and use extreme care when working around overhead obstructions. Never allow the Mower head or boom within 10 feet of any power line. When working close to overhead power lines consult your electric company for a safe code of operation. (SBM-7)

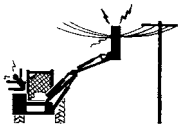

9.OPERATING THE BOOM UNIT AND ATTACHED HEAD

THE OPERATOR MUST COMPLETELY UNDERSTAND HOW TO OPERATE THE TRACTOR AND MOWER AND ALL CONTROLS BEFORE ATTEMPTING TO MOW. The operator must read and understand the Safety and Operation Sections of this manual and the tractor operatorôs manuals. These manuals must be read and explained to any operator who cannot read. Never allow someone to operate the unit without complete operating instructions.

To ensure safety to the operator, bystanders, and equipment and before starting any mowing operation. The operator must become familiar with the area to be mowed, and any obstacles and hazards contained within. Special attention should be paid to foreign debris, overhead obstructions, rough terrain, steep slopes, passersby and animals in the area.

Only operate the mower head from the tractor operatorôs seat with the seatbelt securely fastened. Only operate a boom and equipped head on cabbed tractor that is equipped with a polycarbonate safety-protected right side window or a non cabbed tractor equipped with a ROPS and operator safety screen.

Avoid operating in the reverse direction when possible. In situations where the boom and mower must be backed to access areas to be cut, make sure there are no persons or other foreign debris behind the tractor. When backing, operate the tractor at a much reduced ground speed to ensure complete control of the unit is maintained. *OPS-B- 0007*

⚠WARNING Do not mow with two machines in the same area except with Cab tractors with the windows closed. (SGM-11)

⚠WARNING Mow only in conditions where you have clear visibility in daylight or with adequate artificial lighting. Never mow in darkness or foggy conditions where you cannot clearly see at least 300 feet (90 m) in front and to the sides of the tractor and mower. Make sure that you can clearly see and identify passersby, steep slopes, ditches, drop-offs, overhead obstructions, power lines, debris and foreign objects. If you are unable to clearly see these type of items discontinue mowing. (SGM-01)

©2013 Alamo Group Inc.

⚠WARNING Avoid mowing in reverse direction when possible. Check to make sure there are no persons behind the mower and use extreme care when mowing in reverse. Mow only at a slow ground speed where you can safely operate and control the tractor and mower. Never mow an area that you have not inspected and removed debris or foreign material. (SGM-08)

⚠WARNING Never operate the mower head tilted down where the operator can see the blades of the mower. The blade could throw an object toward the operator causing serious injury or death. Never operate the mower without an Operator Protective Structure. Always wear safety glasses and a hard hat. (Ops-0005-MISC)

9.1 Foreign Debris Hazards/Overhead Obstructions

An area to be cut must first be inspected for objects that could be thrown or that could damage the machine. Walk through the area looking for fences, boulders, rocks, culverts, stumps or metal objects. Mark the inspected area with flags. If the area is dense and cannot be walked thoroughly it may be necessary to inspect a smaller area as well as possible, then trim away the part that has been inspected and can safely be removed. Walk each new area again and repeat the inspection before cutting more away. Repeat as often as necessary until the area is cleared. It can be damaging and/or dangerous to work the cutter in an area that has not been visually inspected.

Place DANGER signs at least 300 feet beyond the perimeter of the area to be worked, not just 300 feet from where the machine started operating! It is convenient in many cases to work in 300 foot sections. Move the first Danger sign to the beginning of the freshly cleared area, place it, then take the first cutting area flag up to the end of the freshly cleared area 300 feet away. Walk and inspect the next 300 feet and place the second cutting area flag. Pick up the second DANGER sign, and take it a further 300 feet along the road or trail. Note that in many cases the DANGER area will extend in front of and behind the machine as well as along each side. Post signs accordingly. *OPS-B- 0008*

⚠WARNING Extreme care should be taken when operating near loose objects such as gravel, rocks, wire, and other debris. Inspect the area before mowing. Foreign objects should be removed from the site to prevent machine damage and/or bodily injury or even death. Any objects that cannot be removed must be clearly marked and carefully avoided by the operator. Stop mowing immediately if blades strike a foreign object. Repair all damage and make certain rotor or blade carrier is balanced before resuming mowing. (SGM-05)

⚠WARNING Many varied objects, such as wire, cable, rope, or chains, can become entangled in the operating parts of the mower head. These items could then swing outside the housing at greater velocities than the blades. Such a situation is extremely hazardous and could result in serious injury or even death. Inspect the cutting area for such objects before mowing. Remove any like object from the site. Never allow the cutting blades to contact such items. (SGM-06)

©2013 Alamo Group Inc.

WARNING Mow at the speed that you can safely operate and control the tractor and mower. The correct mowing speed depends on terrain condition and grass type, density, and height of cut. Normal ground speed range is from 2 to 5 mph(3-8 kph). Use slow mowing speeds when operating on or near steep slopes, ditches, drop-offs, overhead obstructions, power lines, or when debris and foreign objects are to be avoided. (SGM-07)

9.2 Operating Speed and Ground Speed

Ground speed for mowing will depend upon the height, type, and density of vegetation to be cut. Do Not exceed 5 MPH while operating. Operate the mower at its full rated PTO speed to maintain blade speed for a clean cut. Refer to the tractor operatorÕs manual or the tractor instrument panel for the engine speed and gear to provide the required operating and desired ground speed. Make sure that the mower is operating at its full rated speed before entering the vegetation to be cut. Always start and stop cutting blades with engine near idle.

Ground speed is achieved by transmission gear selection and not by the engine operating speed. The operator may be required to experiment with several gear range combinations to determine the best gear and range which provides the most ideal performance from the implement and most efficient tractor operation. As the severity of cutting conditions increase, the ground speed should be decreased. *OPS-B- 0009*

WARNING Mow at the speed that you can safely operate and control the tractor and mower. The correct mowing speed depends on terrain condition and grass type, density, and height of cut. Normal ground speed range is from 2 to 5 mph(3-8 kph). Use slow mowing speeds when operating on or near steep slopes, ditches, drop-offs, overhead obstructions, power lines, or when debris and foreign objects are to be avoided. (SGM-07)

9.3 Operating the Attached Mower Heads

The boom can attach to and operate multiple heads one at a time for a wide range of vegetation control applications. The attached heads are designed for different applications. The head should be selected based on the mowing application and the location that the unit is being operated.

Refer to the Assembly Section of this manual to ensure the head is properly attached to the boom hitch and hydraulic lines are properly connected. *OPS-B- 0010*

DANGER There are obvious and hidden potential hazards in the operation of this Mower. REMEMBER! This machine is often operated in heavy brush and in heavy weeds. The Blades of this Mower can throw objects if shields are not properly installed and maintained. Serious injury or even death may occur unless care is taken to insure the safety of the operator, bystanders, or passersby in the area. Do not operate this machine with anyone in the immediate area. Stop mowing if anyone is within 300 feet of mower. (SGM-02)

©2013 Alamo Group Inc.

9.4 Mower Operation

The rotating parts in this machine have been designed and tested for rugged use. However, they could fail upon impact with heavy solid objects-such as steel guard rails, concrete abutments,etc., causing them to be thrown at a very high velocity. Never allow cutter head to contact such objects. Inspecting the cutting area for such objects and removing them prior to mowing can help eliminate these potiential hazards.

Once on location, lower the mower deck slightly above the material to be cut, so the mower does not have to start under a load. With the tractor at an idle, engage mower. Bring tractor R.P.M. up to 1900-2200 R.P.M. and **slowly** lower deck to ground level.

A flail mower deck should be carried so that the part of the deck weight is carried by the boom and part carried by the ground roller, when moving on the ground. When the flail mower is carried this way, the ground roller follows the contour of the ground more easily during mowing operations.

The rotary mower deck should always be carried rather than dragged on the skid shoes when mowing on the ground. Dragging the rotary mower deck increases the side loads on the boom, decreases the horsepower available to the cutter head, and reduces the ability of the accumulator the carry part of the weight of the boom during mowing operations.

⚠WARNING When rotating parts are in motion, serious injury may occur if caution is not used or danger is not recognized. Never allow bystanders within **300 feet** of the machine when in operation. Extreme care should be taken when operating near loose objects-such as gravel, rocks, and debris. These conditions should be avoided.

9.5 50” & 60” Boom Rotary

The 50ò & 60ò boom rotary brush mower was designed for cutting brush and foliage up to 6 inches in diameter or multiple branches that have a total cross section area equivalent to one 6 inch branch.

During mower operation, the hand throttle must be used to maintain engine speed at 1900-2200 R.P.M. This prevents radical changes in mower spindles speed, reducing the possibility of cutter assembly damage.

The horizontal positioning action of the boom is designed to position the cutting head and provide a limited pressure relief when excessive pressure is applied to the boom. Do not force the cutting head into heavy branches or stumps. Damage to the unit may result.

⚠ CAUTION When using the rotary cutting head for trimming trees and shrubs, let the mower saw into them. Do not lower the mower head down directly into a tree or stump. The mower blades are designed to cut with the end, and misuse can cause damage to the blade and a hazardous situation for the operator.

⚠ CAUTION Powering the boom down, forcing mower deck onto ground may damage mower deck and its attachment to the boom, creating a potentially hazardous situation.

To ensure a clean cut, engine speed should be maintained at approximately 1900-2200 R.P.M. If the tractor slows to less than 1800 R.P.M., shift to the next lower gear. DO NOT ride the clutch, this will cause premature clutch failure. **The engine should not be operated at any time at more than 2400 R.P.M. on the tractor tachometer.**

©2013 Alamo Group Inc.

OPERATION

For cutting brush, it is usually best to stop the tractor and swivel the boom and mower into foilage. The horizontal positioning action of the boom is designed to position the cutting head and provide a limited pressure relief when excessive pressure is applied to the boom.

CAUTION **DO NOT** use excessive force when positioning cutting head into heavy branches or stumps. Damage to the unit may result. It is best to let the cutter head ñeat awayò slowly at heavy cutting jobs.

CAUTION If foliage falls on top of mower deck causing tractor to become unstable, move the boom ñForwardò and ñOutò to relieve tipping of the tractor. Lower mower deck to ground and shut down unit. After all motion stops, remove foliage from mower deck.

The mower will operate more efficiently in tougher conditions and with less power if the knives are kept sharp. If the mower begins to vibrate, stop the tractor, check for wire wrapped in the spindle or damaged knives. When replacing knives, replace all knives with new knives to ensure proper balance so the mower will not vibrate. Severe vibration will result, if knives with unequal wear are used.

Begin a pass at the top side of the trees and work down with each consecutive pass. When cutting trees and shrubs, use a lower speed to allow the knives time to cut as well as mulch the foliage.

WARNING If bystanders approach within 300 feet while mower is in operation turn mower switch ñOFFò immediately! After shutdown, never leave the tractor or allow bystanders to approach within **300 FEET** of the unit until all motion stops completely.

If cutter shaft jams and stops, turn mower switch to ñOFFò, and swivel boom ñAFTò. Normally this action will clear the cutter head. If not, roll mower deck until adjacent to the secondary boom, then lower boom to rest mower deck on ground. Shut off the tractor, set parking break, allow all motion to cease. At that point it is safe to leave the tractor and clear the cutter heads manually.

Begin each pass at the top side of the trees and work down with each consecutive pass. Use a low speed to allow the cutting blades time to mulch as well as cut the foliage. When the initial pass has been made, disengage the mower, and return boom to a safe travel position. Return to starting point and make next pass, etc..

After the first day of operation, all bolts should be checked and tightened securely. This should be done periodically to ensure the bolts do not become loose and cause damage to the tractor or mower, or injury to the operator.

©2013 Alamo Group Inc.

When cutting trees and brush approach material to be cut with the head perpendicular to material. The cutting edge of the blades should be the only elements in contact with material. The blade bar should not contact with material. The mower head and blades should be moved perpendicularly into the material rather lowering the mower head on top of material. If the blade bar edges are gouged or rounded from wear, the mower head is being used incorrectly in an abusive manner. The blade bar is not intended to cut material or to be a wear item like the blades. Do Not allow the blades or blade bar to contact the ground, rocks or solid object s. Contact with the ground can result in rocks and solid objects being thrown out from under the mower head which can cause serious injuries to the operator and bystanders. This type of operation can lead to bent or broken blade bars, broken blade bolts and broken blade bar assembly bolts which can be dangerous to the operator and bystanders.

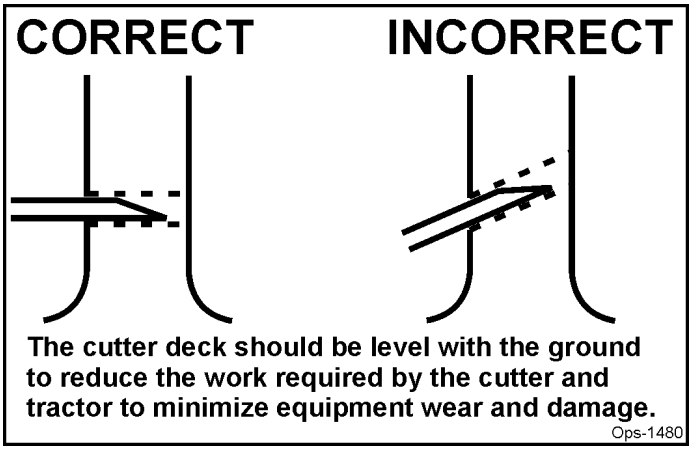

The cutter deck should be level with the ground to reduce the work required by the cutter and tractor to minimize equipment wear and damage.
Ops-1480

(OPS-R-220)

9.6 50” Boom Flail

The 50ôboom flail mower was designed for cutting brush and foliage up to 3 in ches in diameter or multiple branches that h ave a total cross section area equivalent to one 3 inch branch. Cutting multiple limbs at the same time ma y overload the mower causing it to slow down or stall completely. Regardless of the size of material being cut, the cutter shaft speed must be maintained. To ensure that the cutter shaft is running at maximum speed, run the tractor at full throttle during mowing operations. If the cutter shaft slows to the point that the knives are folding back, move the mower head away from the foliage and allow the cutter shaf t to regain full speed.

⚠WARNING Operating the mo wer in a manner that allows the knives to continually fold bac k or allowing knive lugs to contact foliage will cause permanent damage to the cutter shaft drum, knives, and knife attachment parts.

⚠WARNING The 50ò boom flail cutter shaft is designed for standard rotation (same rotation as the tractor wheels during forward travel). **Never operate the cutter shaft in reverse rotation.** Operating this mower in reverse rotation may cause objects to be thrown out the front of the mower head.

⚠WARNING The 50ò boom flail equipped with free swinging brush knives is intended for brush cutting only. Cutting grass is not recommended.

©2013 Alamo Group Inc.

⚠WARNING Do not allow knives to cut down to the ground. Position ground roller to maintain knife arc at a minimum of 2 inches above the ground. Knife contact or lug contact with ground will cause permanent damage to cutter shaft, knives, and knife attachment parts.

9.7 63” Boom Flail

The 63ò boom flail mower was designed for cutting grass. The cutter shaft speed must be maintained for proper cutting. To insure that the cutter shaft is rotating at maximum speed, run tractor at full throttle during mowing operations. If cutter shaft slows to the point that the knives are folding back against the cutter shaft, move the mower head away from the foliage and allow the cutter shaft to regain full speed.

⚠ DANGER The rotating parts of this machine have been designed and tested for rugged use. However, the blades could fail upon impact with heavy, solid objects such as metal guard rails and concrete structures. Such impact could cause the broken objects to be thrown outward at very high velocities. To reduce the possibility of property damage, serious injury, or even death, never allow the cutting blades to contact such obstacles. (SGM-4)

⚠ DANGER All Safety Shields, Guards and Safety devices including (but not limited to) - the Deflectors, Chain Guards, Steel Guards, Gearbox Shields, PTO integral shields, and Retractable Door Shields should be used and maintained in good working condition. All safety devices should be inspected carefully at least daily for missing or broken components. Missing, broken, or worn items must be replaced at once to reduce the possibility of injury or death from thrown objects, entanglement, or blade contact. (SGM-3)

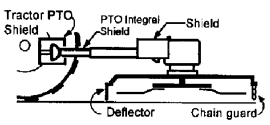

⚠WARNING Many varied objects, such as wire, cable, rope, or chains, can become entangled in the operating parts of the mower head. These items could then swing outside the housing at greater velocities than the blades. Such a situation is extremely hazardous and could result in serious injury or even death. Inspect the cutting area for such objects before mowing. Remove any like object from the site. Never allow the cutting blades to contact such items. (SGM-06)

©2013 Alamo Group Inc.

9.8 Shutting Down the Attached Head- For Standard Equipment

To shut down attached mower head, first bring the tractor to a complete stop. Decrease engine RPM to idle then disengage cutterhead. The mower head will come to a complete stop within a suitable amount of time. Do not engage or disengage the cutterheads at a high RPM unless there is an emergency situation.

Park the tractor on a level surface, place the transmission in park or neutral and apply the parking brake, shut down the engine, remove the key, and wait for all motion to come to a complete stop before exiting the tractor. *OPS-B- 0011_D*

⚠ DANGER BEFORE leaving the tractor seat, always set the parking brake and/or set the tractor transmission in parking gear, disengage the PTO, stop the engine, remove the key, and wait for all moving parts to stop. Place the tractor shift lever into a low range or parking gear to prevent the tractor from rolling. Never dismount a Tractor that is moving or while the engine is running. Operate the Tractor controls from the tractor seat only. (SG-9)

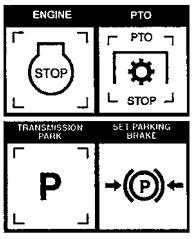

©2013 Alamo Group Inc.

OPERATION

10.TRACTOR, BOOM, AND ATTACHED HEAD STORAGE

Properly preparing and storing the unit at the end of the season is critical to maintaining its appearance and to help ensure years of dependable service. The following are suggested storage procedures:

- Å Thoroughly clean all debris from boom and head to prevent damage from rotting grass and standing water.
- Å Lubricate all grease points and fill oil levels according to the maintenance lubrication schedule.
- Å Tighten all bolts to the proper torque. Ensure all pins and other hardware are in place.
- Å Check the boom arm and head for worn and damaged parts. Perform repairs and make replacements so that the mower will be ready for use at the start of the next season.
- Å Store the unit in a clean and dry location.
- Å Use spray touch-up enamel where necessary on bare metal surfaces to prevent rust and to maintain the appearance of the mower.

OPS-B- 0012_C

⚠ DANGER Never allow children to play on or around Tractor or Implement. Children can slip or fall off the Equipment and be injured or killed. Children can caus e the Implement to shif t or fall crushing themselves or others. (SG-25)

⚠ DANGER BEFORE leaving the tractor seat, always set the parking brake and/or set the tractor transmission in parking gear, disengage the PTO, stop the engine, remove the key, and wait for all moving parts to stop. Place the tractor shift lever into a low range or parking gear to prevent the tractor from rolling. Never dismount a Tractor that is moving or while the engine is running. Operate the Tractor controls from the tractor seat only. (SG-9)

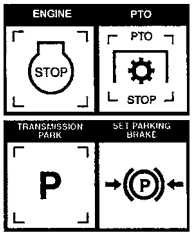

⚠ WARNING Perform service, repairs and lubrication according to the maintenance section. Ensure the unit is properly lubricated as specified in the lubrication schedule and all bolts and nuts are properly torqued. Failure to properly service, repair and maintain this Implement in good operating condition could cause component failure and possible serious injury or even death. (SG-35)

11.TRANSPORTING THE TRACTOR AND IMPLEMENT

Inherent hazards of operating the tr actor and implement and the pos sibility of accidents are not lef t behind when you finish working in an area. Therefore, the operator must employ good judgement and safe operation practices when transporting the tractor and implement between locations. By using good judgement and following safe trans port procedures, the poss ibility of accidents while moving between locations can be substantially minimized. *OPS-U- 0017*

©2013 Alamo Group Inc.

11.1 Placing Boom Arm on Boom Arm Rest - For Standard Equipment

Before transporting tractor between locations, idle the tractor engine, disengage the attached head, and wait for all head motion to come to a complete stop. Place the boom in its storage cradle rest support and then turn the joystick master switch to the OFF position.

- Å Retract Deck Roll cylinder completely.
- Å Push Secondary cylinder approximately 1/2 way out.
- Å Raise Main boom approximately to 60Á
- Å Swing boom back slowly until it is straight back.
- Å For a 3-point boomrest or a single column boomrest, position the secondary in the cradle. Carefully avoid pinching any hoses.
- Å For a open stow style boomrest, lower the Main boom onto rest and bring the Secondary boom in until it is sitting on the boomrest.
- Å For a Legal Stow style boomrest, retract the secondary and knuckle cylinders completely. Lower the Main boom onto rest. Slowly extend the secondary cylinder until the secondary boom contracts the side of the boomrest saddle. Next, slowly extend the knuckle cylinder until the secondary sets on the bottom part of the boomrest saddle.

The boom is now in the transport position. Turn on any electronic travel locks at the switchbox.

To remove the boom from the Boom Rest, first turn off any electronic travel locks at the switchbox then retract the knuckle cylinder (if applicable) then swing the Secondary boom out. Raise the Main boom approximately 6 inches. Swivel the boom forward to the desired position. *OPS-B- 0013_D*

©2013 Alamo Group Inc.

11.2 Transporting on Public Roadways

Extreme caution should be used when transporting the tractor and mower on public roadways. The tractor must be equipped with all required safety warning features including a SMV emblem and flashing warning lights to alert drivers of the tractorôs presence. Remember that roadways are primarily designed for automotive drivers and most drivers will not be looking out for you, therefore, you must look out for them. Check your side view mirrors frequently and remember that vehicles will approach quickly because of the tractorôs slower speed. Be extremely cautious when the piece of equipment that you are driving, is wider than the tractor tire width and/or extends beyond your lane of the road. *OPS-B- 0014*

The SMV (Slow-Moving Vehicle) emblem is universal symbol used to alert drivers of the presence of equipment traveling on roadways at a slow speed. SMV signs are a triangular bright orange with reflective red trim for both easy day and night visibility. Make sure the SMV sign is clean and visible from the rear of the unit before transporting the tractor and implement on a public roadway. Replace the SMV emblem if faded, damaged, or no longer reflective. *OPS-U- 0020*

Make sure that all tractor flashing warning lights, headlights, and brake/taillights are functioning properly before proceeding onto public roads. While newer model tractors have plenty of lighting to provide warning signals and operating lighting, most older models where only equipped with operating lights. Consult an authorized tractor dealer for lighting kits and modifications available to upgrade the lighting on older tractor models. *OPS-B-0015*

©2013 Alamo Group Inc.

When operating on public roads, have consideration for other road users. Pull to the side of the road occasionally to allow all following traffic to pass. Do not exceed the legal speed limit set in your state or municipality for agricultural tractors. Always stay alert when transporting the tractor and mower on public roads. Especially in busy cities, the boom extends to right farther then the tractors width, so be careful there are no bystanders, poles, large obstructions or any vehicles that may be in path of the mower head or boom. Use caution and reduce speed if other vehicles or pedestrians are in the area. *OPS-B- 0016*

⚠ DANGER Never allow children or other persons to ride on the Tractor or Implement. Falling off can result in serious injury or death. (SG-10)

⚠WARNING Make certain that the "Slow Moving Vehicle" (SMV) sign is installed in such a way as to be clearly visible and legible. When transporting the Equipment use the Tractor flashing warning lights and follow all local traffic regulations. (SG-6)

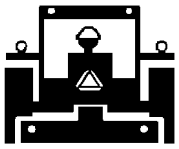

Reduce speed before turning or applying the brakes. Ensure that both brake pedals are locked together when operating on public roads. *OPS-U- 0023*

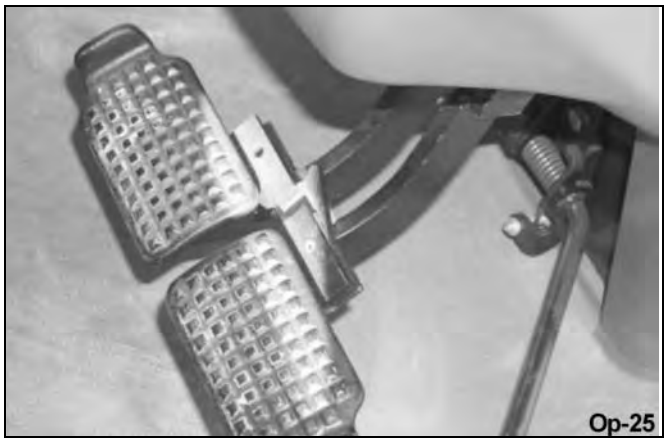

©2013 Alamo Group Inc.

11.3 Hauling the Tractor and Implement

Before transporting a loaded tractor and implement, measure the height and width dimensions and gross weight of the complete loaded unit. Ensure that the load will be in compliance with the legal limits set for the areas that will be traveled through. *OPS-U- 0024*

DANGER

When transporting Boom Mower on a truck or trailer, the height or width may exceed legal limits when the boom is in the transport position. Contact with side o r overhead structures or power lines can cause property damage or serious injury or death. If necessary lower boom to reduce height and/or remove mowing head to reduce width to the legal limits. (SBM-8)

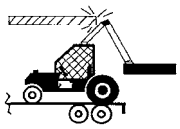

Use adequately sized and rated trailers and equipment to transport the tr actor and implement. Consult an authorized dealer to determine the proper equipment required. Using adequately sized chains, heavy duty straps, cables and/or binders, securely tie down both the front and rear of the tractor utilizing the proper tie down locations as specified by the tractor manufacturer. *OPS-U- 0025*

©2013 Alamo Group Inc.

Arrange the chains so that when tightened, the chains are pulling dow nward and against themselves. Carefully tighten the securing chains or other fasteners using boomers or binders to apply maximum tension. Use extre me care when attaching and removing the securing devices as the extreme tension involved when released has the potential to inflict serious injury.

While hauling the tractor and implement, make occasional stops to check that the tractor and implement have not moved or shifted and that the securing chains have maintained tension. If during transport a hard braking, sharp turning, or swerving action was performed, stop at the next safe location to inspect the security of the load. *OPS-U- 0026*

⚠ CAUTION If trailer is not perfectly level, the boom will tend to swing towards the lower side. Have other personnel ready to control its swinging motion when cylinder pin is removed. Make sure the personel are not in a position to be hit or crushed by a swinging boom.

Retract swivel cylinder and secure to main frame. Pivot boom forward to the center of flat bed. Lower deck onto the trailer bed, and shut off the tractor. The tractor and the mower head should now be chained down securely to the trailer bed.

⚠ CAUTION If any part of this op erating section, or any other section of th is manual is not comp letely understood, contact your Tiger dealer or the address on the cover of this m anual for assistance!

©2013 Alamo Group Inc.

©2013 Alamo Group Inc.

MAINTENANCE SECTION

©2015 Alamo Group Inc.

MAINTENANCE

General Instructions

Tiger Mowers are designed for high performance and rugged durability, yet with simplified maintenance. The purpose of this section of the manual is to help the operator in the regular servicing of the mower. Regular maintenance at the intervals mentioned will result in the maximum efficency and long life of the Tiger Mower.

When you purchase a Tiger Mower you also acquire another valuable asset, Tiger's parts organization. Our rapid and efficent service has guaranteed the customer satisfaction for many years. Tiger parts keep up with the demands for efficiency, safety and endurance expected of the Tiger Mower.

Maintenance Precautions

- Be sure end of grease gun and zerks are clean before using. Debris injected into bearings, etc. with grease will cause immediate damage.
- DO NOT use a power grease gun to lubricate bearings. These require very small and exact amounts of lubrication. Refer to the detailed maintenance section for specific lubrication instructions. DO NOT over-grease bearings.
- Lexan windows should be washed with mild soap or detergent and lukewarm water, using a soft clean sponge or soft cloth. DO NOT use abrasive or alkaline cleaners or metal scrapers on lexan windows!
- Be alert to maintenance indicators such as the in-tank filter pressure gauge, hydraulic reservoir sight gauge, etc. Take the required action to correct any problems immediately.
- Release of energy from pressurized systems may cause inadvertent actuation of cylinders, or sudden release of compressed springs. Before disconnecting any hoses, relieve pressure by shutting tractor off, setting cutter on ground and actuating lift valve handles.

⚠WARNING DO NOT use hands to check for suspected leaks in hydraulic hoses! Hydraulic fluid escaping under pressure can have sufficient force to penetrate skin and cause serious injury. If fluid is injected into skin, it must be surgically removed within a few hours or gangrene may result. Use a small piece of wood or cardboard, not hands, to search for pin hose leaks. Be sure all connections are tight and hoses and lines are not damaged before applying pressure.

Break in Period

In addition to following the break-in instructions for your particular tractor, the in-tank hydraulic fluid filter should be replaced after the first 50 hours of service. Thereafter the filter should be replaced every 500 hours, or yearly, which ever comes first.

Re-torque wheel lugs after first five hours of operation and periodically thereafter. See torque specifications listed in the tractor's service manual for your particular model. **Wheel lugs must always be re-torqued whenever a wheel is removed and reinstalled.**

⚠ DANGER Never work under the Implement, the framework, or any lifted component unless the Implement is securely supported or blocked up to prevent sudden or inadvertent falling which could cause serious injury or even death. (SG-14)

©2015 Alamo Group Inc.

⚠WARNING Do not modify or alter this Implement. Do not permit anyone to modify or alter this Implement, any of its components or any Implement function. (SG-8)

⚠WARNING Relieve hydraulic pressure prior to doing any maintenance or repair work on the Implement. Place the Mower Head on the ground or securely supported on blocks or stands, disengage the PTO, and turn off the engine. Push and pull the control Levers or Joystick several times to relieve pressure prior to starting any maintenance or repair work. (SBM-6)

⚠DANGER Always disconnect the wire leads from the mower pump solenoid before performing service on the Tractor or Mower. Use caution when working on the Tractor or Mower. Tractor engine must be stopped before working on Mower or Tractor. The Mower Blades could inadvertently be turned on without warning and cause immediate dismemberment, injury or death. (SBM-12a)

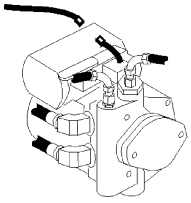

MAINTENANCE OF CRANKSHAFT ADAPTER ASSEMBLY
(RIGID ENGINE MOUNT TRACTORS ONLY)

If replacement of components of the crankshaft adapter assembly is required, follow the assembly procedures shown below. Seat rubber grommet completely into counterbore, then seat steel grommet completely into rubber grommet while rubber grommet is supported.

(ASM-JD-0051 CRANKSHAFT ADAPTER MAINTENANCE)

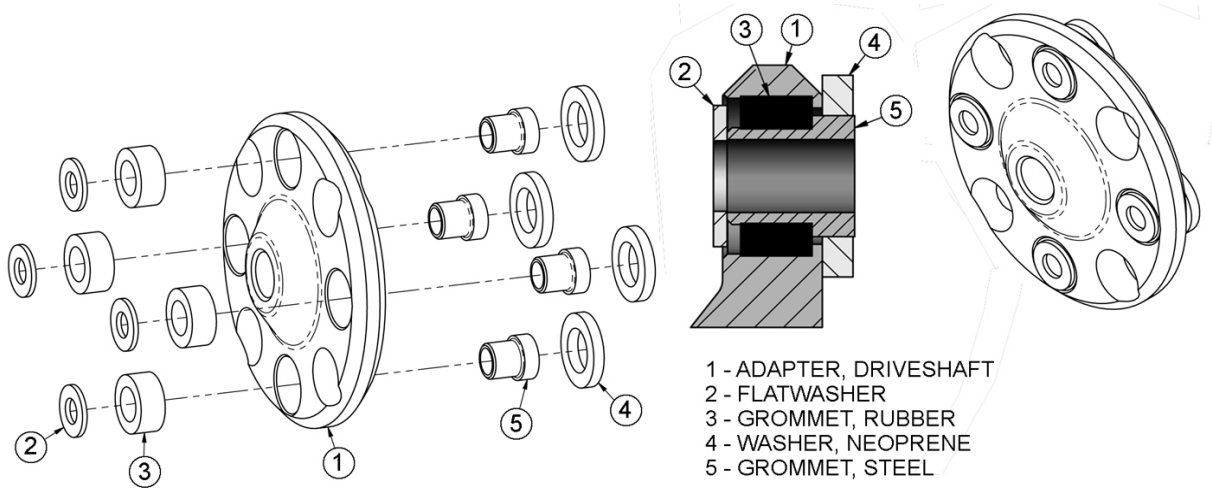

©2015 Alamo Group Inc.

Regular Maintenance

The intervals at which regular servicing should be done are based on hours of operation. Use the tractors hour meter to determine when regular servicing is required.

Refer to the Det ailed Maintenance section for futher instructions on greasing. Copy and use the Daily Maintenance sheet located at the end of this section.

Daily or Every 8 Hours

ITEM	SERVICE	COMMENTS
Drive Shaft Yoke, U-Joint & Stub Shaft	Grease	Grease as instructed in detailed maintenance section
Pump Drive Shaft Coupler	Check and Lube	Insure driveshaft end play
Crankshaft Adapter	Check rubber grommets	Replace grommets if damaged or missing
Pivot Points	Lubricate	Inject grease until it appears at end
Hydraulic Fittings	Check for leaks	Tighten when needed. Do Not use hands to check for leaks, see maint. precautions
Knives	Check	Inspect for missing or damaged knives, change as needed.
Spindle mouting bolts spindle to deck)	Check	Torque to 315 ft. lbs. lubricated Torque to 357 ft. lbs. dry
Knife mounting bolts (knife to disk or blade bar)	Check	Pre-lubricate threads with anti-seize torque to 800 ft. lbs.
Disk/Blade Bar mounting bolts (disk/blade bar to spindle)	Check	Torque to 180 ft. lbs. lubricated Torque to 204 ft. lbs. dry
Belts	Check/Adjust	Check if broken, tighten as required
Main Frame and Deck	Check	Retorque bolts to torque specifications in this section
Hydraulic Fluid Level	Check	Add if required per fluid recommendations
Rear Flail Drive(if applicable) Bear Flange and Shaft Coupler	Lubricate	Grease as instructed in detailed maintenance section
Cutter Shaft and	Lubricate	Grease as instructed in
Boom		

©2015 Alamo Group Inc.

Ground Roller	detailed maintenance section

WEEKLY OR EVERY 40 HOURS

ITEM	SERVICE	COMMENTS
Rotary Spindle	Lubricate	Every 40 hours or weekly

WEEKLY OR EVERY 50 HOURS

ITEM	SERVICE	COMMENTS
In Tank Hyd. Fluid Filter **10 micron filter**)	Change	Change after first 50 hours only, then every 500 hours or yearly
In-Line High Pressure Filter (**10 micron filter**)	Change	Change after first 50 hours only, then every 500 hours or yearly

MONTHLY OR EVERY 150 HOURS

ITEM	**SERVICE**	**COMMENTS**
Hydraulic Fluid Level	Check	Add as needed
Hyd. Tank Breather	Clean/Check/Replace	Clean or replace element as required

Rear Tire Type	Max P.S.I.
480/80R38	29
18.4-34	26
18.4-38	26

YEARLY OR EVERY 500 HOURS

ITEM	**SERVICE**		**COMMENTS**
Spindle Grease Hyd. Tank Fluid In Tank Hyd. Fluid Filter (**10 micron filter**)	Change Change Change		
In-Line HP Filter (**10 micron filter**)	Change	or	Change when indicated by restriction indicator.
Hyd. Tank Breather	Change		

©2015 Alamo Group Inc.

TROUBLESHOOTING

SYMPTOMS	CAUSE	REMEDY
Vibration	1. Loose bolts	1. Check all bolts and tighten to recommended torque specs.
	2. Cutter assembly unbalanced	2a. Check for damaged blades, disc or cuttershaft. Replace if needed. 2b. Check for wire, rope, etc. entangled in the cutter assembly
Mower will not lift	1. Hyd. Fluid Low	1. Check and refill hyd fluid
	2. Leaks in line ROU	2. Tighten or replace fittings and hoses
	3. Faulty relief valve	3. Check pressure in line. Line pressure in control valve should be at least 2500 P.S.I.
	5. Faulty cylinder	5. Inspect, repair or replace cylinder
Mower will not start or run	1. Blown fuse	1. Check fuse between mower switch and ignition/replace
	2. Ball valves closed	2. Make sure valves are open
	3. Low oil level	3. Check hyd. tank and fill
	4. Line leak	4. Check all fittings and lines, re-tighten or replace
	5. Electronic solenoid faulty	5a. Without the tractor running, turn the mower switch to on. A low audible click should be heard if the solenoid is engaging the solenoid spool. If click is not heard, leave switch in on position and with a screwdriver or other steel object, touch the small nut on the end of the solenoid. If the metallic object is not attracted to the nut, check the fuse and wiring for an open circuit. If the object is attracted but no ñclickò is heard, replace the solenoid. 5b. Remove the four bolts holding the small block to the main block. Lift and remove small block being careful not to damage O-rings/filter. Clean filter and re-install. 5c. Remove large nut on side of large valve block. Remove spring, and use needle nose vise grip to pull spool from block. Check block and spool for contaminants and scratches.

©2015 Alamo Group Inc.

		Clean parts or replace if scratched.

TROUBLESHOOTING (CONTINUED)

SYMPTOMS	CAUSE	REMEDY
Motor runs but will not cut.	1. Belts	1. Inspect belts and pulleys. Replace belts and repair as needed.
	2. Tensioner	2. Adjust tensioner nut flatwasher washer is flush with top of guide.
Mower turns slowly or not at all.	1. Contaminants restricting spool movement in valve body.	1. Remove large nut on side of large valve block. Remove spring, and use needle nose vise grip to pull spool from block. Check block and spool for contaminants and scratches. Clean parts or replace if scratched.
	2. Suction lines obstructed	2. Check for kinks or obstruction in suction hose.
	3. Low oil level	3. Check hyd. tank level and fill.
Pump will not work	1. Excessive wear on internal parts	1. Disassemble and repair.
Motor will not work	1. Excessive wear on internal parts	1. Disassemble and repair.

NOTE: If flow meter is available, check pressure and flow volume for all suspected hydraulic problems.

If the solution to your problem cannot be found in this section, call the Technical Service representative at the number shown on the front cover of this manual.

©2015 Alamo Group Inc.

Torque for Standard Fasteners

Nominal Dia.	threads per inch	Grade 2			Grade 5			Grade 8			Grade 9		
		Tightening Torque			Tightening Torque			Tightening Torque			Tightening Torque		
		Lubed	Dry Plated	Dry plain	Lubed	Dry Plated	Dry plain	Lubed	Dry Plated	Dry plain	Lubed	Dry Plated	Dry plain
(in.)		K = 0.15	K = 0.17	K = 0.20	K = 0.15	K = 0.17	K = 0.20	K = 0.15	K = 0.17	K = 0.20	K = 0.15	K = 0.17	K = 0.20
Unified Coarse Thread Series													
1/4	20	49 in-lbs	59 in-lbs	66 in-lbs	76 in-lbs	86 in-lbs	101 in-lbs	107 in-lbs	122 in-lbs	143 in-lbs	126 in-lbs	143 in-lbs	168 in-lbs
5/16	18	101	122	135	157	178	209	221	251	295	259	294	346
3/8	16	15 ft-lbs	18 ft-lbs	20 ft-lbs	23 ft-lbs	26 ft-lbs	31 ft-lbs	33 ft-lbs	37 ft-lbs	44 ft-lbs	38 ft-lbs	43 ft-lbs	51 ft-lbs
7/16	14	24	29	32	37	42	49	52	59	70	61	70	82
1/2	13	37	44	49	57	64	75	80	90	106	94	106	125
9/16	12	53	63	70	82	92	109	115	130	154	135	153	180
5/8	11	73	87	97	113	128	150	159	180	212	186	211	248
3/4	10	129	155	172	200	227	267	282	320	376	331	375	441
7/8	9	125	150	167	322	365	429	455	515	606	533	604	710
1	8	187	225	250	483	547	644	681	772	909	799	905	1065
1 1/8	7	266	319	354	596	675	794	966	1095	1288	1132	1283	1510
1 1/4	7	375	450	500	840	952	1121	1363	1545	1817	1597	1810	2130
1 1/2	6	652	783	869	1462	1657	1950	2371	2688	3162	2779	3150	3706
Fine Thread Series													
1/4	28	56 in-lbs	68 in-lbs	75 in-lbs	87 in-lbs	99 in-lbs	116 in-lbs	123 in-lbs	139 in-lbs	164 in-lbs	144 in-lbs	163 in-lbs	192 in-lbs
5/16	24	112	135	150	174	197	231	245	278	327	287	325	383
3/8	24	17 ft-lbs	20 ft-lbs	23 ft-lbs	26 ft-lbs	30 ft-lbs	35 ft-lbs	37 ft-lbs	42 ft-lbs	49 ft-lbs	43 ft-lbs	49 ft-lbs	58 ft-lbs
7/16	20	27	32	36	41	47	55	58	66	78	68	78	91
1/2	20	41	49	55	64	72	85	90	102	120	105	120	141
9/16	18	59	71	78	91	103	121	128	146	171	151	171	201
5/8	18	82	99	110	127	144	170	180	204	240	211	239	281
3/4	16	144	173	192	223	253	297	315	357	420	369	418	492
7/8	14	138	165	184	355	403	474	502	568	669	588	666	784
1	14	210	252	280	542	614	722	765	867	1020	896	1016	1195
1 1/8	12	298	357	397	668	757	890	1083	1227	1444	1269	1439	1693
1 1/4	12	415	498	553	930	1055	1241	1509	1710	2012	1768	2004	2358
1 1/2	12	734	880	978	1645	1865	2194	2668	3024	3557	3127	3544	4169

Torque values for 1/4 and 5/16-in series are in inch-pounds. All other torque values are in foot-pounds.
Torque values calculated from formula T=KDF, where

K = 0.15 for "lubricated" conditions
K = 0.17 for zinc plated and dry conditions
K = 0.20 for plain and dry conditions

D = Nominal Diameter
F = Clamp Load

Torque-Tension Relationship for Metric Fasteners

Nominal Dia. (mm)	Pitch	Class 4.6 (4.6) Tightening Torque Lubed K = 0.15 (ft-lbs)	Class 4.6 Dry Plated K = 0.17 (ft-lbs)	Class 4.6 Dry plain K = 0.20 (ft-lbs)	Class 8.8 (8.8) Tightening Torque Lubed K = 0.15 (ft-lbs)	Class 8.8 Dry Plated K = 0.17 (ft-lbs)	Class 8.8 Dry plain K = 0.20 (ft-lbs)	Class 10.9 (10.9) Tightening Torque Lubed K = 0.15 (ft-lbs)	Class 10.9 Dry Plated K = 0.17 (ft-lbs)	Class 10.9 Dry plain K = 0.20 (ft-lbs)	Class 12.9 (12.9) Tightening Torque Lubed K = 0.15 (ft-lbs)	Class 12.9 Dry plain K = 0.20 (ft-lbs)
3	0.5	0.28	0.32	0.38	0.73	0.82	0.97	1.0	1.2	1.4	1.2	1.6
3.5	0.6	0.44	0.50	0.59	1.1	1.3	1.5	1.6	1.9	2.2	1.9	2.5
4	0.7	0.66	0.74	0.87	1.7	1.9	2.3	2.4	2.7	3.2	2.8	3.8
5	0.8	1.3	1.5	1.8	3.4	3.9	4.5	4.9	5.5	6.5	5.7	7.6
6	1	2.3	2.6	3.0	5.8	6.6	7.7	8.3	9.4	11	9.7	13
6	1.25	2.1	2.3	2.7	5.3	6.0	7.0	7.6	8.6	10	8.8	12
7	1	3.8	4.3	5.0	9.7	11	13	14	16	19	16	22
8	1	5.9	6.6	7.8	15	17	20	22	24	29	25	34
8	1.25	5.5	6.2	7.3	14	16	19	20	23	27	24	31
10	1.25	11	13	15	29	33	39	42	48	56	49	66
10	1.5	11	12	14	28	32	37	40	45	53	47	62
12	1.25	21	23	28	53	60	71	76	86	101	89	119
12	1.5	20	22	26	51	58	68	73	82	97	85	113
12	1.75	19	21	25	49	55	65	70	79	93	81	108
14	1.25	26	29	34	66	75	89	95	108	127	111	148
14	1.5	28	32	37	72	82	96	103	117	138	121	161
14	2	30	34	40	78	88	104	111	126	148	130	173
16	1.5	50	57	67	129	146	171	184	208	245	215	287
16	2	47	53	62	121	137	161	173	196	230	202	269
18	1.5	73	82	97	187	212	249	268	303	357	313	417
18	2.5	65	73	86	167	189	222	239	270	318	279	372
20	1.5	101	115	135	270	306	360	374	424	498	437	583
20	2.5	91	104	122	236	267	314	337	382	449	394	525

Clamp load calculated as 75% of the proof load for specified bolts.
All torque values are listed in foot-pounds
Torque values calculated from formula T=KDF, where

K = 0.15 for "lubricated" conditions
K = 0.17 for zinc plated, dry conditions
K = 0.20 for plain and dry conditions

D = Nominal Diameter
F = Clamp Load

©2015 Alamo Group Inc.

LUBRICATION RECOMMENDATIONS

Description	Application	General Specification	Recomended Mobil Lubricant
Tractor Hydraulics	Reservoir	JD-20C MF M1135,M1141 FNHM2C134D (FNH201)	Mobilfluid 424
Mower Hydraulics Cold Temperatures 0ÁF Start-Up	Reservoir	ISO 46 Anti-Wear-Low Temp	Mobil DTE 15M
Normal Temperatures 10ÁF Start-Up		JD-20C MF M1135,M1141 FNH M2C134D(FNH201)	Mobilfluid 424
Normal Temperatures 15ÁF Start Up		ISO 46 Anti-Wear	Mobil DTE 25
High Operating Temp. Above 90ÁF		ISO 100 Anti-Wear	Mobil DTE 18M
Flail Rear Gearbox	Grease	PAO Synthetic Extreme Pressure Gear Lube	Mobil SHC 75W-90 Mobil 1 Synthetic Gear
Cutter Shaft & Ground Roller Shaft(Flail)	Grease Gun	Lithium-Complex Extreme Pressure NLGI-ISO 320	Mobilgrease CM-S
Drive Shaft Coupler (Flail and Rotary)	Grease Gun	Lithium-Complex Extreme Pressure NLGI2-ISO 320	Mobilgrease CM-S
Drive Shaft Yoke, U-joint & Stub Shaft	Grease Gun	Lithium-Complex Extreme Pressure NLGI2-ISO 320	Mobilgrease CM-S
Boom Swivel Boom Cylinder Pivots (Rotary & Flail Boom)	Grease Gun	Lithium Complex Extreme pressure NLGI2-ISO 320	Mobilgrease CM-S
Deck Boom Pivot & Deck Stop Adjustment Rotary & Flail)	Grease Gun	Lithium Complex Extreme Pressure NLGI-ISO 320	Mobilgrease CM-S
Deck Spindle(Rotary)	Grease Gun	Tiger Spindle Lubricant part number 06540000	Mobilith SHC 220

©2015 Alamo Group Inc.

POLYCARBONATE CARE AND MAINTENANCE

The proprietry UV and Abrasion Resistant Surface coating on SHIELDS SUPERCOATED polycarbonate significantly improves performance. Periodic cleaning using proper procedures and compatible cleaners are recommended to prolong service life. Tiger Corp. polycarbonate is SUPERCOATED on both sides.

CLEANING THE SUPERCOAT HARD-COAT

1. Wash with a mild solution of soap or detergent and lukewarm water.
2. Using a soft cloth or sponge, gently wash the sheet to loosen dirt and grime and rinse well with clean water.
3. To prevent water spotting, thoroughly dry with chamois or cellulose sponge.
4. Avoid the use of abrasive cleaners, squeegees and/or other cleaning implements that may mar or gouge the coating.

CLEANING AGENTS WHICH HAVE BEEN FOUND TO BE COMPATIBLE UNDER LABORATORY CONDITIONS:

Aqueous Solutions of Soaps and Detergents

Windex(1)	Top Job(2)	Joy(2)	Mr Clean(2)
Fantastik(3)	Formula 409(4)	Sumalight D12	Brucodecid
Organic Solvents			
Butyl Cellosolve	Kerosene	Hexel, F.O. 554	Naphtha(VM&P grade)
Neleco-Placer	Turco 5042		
Alcohols			
Methanol	Isopropyl		

All residual organic solvents should be removed with a secondary rinse.

GRAFFITI REMOVAL

Butyl cellosolve (for removal of paints, marking pen inks, lipstick, etc.) The use of masking tape, adhesive tape or lint removal tools work well for lifting off old weathered paints.

To remove labels, stickers, etc., the use of kerosene or VM&P naphtha is generally effective. When the solvent will not penetrate sticker material, apply heat (hair dryer) to soften the adhesive and promote removal.

IMPORTANT: If a material is found to be incompatible in a short-term test, it will usually be found to be incompatible in the field. The converse, however, is not always true. Favorable performance is no guarantee that actual end-use conditions have been duplicated. Therefore, these results should be used as a guide only and it isrecommended that the user test the products under actual end-use conditions.

©2015 Alamo Group Inc.

RECOMMENDED FILLING INSTRUCTIONS FOR HYDRAULIC RESERVIORS

When filling or checking the oil level, the unit should be parked on a level surface., shut OFF, and allow sufficient time to cool to ambient temperature. Use caution when removing the pressurized breather. Do not place face o ver opening when removing breather.

If your reserv ior has two sight glasses: The reservior should be filled to the top of the lower sight glass on the side of the tank. Do not overfill. The reservoir has been overfilled when oil is visible in the upper sight glass. If tank has too much oil, the excess may be expelled through the pressurized breather.

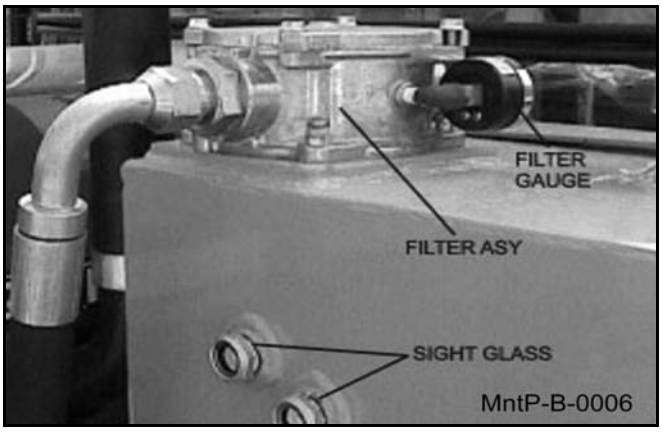

If your reservior has one sight glass/temperature gage: The reservior should be filled to the center of the sight glass on the side of the tank. Do not over-fill. If the t ank has too much oil, the excess may be expelled through the pressurized breather.

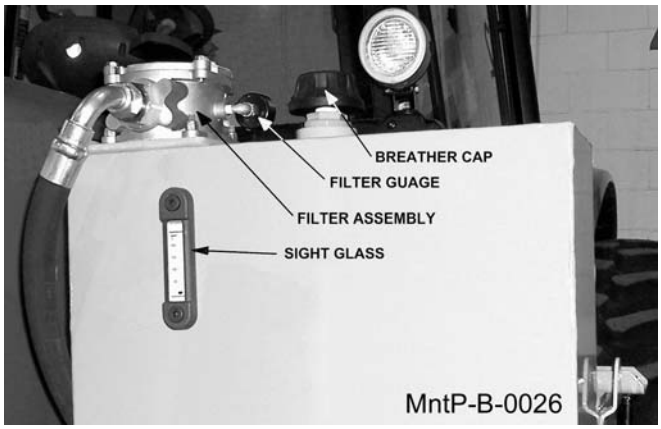

DETAILED MAINTENANCE

REPLACING IN-TANK HYDRAULIC FILTER:

Loosen the four bolts on the top cover of the filter housing. Turn cover counter-clockwise until cover is free. Remove and replace filter. Replace top cover and cover bolts in opposite order as removed.

©2015 Alamo Group Inc.

DETAILED MAINTENANCE

REPLACING HIGH PRESSURE HYDRAULIC FILTER ELEMENT:

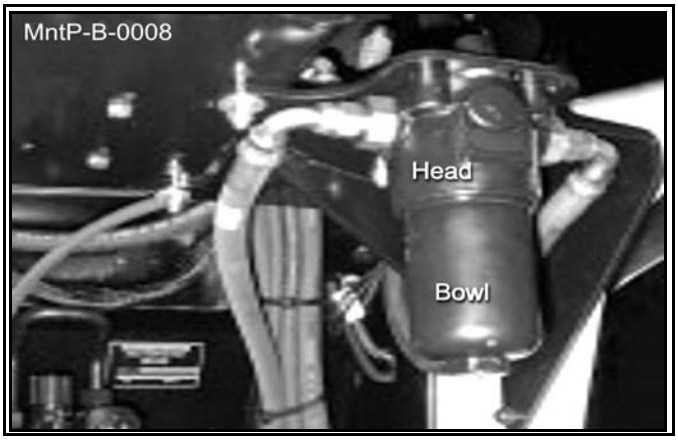

Ensure that the system has been shut down and de-pressurized. Locate High Pressure Filter housing. Confirm that the element that is about to be installed matches the element p/n on the filter model tag. *Example: V3.0510-06 (world line 100, HD049 model)* Locate the bottom of the High Pressure Bowl. Using the appropiate spanner wrench or ratchet, turn in a counterc lockwise rotation, (looking at the bottom of the bowl) to remove the bowl from the head. The first couple of rotations will seem tight as the o-ring p asses the sealing flats. Once the o- ring has cleared the sealing flats the bowl should spin freely. Taking care not to drop the bowl, finish removing the bowl from the head. **WARNING: bowl will be full of oil!**

Pour the oil from the bowl into a container. This oil should be considered contaminated because the flow direction through the element is outside-in. Clean the inside of the bowl if ñdirtò is present. Remove the old element from the filter head by pulling with a rotation motion. Dispose of the used element properly. Remove the new element from the packaging. Using your finger, dab and lubricate the o-ring in the top of the new element with oil. In stall the new element into and on the mounting boss within the head. Ensure that the element is fully seated on the boss. Clean and inspect the o-ring that is affixed in the bowl and lubricate with oil. Using a clockwise rotation, screw the bowl back into the head, ensuring that the bowl has not been cross threaded into the head. Continue to tighten the bowl into the head, using the spanner wrench or ratchet. The rotation of the bowl will become tighter once the o-ring engages the sealing flats. Once the bowl has bottomed out, back-off the bowl by 1/6 turn. This ensures that the o-ring is seated properly with in the sealing flats. Element change out and re-assembly is now complete. Start the machine and inspect the filter area, checking that there is no oil leaking from the filter assembly. Replace the filter element first at 50 hours of operation, then yearly (500 hours) or when indicated by restriction indicator.

GREASING CUTTERSHAFT -- FLAIL MOWERS

Locate grease zerks on each end of cuttershaft(s), these are located on th e bearing cover. Normal conditions require one or two pumps in each bearing, using Lithium-Complex Extreme Pressure grease confirming to NLGI2-ISO 320 specifications. This is to be done with a standard grease gun daily or at **8 hour intervals. CAUTION: Over greasing may cause premature seal failure.**

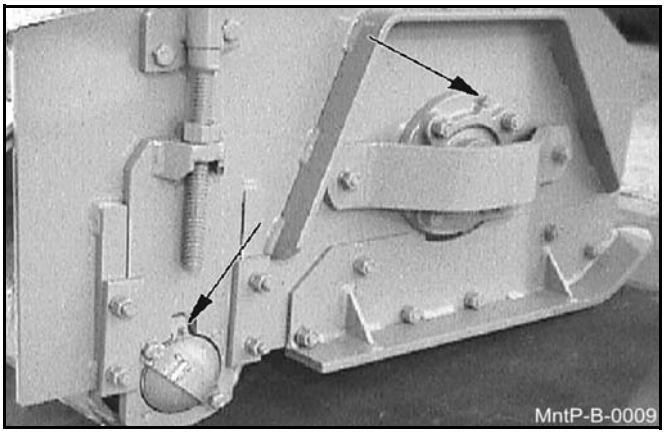

©2015 Alamo Group Inc.

GREASING GROUND ROLLER SHAFT-- FLAIL

Locate grease zerks on eack end of roller tube at lower end of head. Normal conditions require one or two pumps in each bearing, using Lithium-Complex Extreme Pressure grease conforming to NLGI2-ISO 320 specifications. This is to be done with a standard grease gun daily or at **8 hour intervals. CAUTION: Over greasing may cause premature seal failure**.

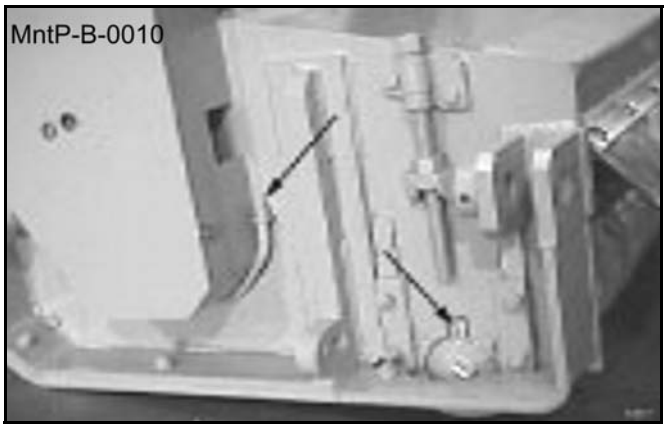

ADJUSTING/CHECKING BELT TENSION

To adjust belt tension or replace belts on flail cutter head, remove four bolts that secure the belt cover and remove cover. The hex nuts shown below can be adjusted to increase/decrease the belt tension as needed. (NOTE: Location of adjustment nuts may vary on flail cutter heads.) **Be sure to replace the belt cover BEFORE operating mower!**

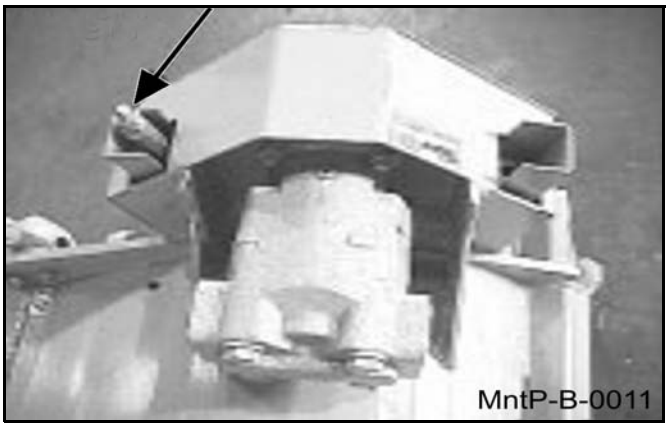

TIGHTENING KNIFE BOLTS AND DISK BOLTS:

After every 8 hours of operation or daily, the Knife Bolts and disk bolts should be tightened as follows:

Knife mounting bolts torque to 800 lubricated ft. lbs.

Disk mounting bolts (6ea.) torque to 204 dry or 180 lubricated ft. lbs.

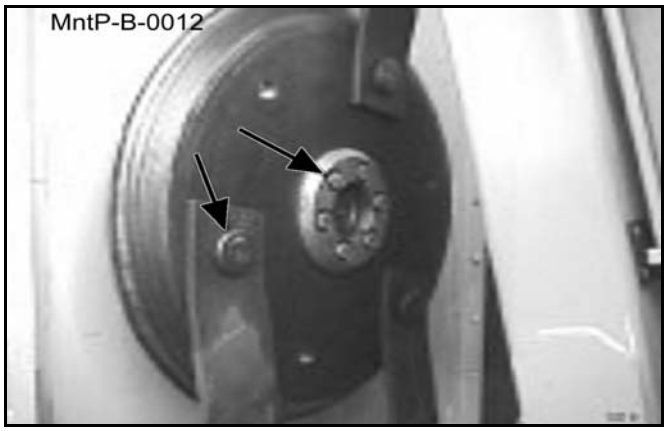

©2015 Alamo Group Inc.

GREASING POINTS ON BOOM AND PIVOT

Locate grease zerks on deck pivot ssembly, on the deck end of secondary boom, at main/secondary boom joint, and at swivel end of main boom. Inject Lithium-Complex Extreme Pressure grease conforming to NLGI2 -ISO 320 specifications until grease begins to protrude from ends.

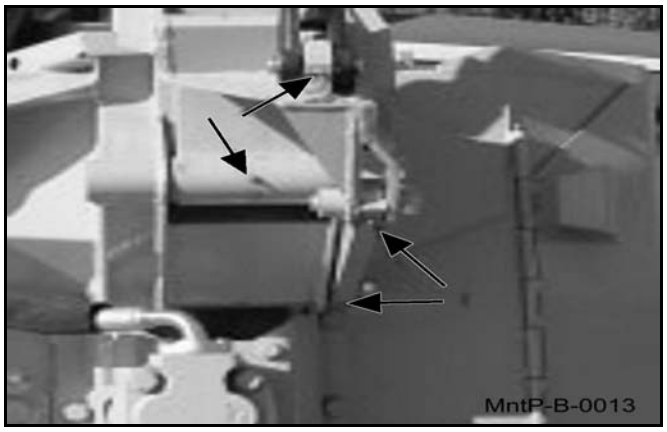

DECK STOP ADJUSTMENT

On boom flail, loosen locking nut. Turn adjustment bolt in, and run deck cylinder out to full extension. Adjust bolt out until the head just touches the boom, and tighten lock nut. **NOTE: Bolt should not hit boom before cylinder reaches full travel.**

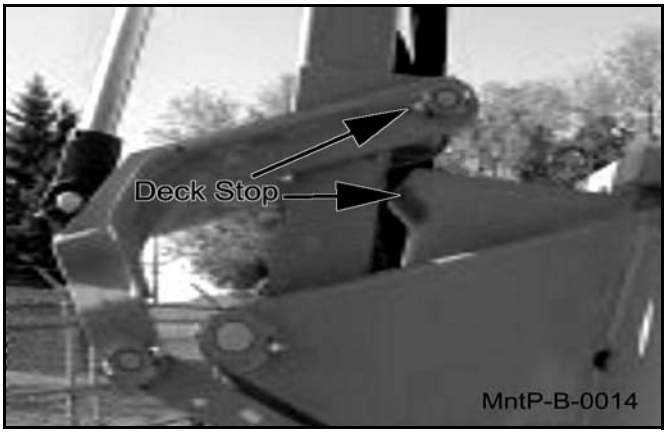

GREASING SPINDLE

Locate grease fitting on inside of deck housing. Inject Tiger Spindle Lubricant, part number 06540000 into spindle housing. Fill with lubricant until lubricant weeps out of top spindle seal. Lubricate spindle weekly or every 40 hours of use.

©2015 Alamo Group Inc.

TIGHTENING SPINDLE BOLTS

The spindle mounting bolts should be checked and retorqued daily or every 8 hours of service. Torque the (6) bolts shown below to 357 dry or 315 ft. lbs. lubricated.

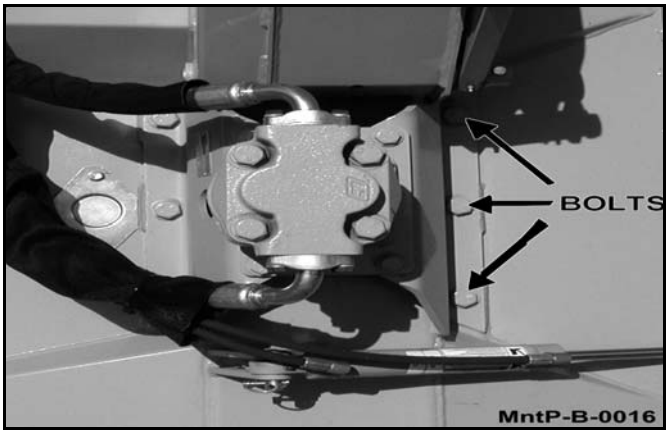

GREASING PUMP DRIVE SHAFT COUPLER

With engine stopped, ensure driveshaft alignment by grasping coupler and sliding back and forth. Coupler should slide freely with approximately 1/8ò of end play. If coupler does not slide freely, inspect for loose pump mount bolts, or damaged or loose crankshaft adapter. Inject Lithium-Complex Extreme Pressure grease conforming to NLGI2-ISO 320 specifications into coupler until grease begins to protrude from ends. Grease daily or every 8 hours. Do not over grease.

©2015 Alamo Group Inc.

DRIVESHAFT YOKE, U-JOINT STUB SHAFT

WIth engine stopped, inject Lithium-Complex extreme pressure grease conforming to NLGI2-ISO 320 specifications into universal joints and slip yoke until grease appears at the seal. Grease them daily or every 8 hours.

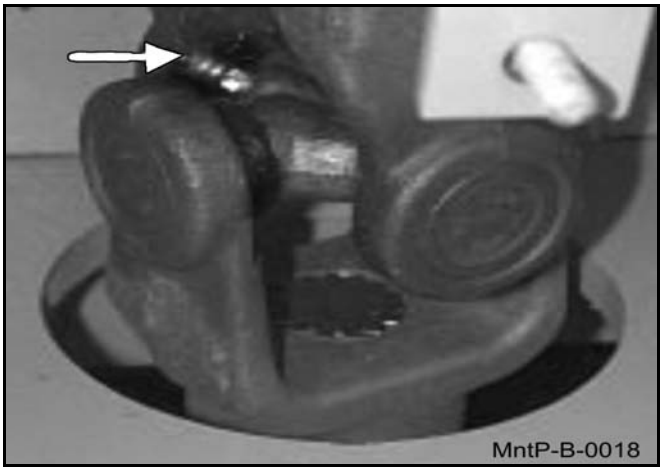

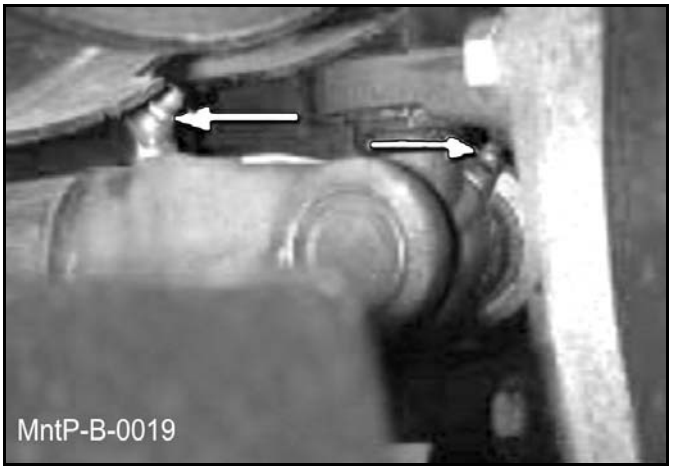

GREASING THE BOOM SWIVEL

Locate the zerks on the main swivel boss (if applicable), main boom pivot boss (if ap plicable) and on both ends of th e boom swivel cyl inder. Inject Lithium-Complex Extreme Pressure grease conforming to NLGI2-ISO 320 specification until grease begins to protrude from ends.

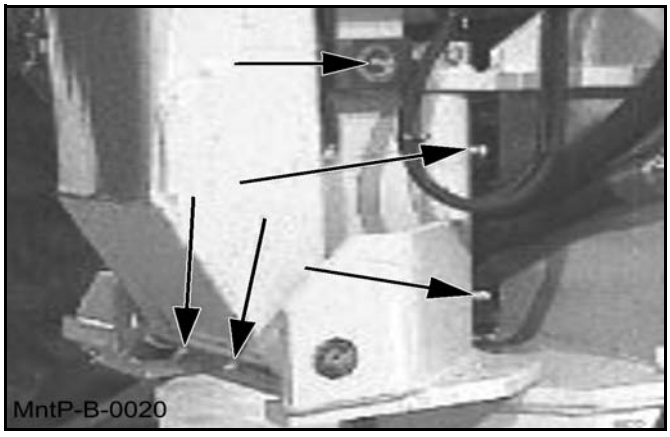

©2015 Alamo Group Inc.

GREASING BOOM CYLINDER(S) PIVOT POINTS

Locate the zerk on the butt end tang of cylinder and on rod end tang. Inject Lithium-Complex Extreme Pressure grease conforming to NLGI2-ISO 320 specifications until grease begins to protrude from ends. This procedure is to be used on the main boom cylinder, secondary boom cylinder, deck pivot, and swivel cylinders daily or at 8 hour intervals.

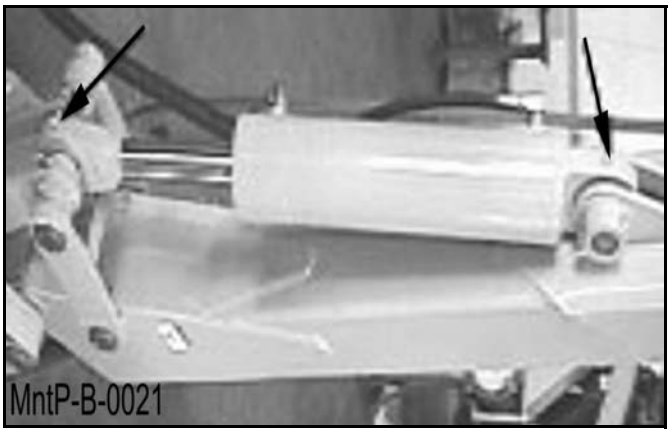

BALL VALVES

The ball valve at the hydraulic reservoir may need to be closed during certain maintenance or repair procedures. **THE BALL VALVES MUST BE OPEN (handle parallel with valve) WHEN TRACTOR IS RE-STARTED OR PUMP IS COUPLED TO MOTOR OR PTO!** Failure to do so will result in component failure!

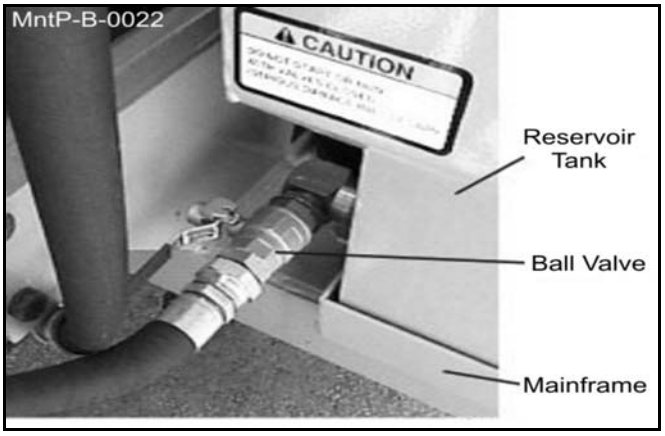

©2015 Alamo Group Inc.

Blades

Check the Blades for cracks and wear and Blade Bolts for tightness, daily. Blades should be replaced when they are worn excessively, bent, deformed, or out of balance.

⚠ CAUTION Blades should always be replaced in pairs. Blades of different weights can cause serious imbalance and damage to the machine and personnel. When replacing blades, take care to replace the blade bolts, nuts, and washers.

Important Make sure the mower blades are turning clockwise when looking down from the top of the mower. Follow the color coding on the hydraulic hoses and fittings to make sure the motor and hydaulics hoses are assembled properly. Connect the red hose connection only to red fitting. Connect the blue hose connection only to the blue fitting. The blade rotation on the leading edge of the mower should discharge the cut material away from the tractor and operator.

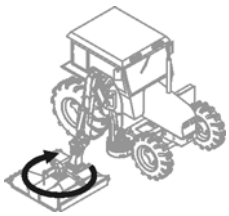

⚠WARNING If the leading edge of the mower blades are rotating backwards they can discharge material toward the operator. If this occurs discontinue mowing immediately and reverse the direction of the motor rotation by correctly installing the motor pressure and return hoses. Contact your dealer or Alamo Industrial for specific information on the hose routing.

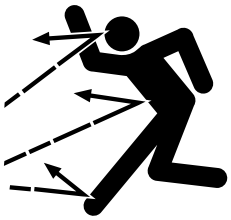

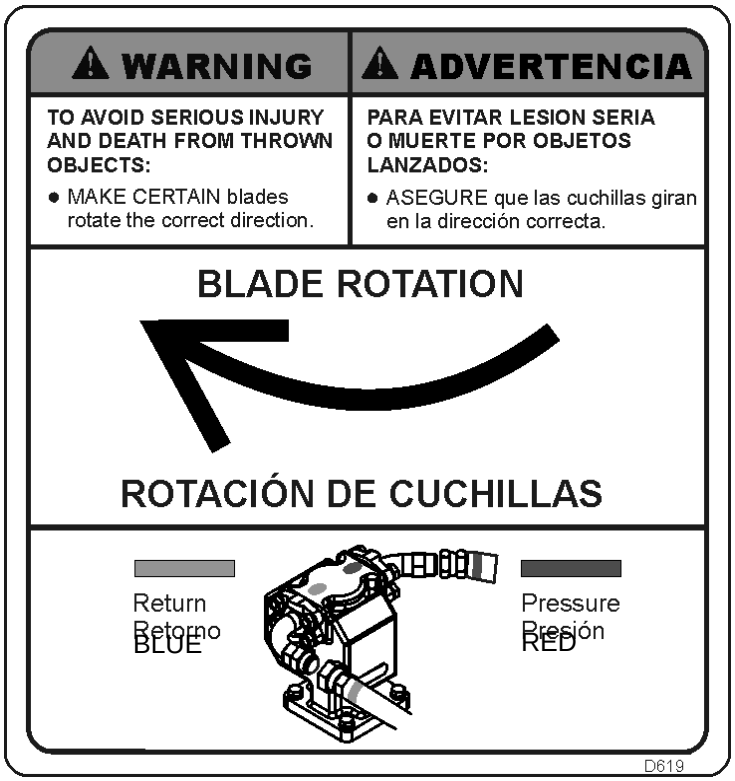

©2015 Alamo Group Inc.

ROTARY KNIFE REPLACEMENT

1. Be sure you have a complete matching set of new knives for replacement.
2. Remove knives and inspect holes for damage. Also watch for cracks in the disk (if applicable) around the holes.
3. Lube threads with anti-seize. Install bolts through knife and disk from bottom side of disk/blade bar. Install new self-locking nuts and torque them to 800 ft. lbs.
4. The knives should swing freely to absorb shocks from impact when striking objects.

WARNING **WHEN CUTTING HEAVY BRUSH, KNIFE BOLTS SHOULD BE INSPECTED HOURLY AND RETORQUED TO 800 LUBRICATED FT. LBS.**

REPLACEMENT OF ROTARY DISK/BLADE BAR

CAUTION **Failure to follow the following warnings and instructions may result in serious injury or damage to the equipment or property!**

1. The bolts that attach the disk to the spindle must be grade 8. These 5/8 inch bolts are to be torqued to 204 dry or 184 ft. lbs lubricated with Loctite 271.
2. A thread locking agent may be applied to threads of all mounting bolts before they are installed.
3. **Disks must be inspected daily for hairline cracks between spindle mounting bolts or around the knife mounting bolts. These cracks indicate metal fatigue caused by severe abuse. If cracks are present the disk must be replaced.**
4. Inspect the disk mounting bolts daily when checking tightness of knife mounting bolts. If a disk mounting bolt is loose, it must be removed, threads cleaned, fresh thread locking agent applied, and tightened to proper torque value.
5. If a knife mounting bolt is loose, the self locking nut must be replaced as a safety precaution. Lubricate threads with anti-seize. Install bolts through knife and disk/blade bar from bottom side. Install self locking nuts and torque them to 800 ft. lbs.

©2015 Alamo Group Inc.

Flail Blades Inspection

⚠ DANGER Inspect the Blades daily for abnormal wear. REPLACE ALL BLADES on the carrier IMMEDIATELY if any blades have:

- Become bent or deformed from its original shape, or
- Wear inside the blade bolt hole, or
- Any cracks are visible, or
- Deep gouges in the blade's surface are present, or
- Gouges or chipped areas in the cutting edge are larger than 1/4" (8mm), or
- The material on the leading edge has been worn away by more than 1/4" (8mm)

DO NOT straighten, sharpen, weld or hard-face blades

Failure to replace worn or damaged blades may lead to catastrophic failure of the blades and ejection of the broken part with tremendous force which may cause serious bodily injury or death.

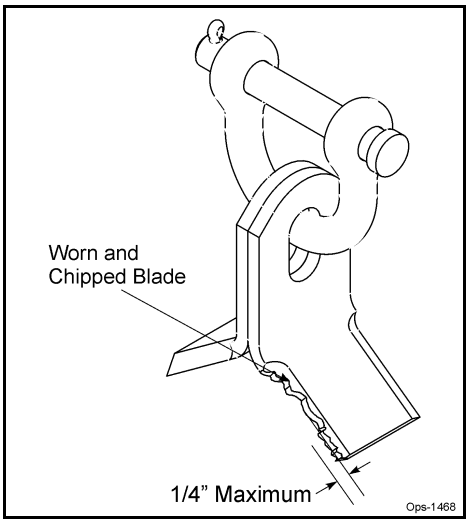

Always replace blades in sets

- Blades that are damaged may indicate severe service or abuse. If one blade is worn or damaged other blades on the same shaft will have been subjected to the same severe service or abuse.
- The Flail rotor turns at speeds exceeding 2000 RPM and is dynamically balanced at the factory. Differences in blade weight between used blades with loss of material from gouges or wear as compared to new blades can cause severe vibration and damage to the Flail rotor. Always replace blades as complete sets.

©2015 Alamo Group Inc.

Blade Pins and D-Ring Inspection

Inspect Blade Pins and D-Rings daily for wear or damage as follows:

⚠ DANGER Inspect the Blade pins and D-Rings daily for abnormal wear. Make sure the cotter pins are in place and properly spread. REPLACE BLADE Pins and D-Rings IMMEDIATELY if they have:

- Visible cracks or
- If a Pin or D-Ring has visible worn areas, or
- If a Pin or D-Ring has gouges or chipped areas

Failure to replace abnormally worn pins or D-Rings may lead to catastrophic failure and ejection of the broken part, which may cause serious bodily injury or death.

Always replace the pins and D-Rings whenever excessive wear is noticed.

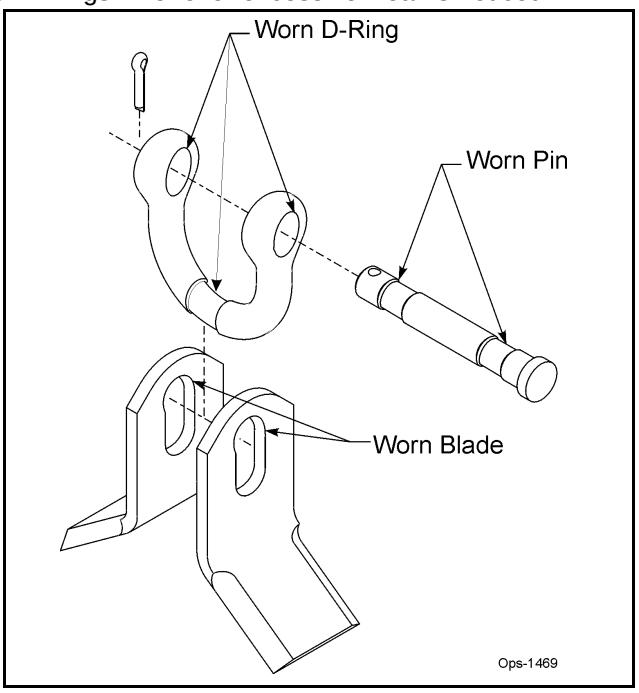

Important If the cotter pins are broken by contact with other flail blades, remove the pin and reverse the direction the pin is inserted through the D-Ring so that the cotter pin is on the opposite side of the D-Ring. This will prevent the next set of blades from swinging back and hitting the cotter pin. ***OPS-U-0045***

©2015 Alamo Group Inc.

Flail Axe Blades Inspection

DANGER Inspect the Blades daily for ab normal wear. REPLACE ALL BLADES on the carrier IMMEDIATELY if any blades have:

- Become bent or deformed from its original shape, or
- Oval shape wear inside the blade bolt hole, or
- Any cracks are visible, or
- Deep gouges in the blade's surface are present, or
- Gouges or chipped areas in the cutting edge are larger than 1/4" (8mm), or
- The material on the leading edge has been worn away by more than 1/4" (8mm)

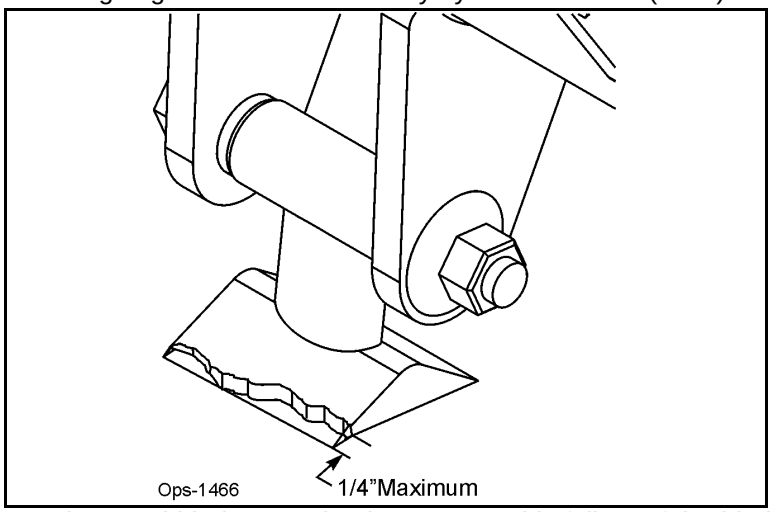

Failure to replace worn or damaged blades may lead to catastrophic failure of the blades and ejection of the broken part with tremendous force which may cause serious bodily injury or death.

Always replace blades in sets

- Blades that are damaged may indicate severe service or abuse. If one blade is worn or damaged other blades on the same shaft will have been subjected to the same severe service or abuse.
- The Flail Axe rotor turns at speeds exceeding 2000 RPM and is dynamically balanced at the factory. Differences in blade weight between used blades with loss of material from gouges or wear, as compared to new blades, can cause severe vibration and damage to the Flail Axe rotor. Always replace blades as complete sets.

Important Use only genuine Alamo Industrial replacement blades, blade bolts and fasteners. Other blades and bolts may not meet the requirements of Alamo Industrial and may fail during operation, resulting in the part failing and being thrown out from under the mower.

CAUTION Never attempt to sharpen blades. ***OPS-U-0042***

©2015 Alamo Group Inc.

Flail Axe Blade Bolt Inspection

Inspect Blade Bolts daily for wear or damage as follows:

⚠ DANGER Inspect the Blade Bolt daily for abnormal wear. REPLACE ALL BLADE BOLTS on the carrier IMMEDIATELY if any bolts have:

- Visible cracks or
- If the blade bolt is worn or any recessed area is visible on the bolt, or
- If Blade Bolt has gouges or chipped areas. or
- If Bushing fits loose in the Rotor Shaft.

Failure to replace abnormally worn bolts or bushings may lead to catastrophic failure of the blades and ejection of the broken part, which may cause serious bodily injury or death.

Always replace Blade Bolts with new bolts and new bushings whenever replacing the Blades. To tighten bolts and nuts, first apply thread lock to nut. Make sure to tighten bolts and nuts just enough to allow the blades to swing freely and not bend the cuttershaft lugs. If cuttershaft lugs are bent together because of over tightening the blades will not swing freely. *OPS-U-0043*

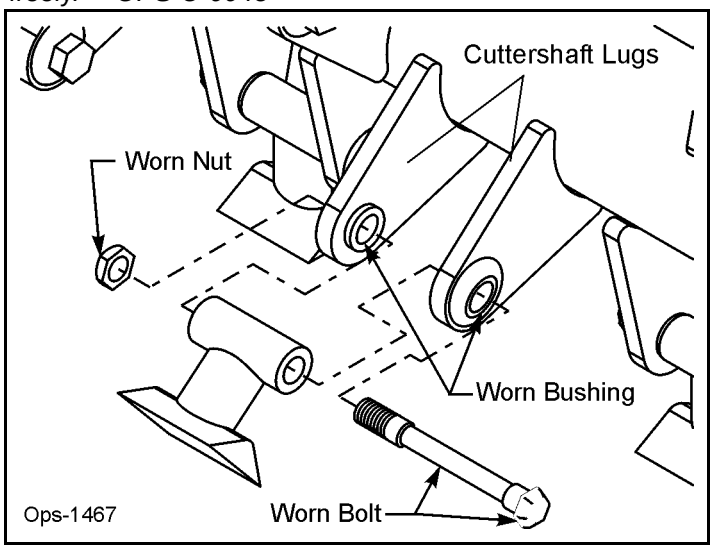

©2015 Alamo Group Inc.

50” FLAIL KNIFE BLADE REPLACEMENT (Light Brush Grass)

1. If knives are damaged or badly worn, they will need to be replaced as a set. Replacing a single knife can cause severe knife can cause severe vibration and possible damage to the mower. The knife should not be welded on for any reason.
2. Always replace the knife bolts when replacing the knives. DO NOT REUSE THE KNIFE BOLTS OR NUTS.
3. Assemble knives, bushings, bolts and nuts as shown in Parts Section of the manual.
4. Install the locking hex nut so that the flat face of the nut is towards the knife.
5. Apply Loctite 271 or equivalent to threads.
6. Torque nut to 50 ft. lbs. Knife must swing freely.

WARNING DO NOT re-use the locking hex nuts for mounting the knives. If hex nut becomes loose, or required removal for knife replacement or any other reason, they must be discarded and replaced with new nuts.

50” FLAIL KNIFE BLADE REPLACEMENT (Medium Brush Grass)

7. If knives are damaged or badly worn, they will need to be replaced as a set. Replacing a single knife can cause severe knife can cause severe vibration and possible damage to the mower. The knife should not be welded on for any reason.
8. Always replace the knife bolts when replacing the knives. DO NOT REUSE THE KNIFE BOLTS OR NUTS.
9. Assemble knives, bushings, bolts and nuts as shown in Parts Section of the manual.
10. Install the locking hex nut so that the flat face of the nut is towards the knife.
11. Apply Loctite 271 or equivalent to threads.
12. Torque nut to 120 ft. lbs. Knife must swing freely.

WARNING DO NOT re-use the locking hex nuts for mounting the knives. If hex nut becomes loose, or required removal for knife replacement or any other reason, they must be discarded and replaced with new nuts.

50” FLAIL KNIFE BLADE REPLACEMENT (Heavy Duty Brush)

13. If knives are damaged or badly worn, they will need to be replaced as a set. Replacing a single knife can cause severe knife can cause severe vibration and possible damage to the mower. The knife should not be welded on for any reason.
14. Always replace the knife bolts when replacing the knives. DO NOT REUSE THE KNIFE BOLTS OR NUTS.
15. Assemble knives, bushings, bolts and nuts as shown in Parts Section of the manual.
16. Install the locking hex nut so that the flat face of the nut is towards the knife.
17. Apply Loctite 271 or equivalent to threads.
18. Torque nut to 176 ft. lbs. Knife must swing freely.

WARNING DO NOT re-use the locking hex nuts for mounting the knives. If hex nut becomes loose, or required removal for knife replacement or any other reason, they must be discarded and replaced with new nuts.

©2015 Alamo Group Inc.

63” BOOM FLAIL KNIFE REPLACEMENT

1. If knives are damaged or badly worn, they will need to be replaced as a set. Replacing a single knife can cause severe vibration and possible damage to the mower.
2. Assemble knives, clevis, bolts and nuts as shown in part section of manual.
3. Install locking hex nut so that the flat face of nut is towards the knife.
4. Apply Loctite 271 or equivalent to threads.
5. Torque nut to 35 FT. LBS. Knife must swing freely.

WARNING

DO NOT re-use the locking hex nuts for mounting the knives. If hex nut become loose, or require removal for knife replacement or any other reason, they must be discarded and replaced with new nuts.

WARNING

Knives should not be welded on for any reason.

HEAVY DUTY SPINDLE ASSEMBLY INSTALLATION AND BEARING ADJUSTMENT

WARNING! A press MUST be used to install bearing cups, bearing cones, and seals. DO NOT use a hammer to install races, bearings, or seals. The parts of assembly may be damaged.

NOTE: The grease zerk and gussets are located on the top side of the spindle housing. Be sure the spindle is assembled correctly.

Be sure to wear eye protection and other protective equipment as needed when working on spindle assembly.

©2015 Alamo Group Inc.

THE SPINDLE ASSEMBLY

See the diagram below for identification of spindle parts, while servicing.

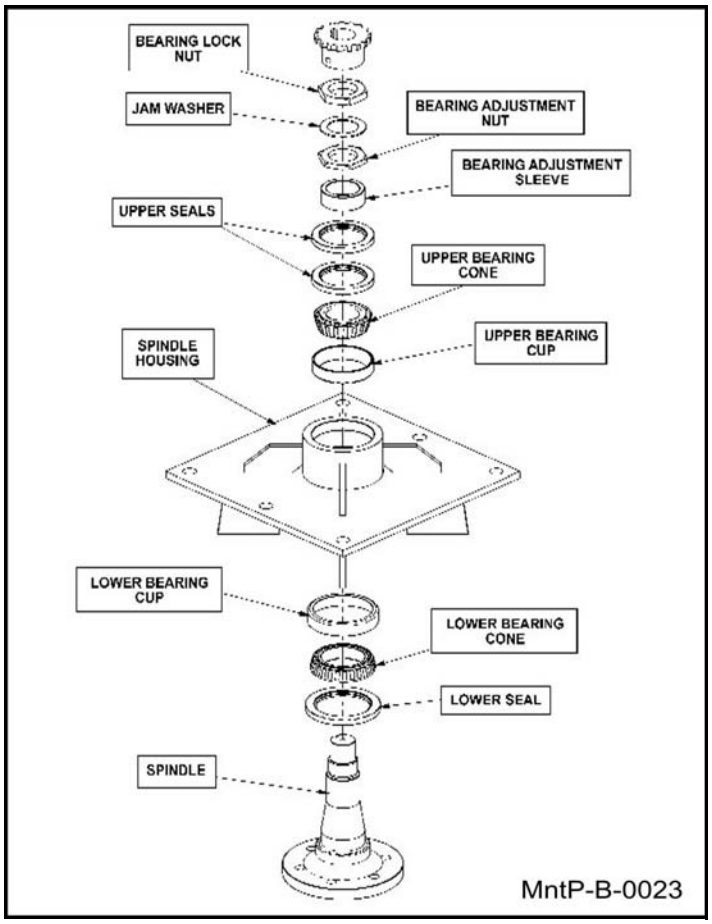

©2015 Alamo Group Inc.

BEARING INSTALLATION

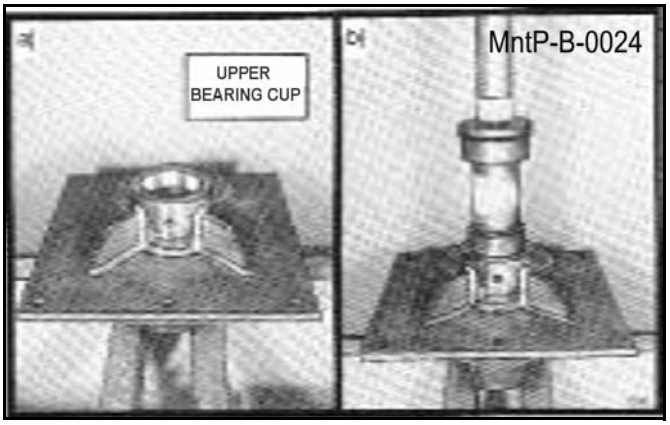

1. Press upper bearing cup in to the spindle housing.
2. Turn the spindle housing over and press in the lower bearing cup.
3. Place the lower bearing cone in the bearing cup. Next press t he seal into the s pindle housing. The inner lip of the seal must be DOWN, towards the bearing, so lubricant is sealed inside the housing.
4. Install the spindle in the housing. Lightly press the spindle to seat the cone onto the spindle.
5. Support the bottom of the spindle and press the upper bearing cone and bearing adjustment sleeve onto the spindle.
6. **NOTE: The spindle housing must turn freely when seating the bearing cone and sleeve.**
7. Press the two upper seals into the spindle housing. The inner lip of the seals must be UP, away from the bearing, so excess lubricant can escape.
8. Install the b earing adjustment nut (thin nut) so there is 1-1/6ò clearance between the n ut and the sleeve. Install the jam washer, placing the tab into the key-way. Install the bearing lock nut (thin nut) and hand tighten against jam washer and adjustment nut. See the following section for bearing adjustment.
9. Position the spindle housing horizontally with the drain hole oriented ñupò Gre ase through the zerk with Tiger Spindle Lubricant (part number 06540000) until the grease purges from the drain hole.
10. Install the plug into the drain hole.

BEARING ADJUSTMENT

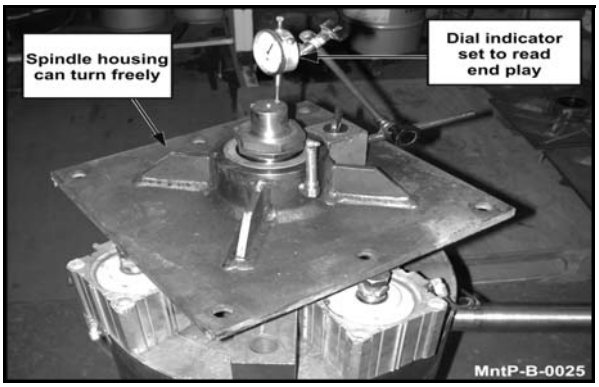

1. Clamp the bottom end of the spindle securely in a v ise so the spindle hous ing turns freely.
2. Position a magnetic base dial indicator on the outer diameter of the spindle housing. Locate the end of the dial indicator against the flat end of th e spindle shaft. The dial indicator will now measure ac curately bearing end play.
3. Tighten the bearing adjustment nut until there is .012 inch mov ement when the spindle housing is pried upward away from the vise jaws.
4. When there is .012 inch free play between the spindle and housing, install the bearing lock nut (thick nut). Hold the adjusting nut securely and tighten the lock nut to 300 ft. lbs. of torque.
5. After the lock nut is tightened, there must be .001 inch to .003 inch of free play when lightly prying up on the spindle housing.

If the end play is cor rect, .001 inch to .003 inch, be nd tabs up on jam washer to prevent the lock nut from loosening.

If the end play is NOT correct, loosen the lock nut and turn the adjustment nut as required and re-tighten the lock nut. Repeat first part of step 5.

©2015 Alamo Group Inc.

Boom Cylinder Removal and Replacement Instructions

1. Clear the area of all personnel before lowering the boom mower head.
2. From the tractor seat with your seat belt fastened around you, lower the boom mower head to the ground. Extend the boom to the furthest reach and lower the mower head flat on the ground. DO NOT attempt to replace the cylinders with the boom in the raised or transport position.
3. Shut off the tractor, engage the parking brake, place the tractor transmission in the park position, and remove the key before dismounting.
4. Allow the system to cool to room temperature before removing any hydraulic components
5. Wear safety glasses and impenetrable gloves when working with hydraulic hoses and fittings.
6. Release all oil pressure from the hydraulic circuit by manually stroking each valve section with the tractor engine off. Utilize the manual override function if the unit is equipped with an electric over hydraulic valve.
7. Utilize blocks, jack stands or a suitable over head hoist to support the weight of the boom section and remove pressure form the cylinder mounting pins.
8. Check to see that the cylinder to be replaced is not under pressure by moving the cylinder pins by hand. The pins should be loose and should slide from the pin bore easily. If the pins are tight and cannot be moved, the cylinder may be under pressure. Make sure the boom components are properly supported and that the pressure is relived from the circuit.
9. Cylinder assemblies are heavy and can fall when the pins are removed. Support the hydraulic cylinder with a suitable hoist or jack.
10. Slowly loosen the hydraulic connections to the cylinder. Carefully unscrew hose fitting and allow any remaining pressure to bleed off. **Use extreme care.** Oil must be cool, and the technician should stand to the side to prevent exposure to any hydraulic oil. Always consult the Material Safety Data Sheet and wear any required Personal Protective Equipment. A catch pan may be required to retain any spilled oil.
11. Cap both ends of the fitting with suitably sized metal caps.
12. Remove the cylinder pins starting with the ROD end cylinder pin. Make sure the cylinder is properly supported, and remove the base end cylinder pin. The cylinder may be heavy-- use proper lifting techniques to lift and handle the cylinder. If needed, get assistance from another person to safely lift the cylinder from the machine.
13. Measure the distance between the cylinder pin holes and extend the new cylinder the correct length prior to attempting an installation.
14. Install the new cylinder in place and install both cylinder pins and retaining hardware.
15. Remove the metal caps and re-install the hydraulic hoses.
16. Check the hydraulic reservoir of the boom mower to ensure there is sufficient oil. Follow the manufactures recommendations for proper oil type and filtering techniques and requirements to add oil to the system.
17. Clear the area of all persons prior to starting the tractor.
18. Consult the Operator's Manual for instructions in regard to the proper operating procedure.
19. From the tractor seat, with the seat belt fastened, operate the boom to ensure proper operation of the boom function.
20. From the tractor seat, with the seat belt fastened, operate the boom controls to fully extend and retract the new cylinder several times to purge any trapped air from the system.
21. From the tractor seat, with the seat belt fastened, look for signs of an oil leak. If an oil leak is observed, shut the tractor down and follow the steps to remove pressure from the hydraulic circuit. Identify the source of the leak and resolve the issue.
22. Upon completion of the required repairs return to Step # 16 to recheck the cylinder for proper operation.

©2015 Alamo Group Inc.

CUTTERSHAFT BEARING REPLACEMENT

1. Remove existing cuttershaft, bearings and string guards.
2. Make sure that the end knives on each end of the cuttershaft are oriented as shown.
3. Apply anti-seize on cuttershaft as shown on next page.
4. Install non-drive side bearing first.
5. Install the top of the string guard on the non-drive side first. Use Loctite 271 or equvalent and torque (95 ft-lb or 104ft-lb if you use an extension).
6. Install the bearing and top string guard on the drive side.
7. Center the cuttershaft between the string guards. Use Loctite 271 or equivalent and torque (95ft-lb or 104ft-lb if you use an extension) the top string guard on the drive side.
8. Install, use Loctite 271 or equivalent, and torque (95ft-lb or 104ft-lb if you use an extension) the bottom string guard on both sides.
9. Make sure the cuttershaft is centered. On the non-drive side, tighten one set screw in the bearing onto the cuttershaft.
10. Remove the other set screw and drill a 5/16ò hole into the cuttershaft 3/16ò deep through the hole in the bearing. BE CAREFUL NOT TO DAMAGE THE THREADS IN THE BEARING HOLE.
11. Replace the set screw in the bearing, use Loctite 271 or equivalent, and tighten onto the cuttershaft through the new hole.
12. Remove the other set screw and repeat the drilling procedure (Step 10). Replace the set screw as stated in Step 11.
13. Repeat steps 9 through 12 on the drive side.
14. Grease both bearings properly.

See illustration on next page

©2015 Alamo Group Inc.

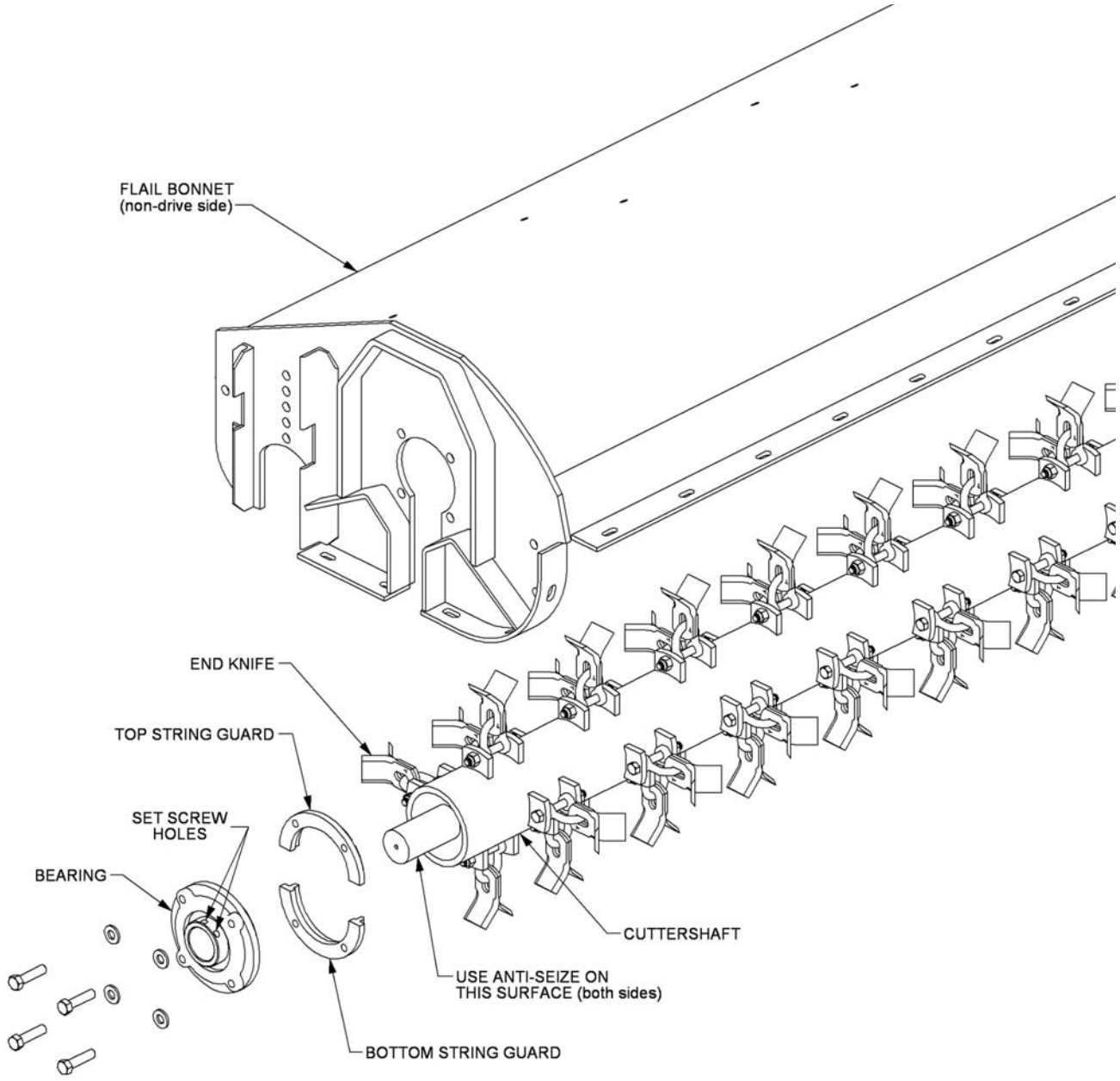

©2015 Alamo Group Inc.

DAILY MAINTENANCE SCHEDULE

The following services should be performed daily or every 8 hours of service, following the detailed maintenance instructions in the operatorôs manual.

_____ Pump driveshaft: If required with drive shaft/coupler check for end play and lubricate at zerks.

_____ Crankshaft adapter: If equipped with rubber grommets check condition, replace if missing or damaged.

_____ Pivot points: Inject grease until it appears at ends.

_____ Hydraulic fittings: Check for leaks with paper or cardboard. Tighten fittings or replace hoses immediately.

_____ Knives: Inspect for missing or damaged knives, change (only complete sets) as needed.

_____ Belts: Check/tighten/replace belts as needed.

_____ Mainframe/deck: Unless otherwise specified retorque bolts according to torque specifications in this section.

_____ Hydraulic fluid level: Add, if required, per fluid recommendations.

_____ Rear flail drive, bearing flange and shaft couplers: Grease as instructed in the detailed maintenance section.

_____ Cuttershaft and ground roller: Grease as instructed in the detailed maintenance section.

Service performed by:_____ Date:____/____/____ Hour

Meter:_____

Maintenance Section

**This page may be copied and used as part of the daily maintenance routine.

©2015 Alamo Group Inc.

©2015 Alamo Group Inc.

PARTS SECTION

PART NAME INDEX

PARTS ORDERING GUIDE 3
TRACTOR MOUNT KIT 4
TRACTOR MOUNT KIT - HYDRAULICS 6
ELECTRONIC PROPORTIONAL LIFT VALVE MOUNT 8
JOYSTICK AND SWITCHBOX MOUNT 10
CABLE (MANUAL) LIFT VALVE - 5 SPOOL 12
5 SPOOL CABLE CONTROL MOUNT 14
NOTES 15
BOOM MOUNT KIT 16
OPEN STOW BOOMREST 18
POLYCARBONATE SAFETY WINDOW 20
NOTES 1 21
AXLE STABILIZER - VERSION ONE 22
AXLE STABILIZER - VERSION TWO 24
WHEEL SPACER 26
WHEEL WEIGHT 27
WHEEL WEIGHT - BAR AXLE 28

©2017 Alamo Group Inc.

The following instructions are offered to help eliminate needless delay and error in processing purchase orders for the equipment in this manual.

1. The Parts Section is prepared in logical sequence and grouping of parts that belong to the basic machine featured in this manual. Part Numbers and Descriptions are given to help locate the parts and quantities required.

2. The Purchase Order must indicate the **Name and Address** of the person or organization ordering the parts, **who should be charged**, and if possible, the **serial number of the machine** for which the parts are being ordered.

3. The purchase order must clearly list the **quantity of each part**, the complete and correct **part number**, and the basic **name of the part**.

4. The manufacturer reserves the right to substitute parts where applicable.

5. Some parts may be unlisted items which are special production items not normally stocked and are subject to special handling. Request a quotation for such parts before sending a purchase order.

6. The manufacturer reserves the right to change prices without prior notice.

NOTE: When ordering replacement decals, refer to the part numbers and descriptions listed in the safety section in the front of this manual.

1000

For maximum safety and to guarantee optimum product reliability, always use genuine **Tiger** replacement parts. The use of inferior replacement parts may cause premature or catastrophic failure which could result in serious injury or death.

Direct any questions regarding parts to:

Tiger Corporation
3301 N. Louise Ave.
Sioux Falls, SD 57107
1-800-843-6849
1-605-336-7900

©2017 Alamo Group Inc.

TRACTOR MOUNT KIT

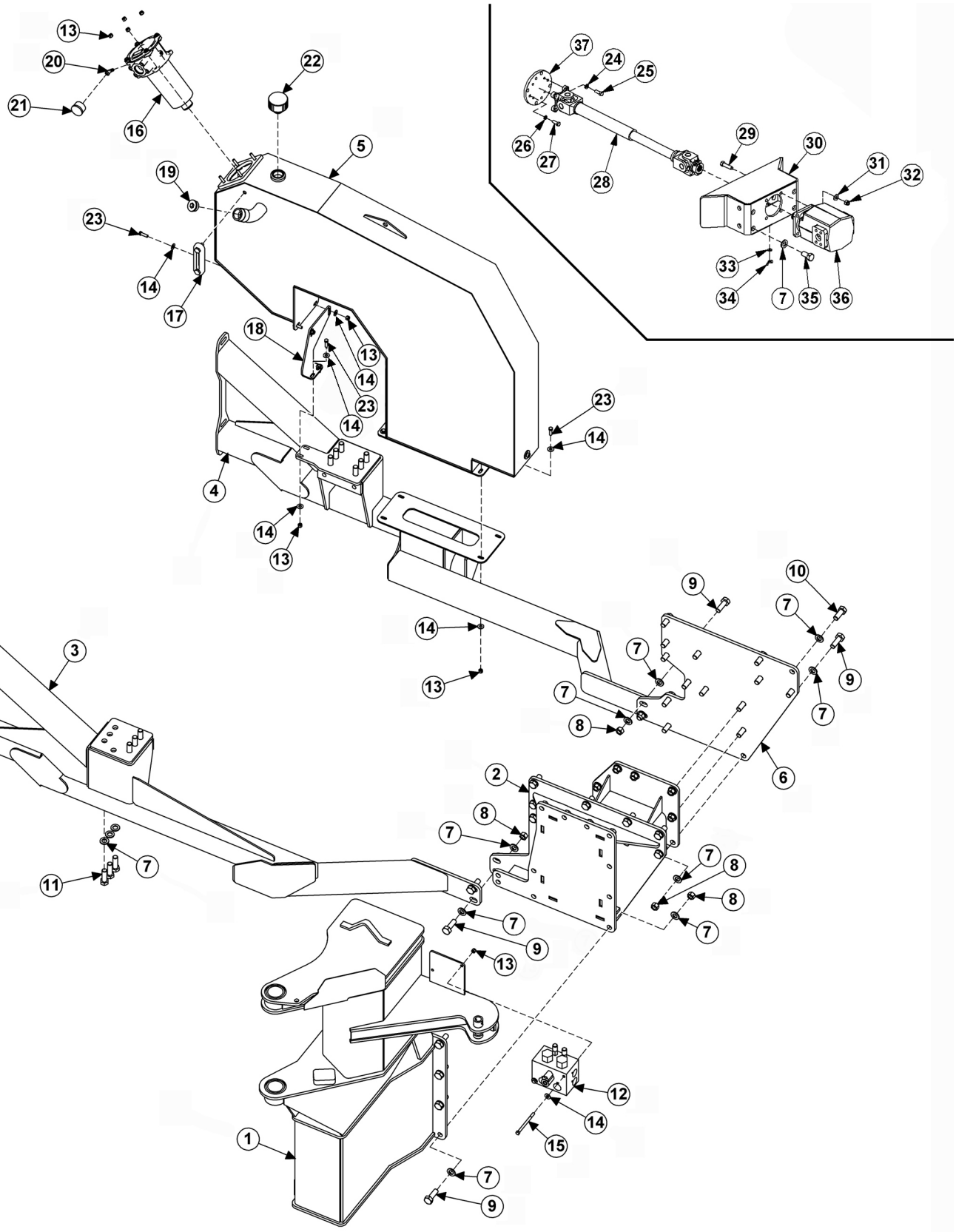

JD6145-55M-R BENGAL

TRACTOR MOUNT KIT

Continued...

ITEM	PART NO.	QTY.	DESCRIPTION
1	06300348	1	MAINFRAME, TB, JD6145-55M/R T4F
2	06300344	1	MAINFRAME MNT, JD6145-55M/R
3	06300345	1	AXLE BRACE, RH, JD6145M
---	06300356	1	AXLE BRACE, RH, JD6155M, JD6145-55R
4	06300346	1	AXLE BRACE, LH, JD6145M
---	06300357	1	AXLE BRACE, LH, JD6155M, JD6145-55R
5	06380084	1	TANK, RES, JD6M, T4F
6	06402240	1	UPRIGHT, LH, JD6150R
7	33880	68	FLATWASHER, 3/4" GR8, SAE
8	21825	20	HEX NUT, 3/4" NC
9	21833	20	CAPSCREW, 3/4" X 2-1/4" NC
10	31731	16	CAPSCREW, 20MM X 50MM (2.5 PITCH)
11	27281	12	CAPSCREW, 20MM X 60MM (2.5 PITCH)
12	06510083	1	VALVE, BRAKE, SOL, 3000PSI
13	21627	14	NYLOCK NUT, 3/8" NC
14	22016	18	FLATWASHER, 3/8" GR8
15	21644	2	CAPSCREW, 3/8" X 5" NC
16	06505044	1	FILTER ASSY, IN-TANK, CPLT, SAE 10
17	06505067	1	SIGHT GAUGE
18	06412418	1	SUPPORT, TANK, JD6145M
---	06411929	1	SUPPORT, TANK, JD6155M, JD6145-55R
19	06505127	1	PLUG, SAE #20
20	TF4888	1	STREET ELBOW, 1/8"
21	6T0649	1	FILTER GAUGE
22	06505077	1	CAP, BREATHER, 1-5/8MB
23	21631	8	CAPSCREW, 3/8" X 1-1/4" NC, GR8
24	21989	4	LOCKWASHER, 7/16"
25	21680	4	CAPSCREW, 7/16" X 1-1/4" NC
26	32691	4	LOCKWASHER, 10MM
27	23113	4	CAPSCREW, 10MM X 30MM, 1.5P
28	34999	1	DRIVESHAFT, U-JOINT
29	21733	4	CAPSCREW, 1/2" X 2" NC
30	34993	1	PUMP MOUNT
31	06533004	4	FLATWASHER, 1/2" SAE
32	21727	4	NYLOCK NUT, 1/2" NC
33	22014	1	FLATWASHER, 1/4"
34	32519	1	WING NUT, 1/4"
35	24860	4	CAPSCREW, 20MM X 40MM 2.5P
36	23152	1	PUMP
37	34998	1	SPACER, DRIVESHAFT

©2017 Alamo Group Inc.

TRACTOR MOUNT KIT - HYDRAULICS

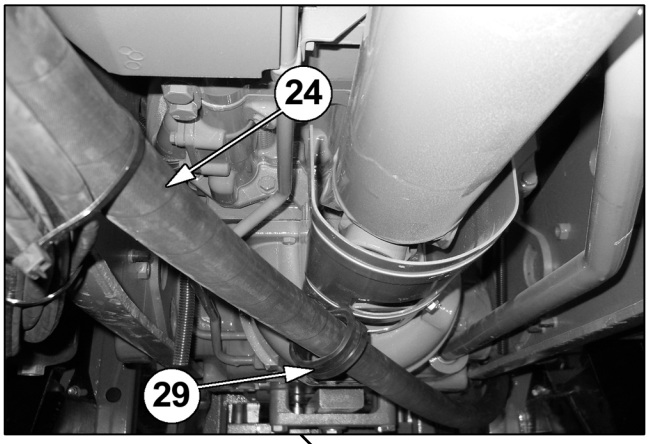

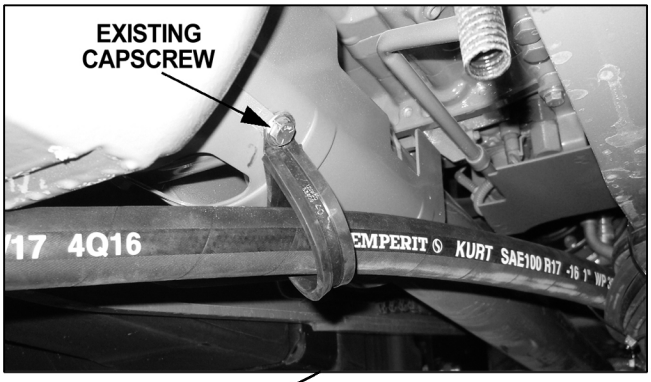

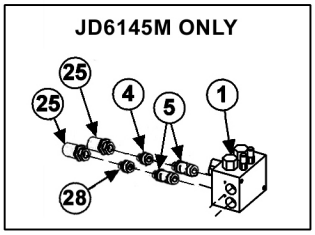

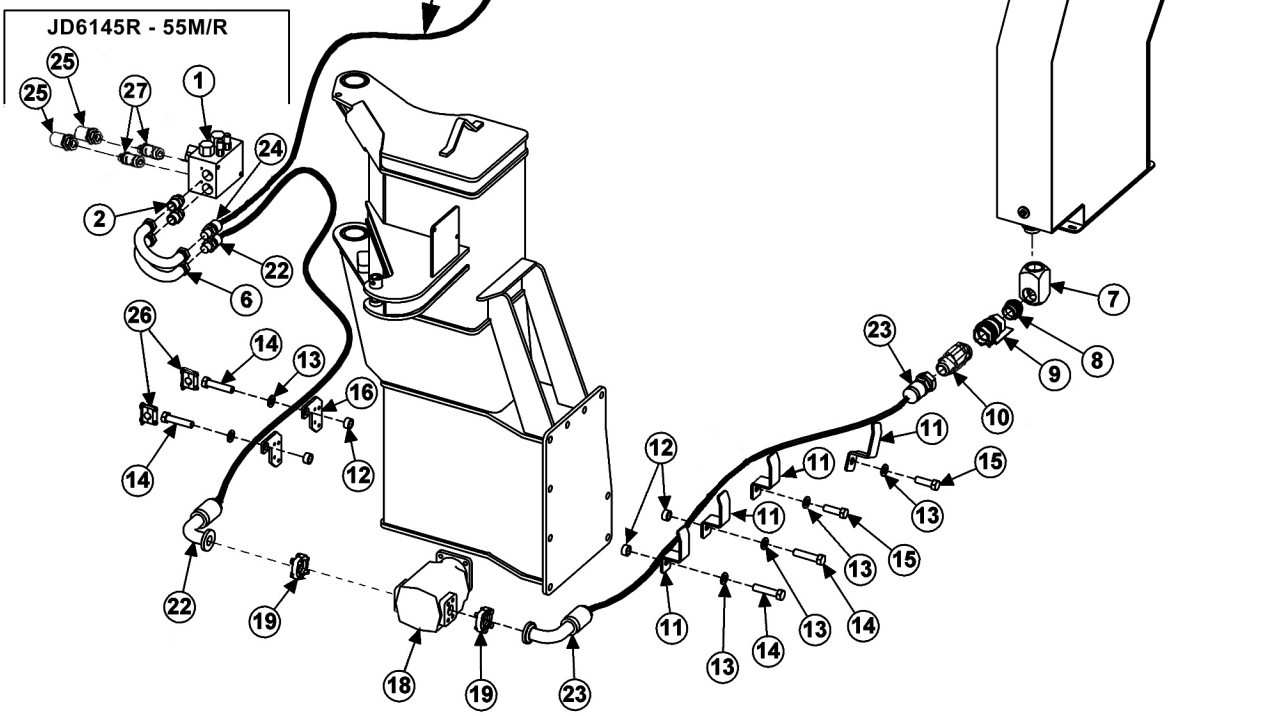

JD6145-55M-R BENGAL

TRACTOR MOUNT KIT - HYDRAULICS

Continued...

ITEM	PART NO.	QTY.	DESCRIPTION
1	06510084	1	BRAKE VALVE
2	33555	2	ADAPTER, 1MB X 1MJ
3	06503200	2	ELBOW, 16MJ X 16FJX, BT90
4	06503028	1	QUICK COUPLER 1" SAE, MALE, FLAT
5	06503027	1	QUICK COUPLER, 1" SAE, FEM, FLAT
6	06506012	2	PREFORMED TUBES
7	06503084	1	ELBOW, 1-1/2FOR X 1-1/2FOR
8	06503083	1	ADAPTER, 1-1/2ORB X 1-1/2ORB
9	34309	1	BALL VALVE, 1-1/2"
10	34394	1	ELBOW, 1-1/2" ORB X 1-1/2"MJ 45°
11	32382	4	BRACKET, HOSE
12	24849	4	SPACER
13	33880	6	FLATWASHER, 3/4" GR8, SAE
14	30708	4	CAPSCREW, 20MM X 90MM (2.5 PITCH)
15	21834	2	CAPSCREW, 3/4" X 2-1/2" NC
16	34626	2	CLAMP BRACKET
17	34064	1	ADAPTER, 1-1/4MOR X 1 MJ
18	23152	1	PUMP, P350-1-3/4 GEAR
19	TF4852	2	FLANGE KIT #20
22	06500827	1	HOSE, 1" X 97"
23	06500701	1	HOSE, 1-1/2" X 126
24	06500960	1	HOSE, 1" X 203"
25	33546	2	HOSE, 1" X 94"
26	34076	1	CLAMP KIT
27	32869	2	NIPPLE, MALE, LONG 1MOR X 1MJ
28	06503074	2	UNION, 1ORB X 1ORB
29	06520536	1	CLAMP, HOSE, 2-1/2" INS

©2017 Alamo Group Inc.

ELECTRONIC PROPORTIONAL LIFT VALVE MOUNT

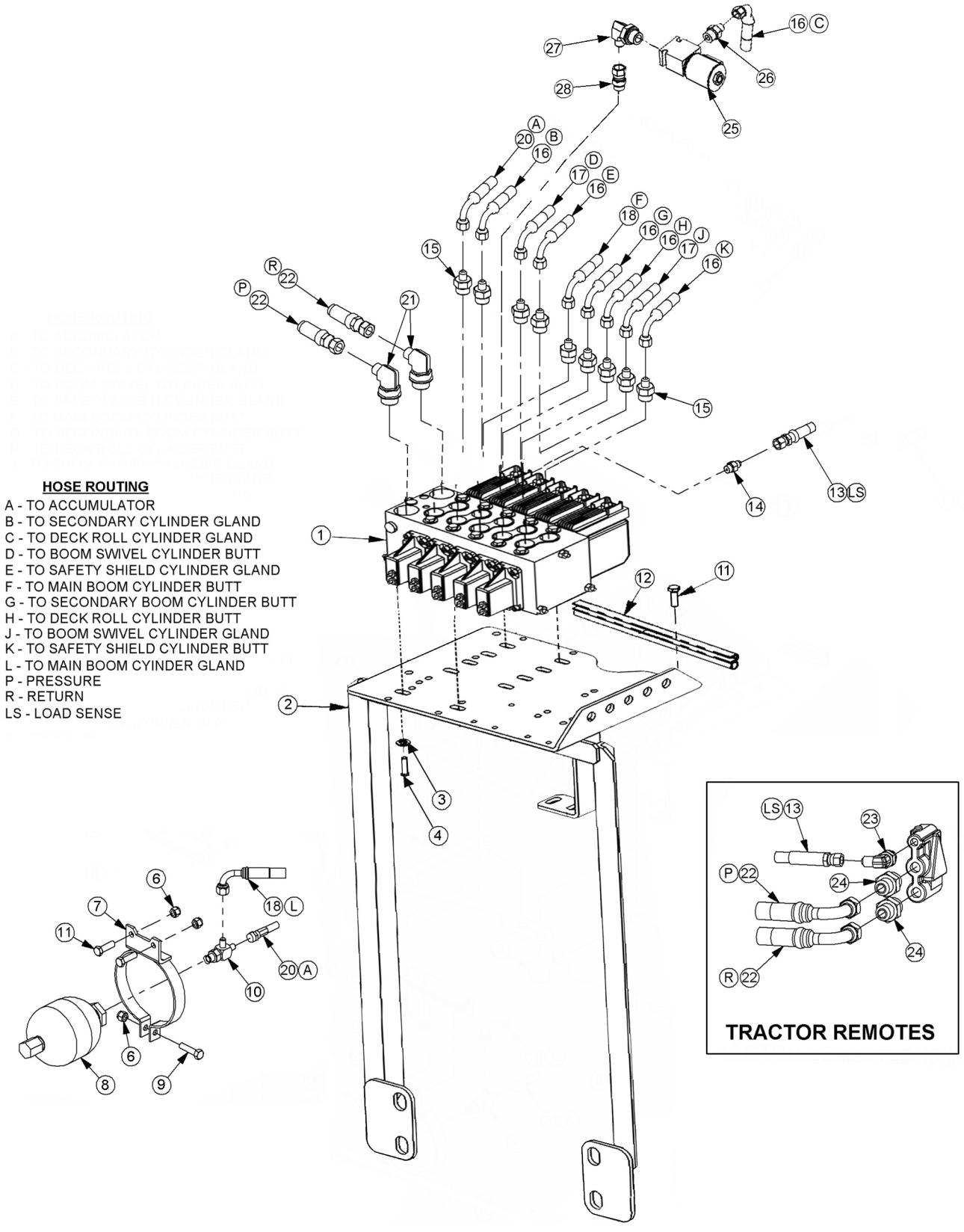

JD6145-55M-R BENGAL

ELECTRONIC PROPORTIONAL LIFT VALVE MOUNT

Continued...

ITEM	PART NO.	QTY.	DESCRIPTION
1	06502097	1	ELECTRONIC LIFT VALVE
2	06340048	1	PLATE,VALVE, JD6XXXR
3	21987	4	LOCKWASHER,5/16"
4	21579	4	CAPSCREW,5/16" X 3/4",NC
6	21627	5	NYLOCK NUT,3/8",NC
7	23888	1	BRKT,ACCUMULATOR
8	24300	1	ACCUMULATOR
9	21632	1	CAPSCREW,3/8" X 1-1/2",NC
10	06503029	1	TEE,RUN
11	21631	4	CAPSCREW,3/8" X 1-1/4",NC
13	06500400	1	HOSE,1/4" X 30"
14	33392	1	ADAPTER
15	32807	9	ADAPTER
16	06500914	6	HOSE,1/4" X 282"
17	06500697	2	HOSE,1/4" X 210"
18	06500915	2	HOSE,1/4" X 296"
20	33744	1	HOSE,1/4" X 34"
21	33294	2	ELBOW
22	06500171	2	HOSE,1/2" X 36"
23	06503013	1	ELBOW,14MM MOR X 5/16"MJ
24	33463	2	ADAPTER,22MM MOR X 1/2"MJ
25	06510050	1	TRAVEL LOCK, METRIPACK COIL
26	33271	1	ADAPTER, 1/2" MOR X 3/8" MJ
27	33382	1	ELBOW, 1/2" MB X 1/2" MJ
28	06503041	1	ADAPTER, 5/8" ORB X 1/2" FJX

©2017 Alamo Group Inc.

JOYSTICK AND SWITCHBOX MOUNT

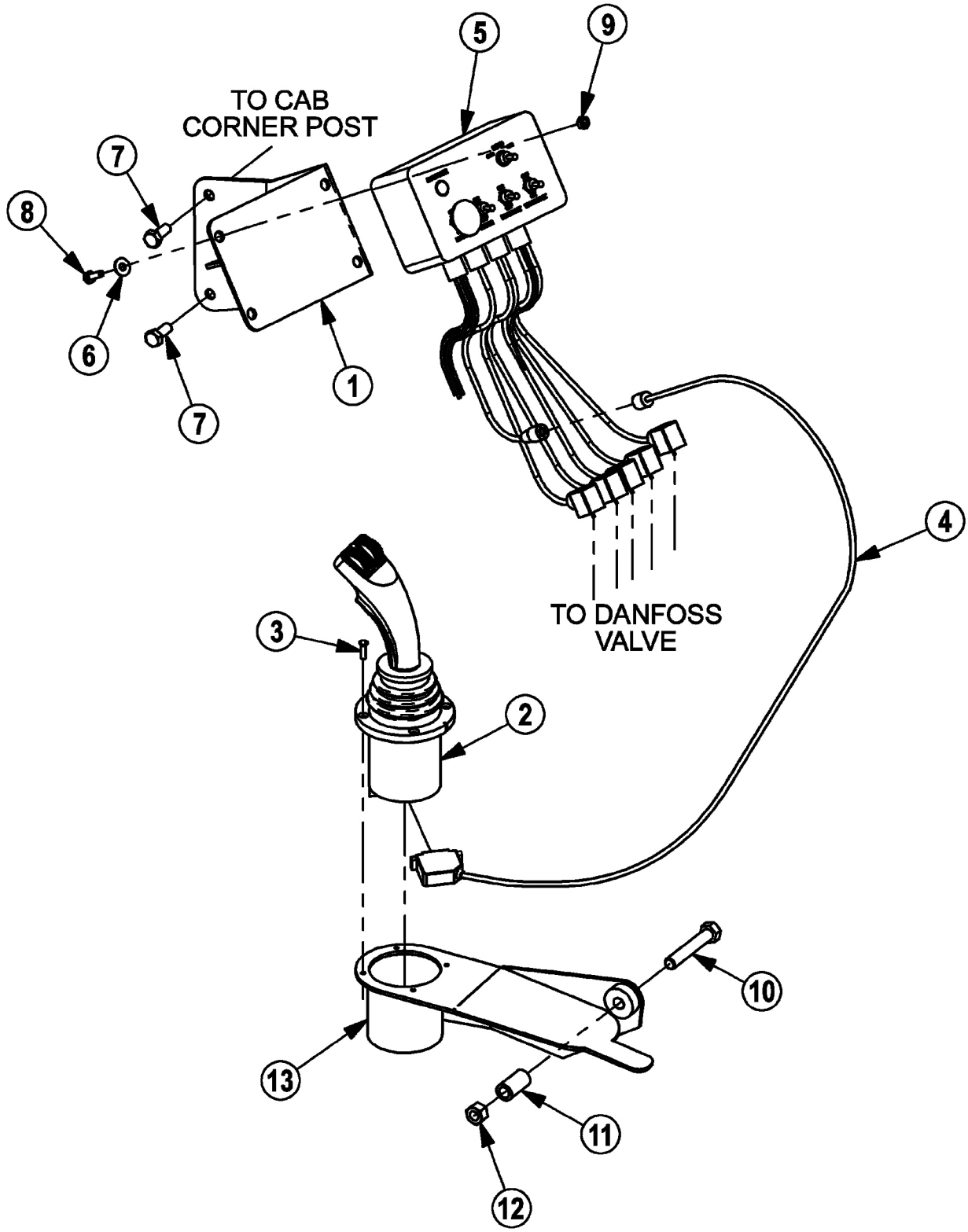

JD6145-55M-R BENGAL

JOYSTICK AND SWITCHBOX MOUNT

Continued...

ITEM	PART NO.	QTY.	DESCRIPTION
1	33355	1	MNT,BRKT,SWITCH BOX
2	06510046	1	JOYST,4AXIS,RH,DF
3	32829	4	SCREW,MACHINE,10-32 X 3/4",FLTHD
4	33693	1	CBL,EXT,4FT,JOYST
5	06510195	1	SWITCH BOX
6	22014	4	FLATWASHER, 1/4"
7	27513	2	CAPSCREW, 10MMX25MM (1.5 PITCH)
8	21529	4	CAPSCREW, 1/4" X 3/4" NC
9	21527	4	NYLOCK NUT, 1/4" NC
10	21737	1	CAPSCREW,1/2" X 3",NC
11	33359	1	TUBE,SPACER
12	21727	1	NYLOCK NUT,1/2",NC
13	33356	1	ARMREST,JOYSTICK

©2017 Alamo Group Inc.

CABLE (MANUAL) LIFT VALVE - 5 SPOOL

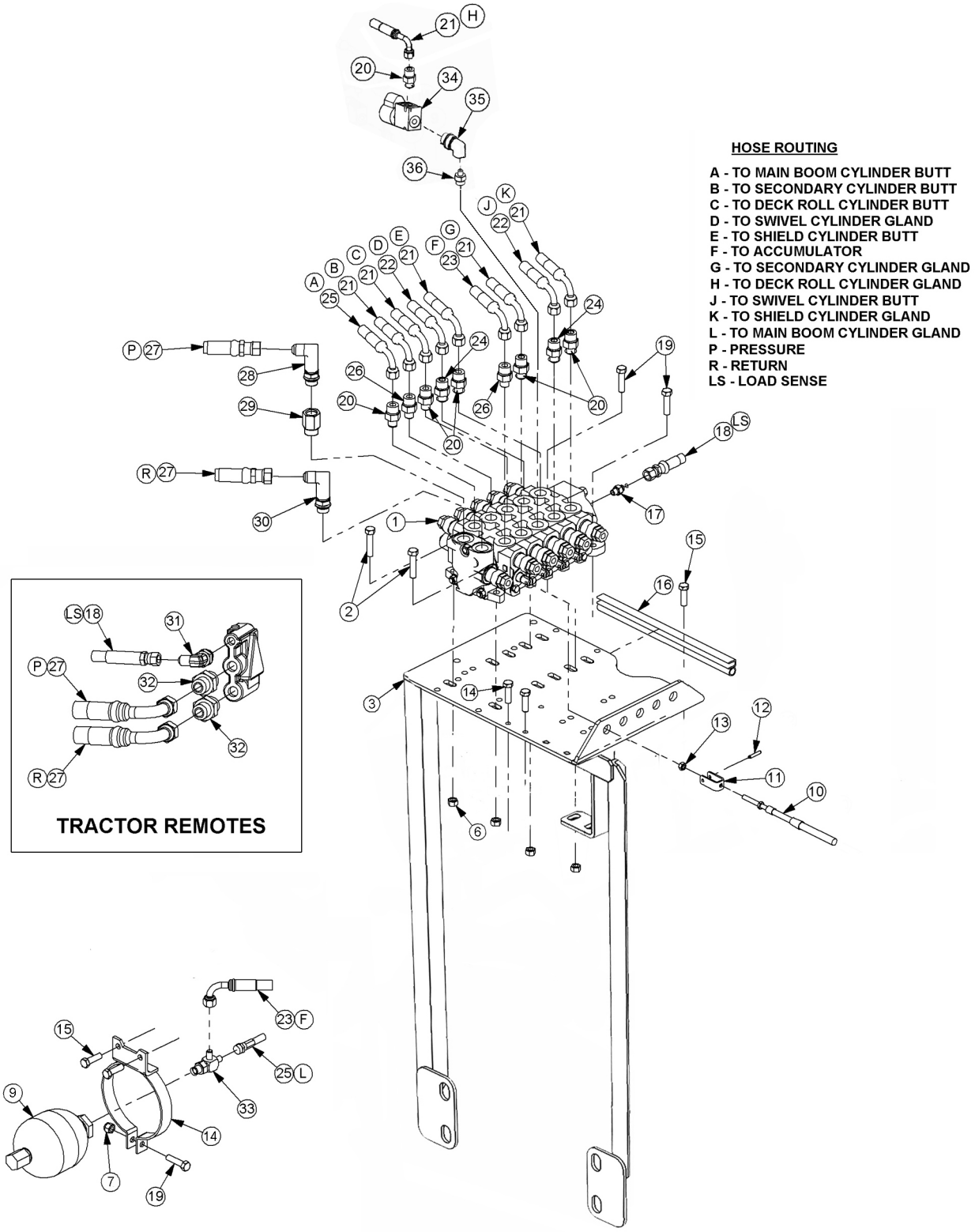

JD6145-55M-R BENGAL

CABLE (MANUAL) LIFT VALVE - 5 SPOOL

Continued...

ITEM	PART NO.	QTY.	DESCRIPTION
1	06502038	1	VALVE,CABLE,5 SPOOL
2	21633	2	CAPSCREW,3/8" X 1-3/4",NC
3	06340048	1	PLATE,VALVE,REAR MNT
4	22016	4	FLATWASHER,3/8"
5	21988	8	LOCKWASHER,3/8"
6	21625	8	HEX NUT,3/8",NC
7	21627	5	NYLOCK NUT,3/8",NC
9	24300	1	ACCUMULATOR
10	06505100	5	CBL,CNTRL,108"
11	6T4411	5	CLEVIS,CBL CTRL,3/16"
12	6T3017	5	ROLLPIN,3/16" X 1"
13	21500	5	HEX NUT,1/4",NF
14	23888	1	BRKT,ACCUMULATOR
15	21631	8	CAPSCREW,3/8" X 1-1/4",NC
16	28053	1	TRM LK,9/16X1/8FN PBL*100-1/8
17	32901	1	ADAPTER,3/8"MOR X 3/8"MJ
18	06500400	1	HOSE,1/4" X 34"
19	21632	3	CAPSCREW,3/8" X 1-1/2",NC
20	33271	6	ADAPTER,1/2"MOR X 3/8"MJ
21	06500687	6	HOSE,1/4" X 268"
22	06500697	2	HOSE,1/4" X 210"
23	33744	1	HOSE,1/4" X 34"
24	06503206	2	ADAPTER,RSTRCT,.0465
25	06500914	2	HOSE,1/4" X 296"
26	06502036	2	VLV,CHECK,W/.06" ORF,1/2"MOR
27	06500171	2	HOSE,1/2" X 36"
28	33293	1	ELBOW,LONG
29	32678	1	ADAPTER,5/8"MOR X 1/2"FOR
30	33383	1	ELBOW,LONG
31	06503013	1	ELBOW,14MM MOR X 5/16"MJ
32	33463	2	ADAPTER,22MM MOR X 1/2"MJ
33	06503029	1	TEE,RUN
34	06510050	1	TRAVEL LOCK, METRIPACK COIL
35	33382	1	ELBOW
36	06503019	1	ADAPTER, 1/2"MB X 1/2" FJX

©2017 Alamo Group Inc.

5 SPOOL CABLE CONTROL MOUNT

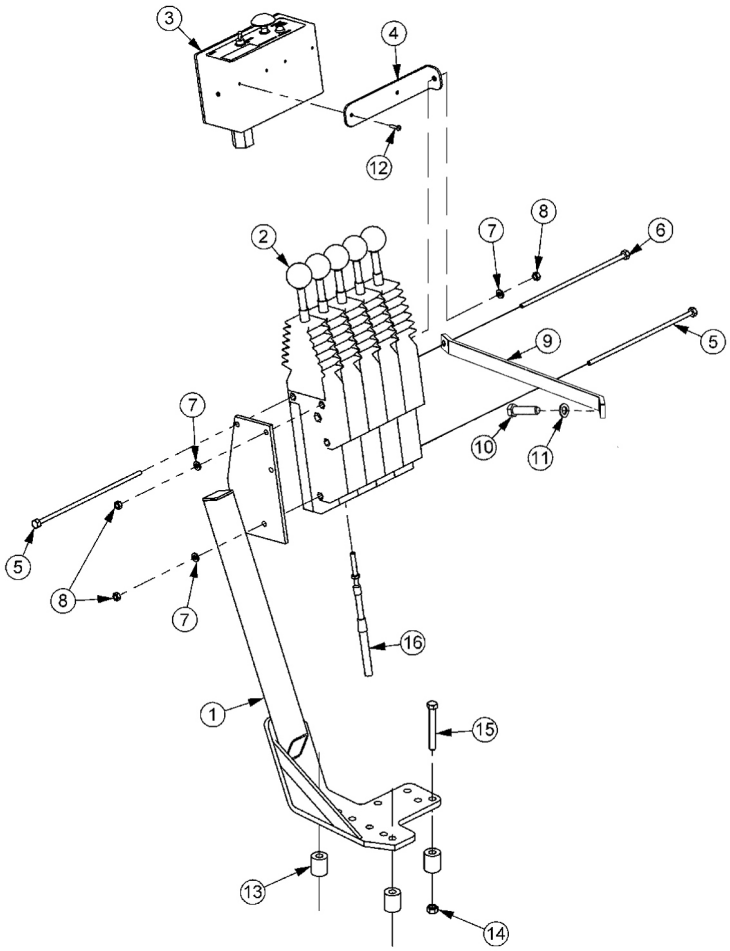

ITEM	PART NO.	QTY.	DESCRIPTION
1	23865B	1	CBL CTRL MT BRKT
2	6T1251	5	CBL CTRL BOX,180 DEG
3	06510100	1	SWITCHBOX,BOOM
4	34496	1	BRKT,SWITCHBOX,UNI
5	21548	2	CAPSCREW,1/4" X 9",NC
6	34332	1	CAPSCREW,1/4" X 9-1/4",NC
7	21986	3	LOCKWASHER,1/4"
8	21525	3	HEX NUT,1/4",NC
9	30750A	1	SUPPORT,MNT,CNTRL BOX
10	33534	1	CAPSCREW,10MM X 20MM,1.5P
11	32691	1	LOCKWASHER,10MM
12	6T3951	2	SCREW,MACHINE 8/32" X 1/2",NC
13	27082B	3	SPACER
14	21627	3	NYLOCK NUT,3/8",NC
15	21635	3	CAPSCREW,3/8" X 2-1/4",NC
16	06505100	5	CBL,CNTRL,108

JD6145-55M-R BENGAL

©2017 Alamo Group Inc.

NOTES

©2017 Alamo Group Inc.

BOOM MOUNT KIT

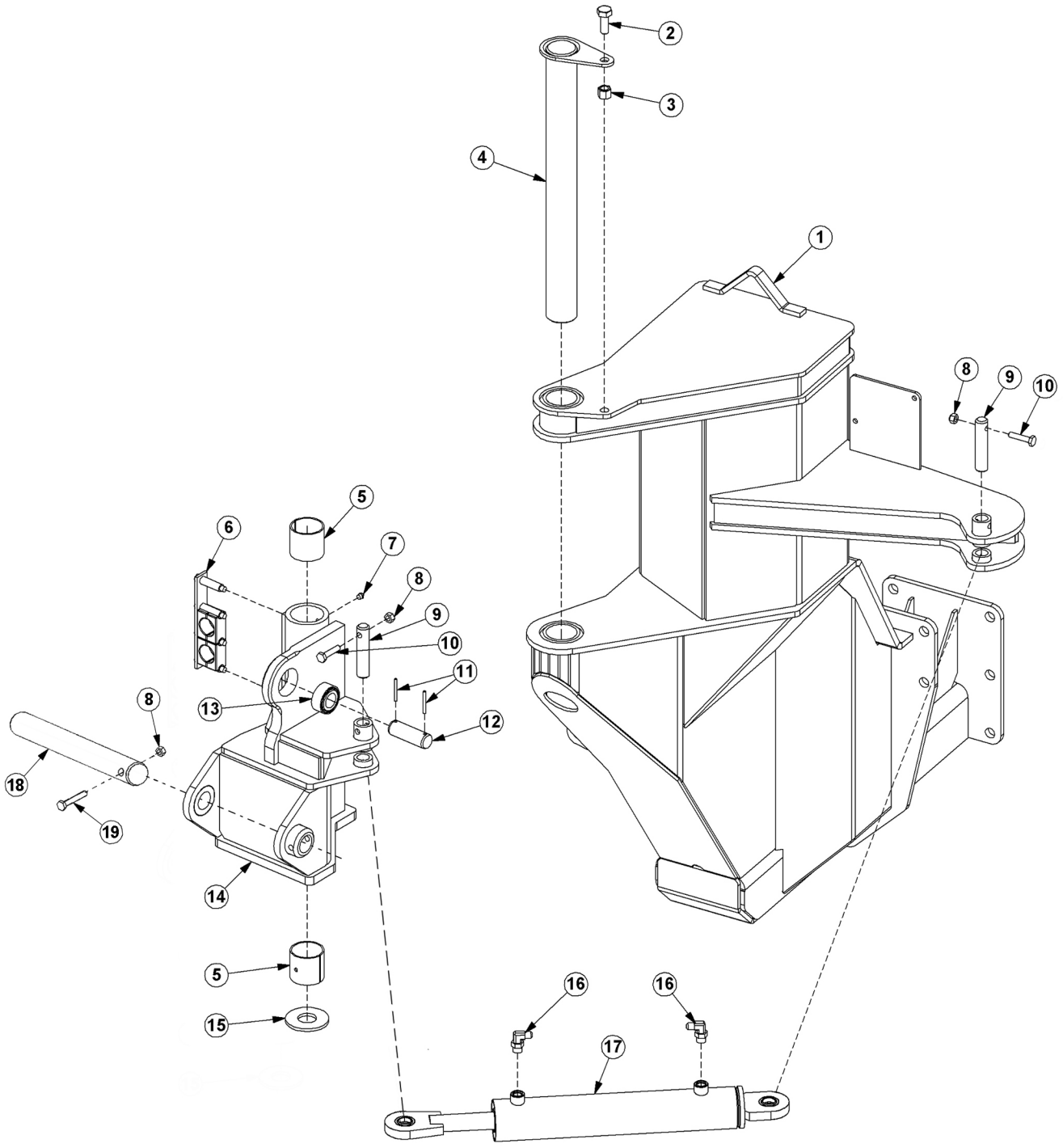

JD6145-55M-R BENGAL

Continued...

ITEM	PART NO.	QTY.	DESCRIPTION
1	------	-	MAINFRAME *REFER TO TRACTOR MOUNT KIT
2	21782	1	CAPSCREW,5/8" X 1-3/4",NC
3	21777	1	NYLOCK NUT,5/8",NC
4	32381	1	PIN,CAPPED
5	32322	2	BUSHING
6	06505186	1	CLAMP KIT
7	6T3211	2	GREASE ZERK,1/8"NPT
8	21677	3	NYLOCK NUT,7/16",NC
9	32380	2	PIN,1"
10	21683	2	CAPSCREW,7/16" X 2",NC
11	TB1023	2	ROLL PIN
12	06420100	1	PIN,1-1/4"
13	------	-	SPHERICAL BEARING *NOT FOR SALE
14	06700221	1	SWIVEL ASSEMBLY
---	06310190	1	SWIVEL WELDMENT
15	06520250	1	BEARING,WASHER
16	32810	2	ADAPTER,ELBOW
17	06501029	1	CYLINDER,3" X 13.88"
18	06420022	1	PIN, 1/5" X 12"
19	21688	1	CAPSCREW, 7/16" X 3-1/4"

©2017 Alamo Group Inc.

OPEN STOW BOOMREST

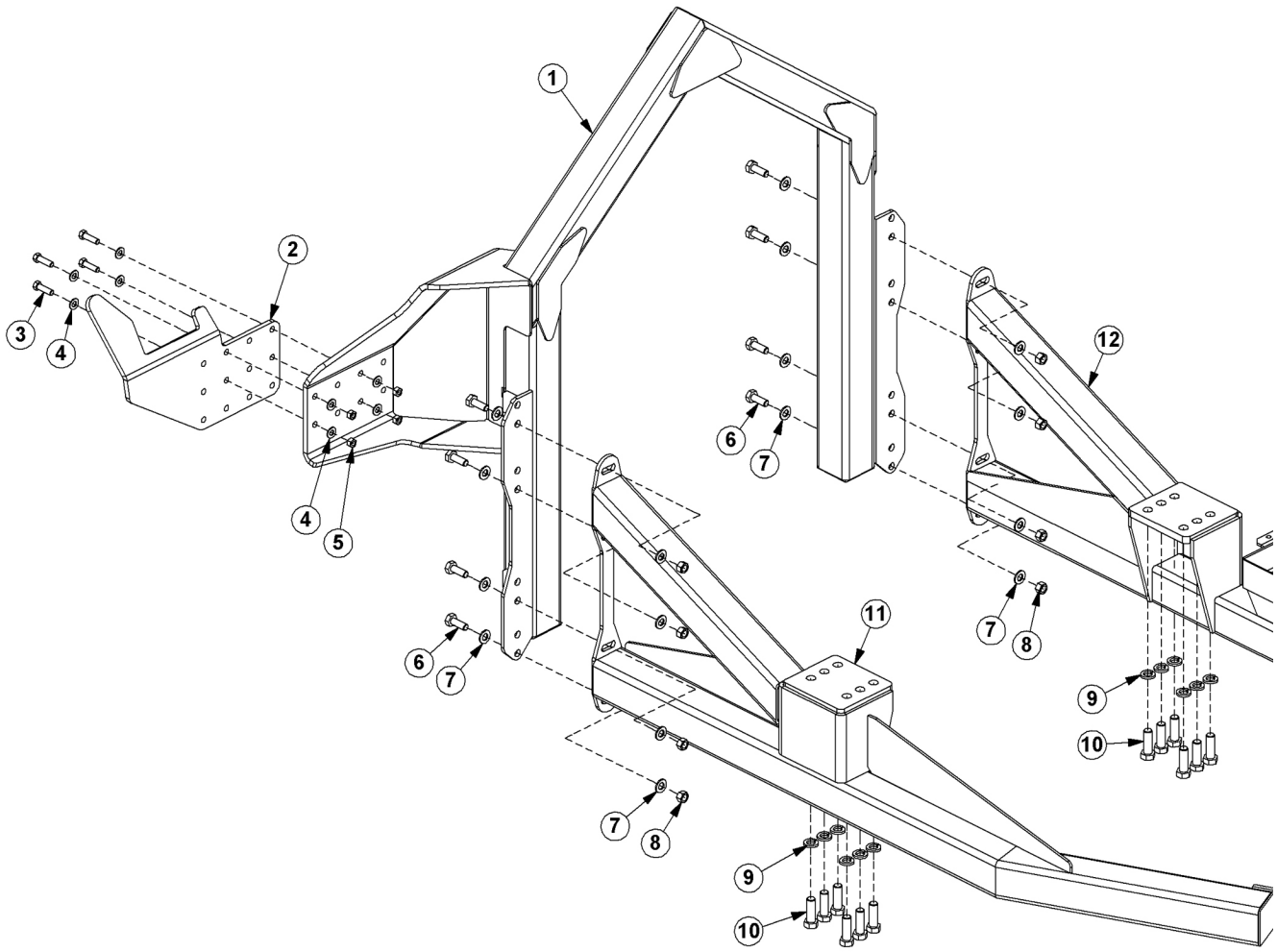

JD6145-55M-R BENGAL

Continued...

ITEM	PART NO.	QTY.	DESCRIPTION
1	06310155	1	BOOMREST,OS
2	06410968	1	SADDLE
3	21732	4	CAPSCREW,1/2" X 1-3/4",NC
4	06533004	8	FLATWASHER,1/2",SAE
5	21725	4	HEX NUT,1/2",NC
6	21782	8	CAPSCREW,5/8" X 1-3/4",NC
7	33764	16	FLATWASHER,5/8",SAE
8	21777	8	NYLOCK NUT,5/8",NC
9	33380	12	FLATWASHER, 3/4" GR8, SAE
10	27281	12	CAPSCREW,20MM X 60MM,2.5P
11	06300356	1	AXLE BRACE,RH, JD6155M, 45-55R
---	06300345	1	AXLE BRACE, RH, JD6145M
12	06300357	1	AXLE BRACE,LH, JD6155M, 45-55R
----	06300346	1	AXLE BRACE, LH, JD6145M

©2017 Alamo Group Inc.

POLYCARBONATE SAFETY WINDOW

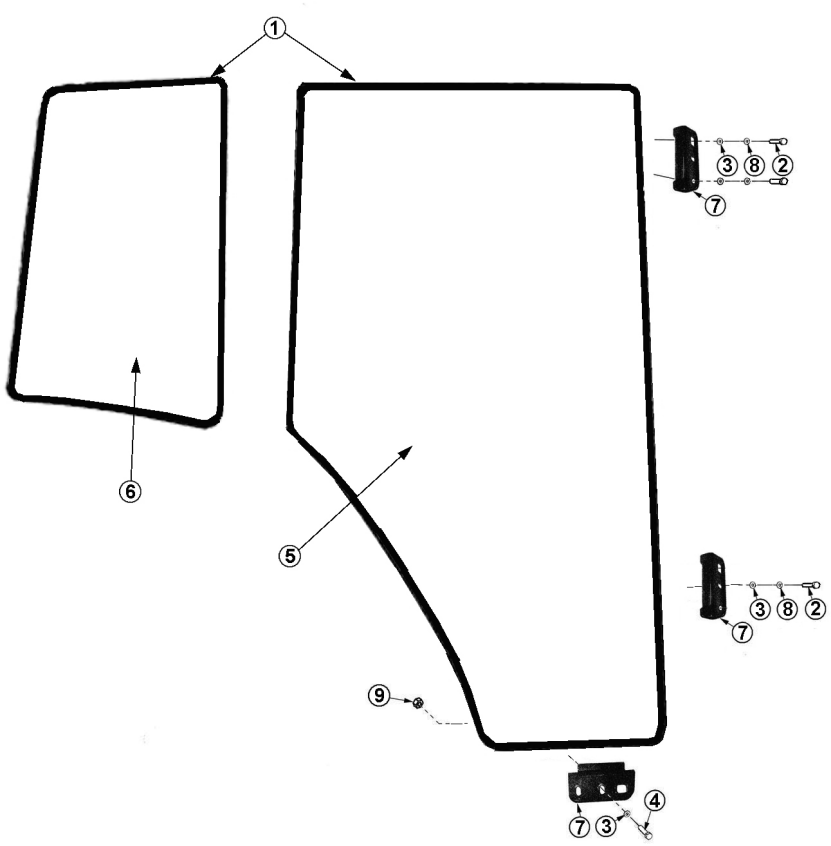

ITEM	PART NO.	QTY.	DESCRIPTION
1	31965	22	TRIM SEAL,3/8" CLIP X 3/4"OD (FEET)
2	27508	3	CAPSCREW,8MM X 20MM,1.25P
3	22015	4	FLATWASHER,5/16"
4	21581	1	CAPSCREW,5/16" X 1-1/4",NC
5	06490005	1	POLYCARB,FRMD,DOOR,RH
6	06490027	1	POLYCARB,FRMD,REAR,RH
7	06520040	3	BRKT,JD,POLY,RETAIN
8	6T2619	3	LOCKWASHER,8MM
9	21577	1	NYLOCK NUT,5/16",NC

JD6145-55M-R BENGAL

©2017 Alamo Group Inc.

NOTES

©2017 Alamo Group Inc.

AXLE STABILIZER - VERSION ONE

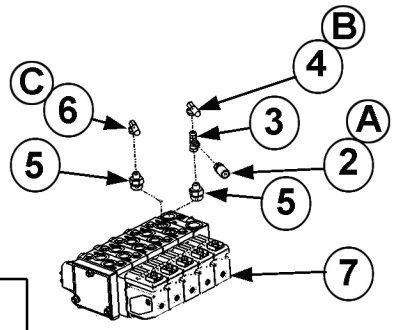

HOSE ROUTING KEY

A- FROM 1B PORT ON LIFT VALVE TO STABILIZER CYLINDER GLAND

B-FROM 1B PORT ON LIFT VALVE TO MAIN BOOM CYLINDER BUTT

C- FROM 1A PORT ON LIFT VALVE TO ACCUMULATOR

D- FROM ACCUMULATOR TO MAIN BOOM CYLINDER GLAND

E- FROM STABILIZER CYLINDER BUTT TO ACCUMULATOR

NOTE: THIS INFORMATION REFERS TO JD6145-55M TRACTORS WITH SERIAL NUMBERS OF 866615 OR LOWER OR JD6145-55R TRACTORS WITH SERIAL NUMBERS OF 027000 OR LOWER.

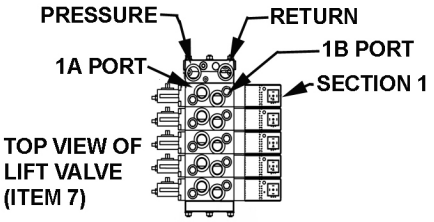

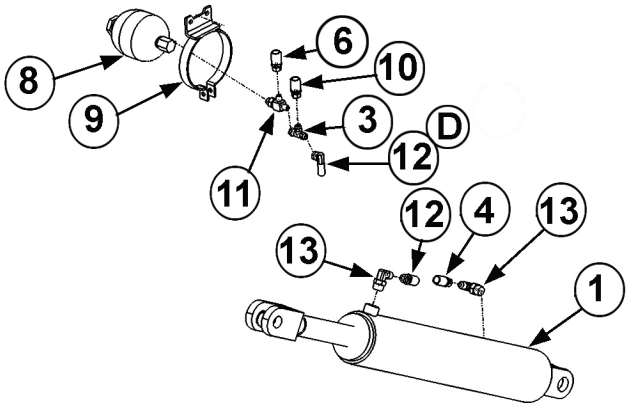

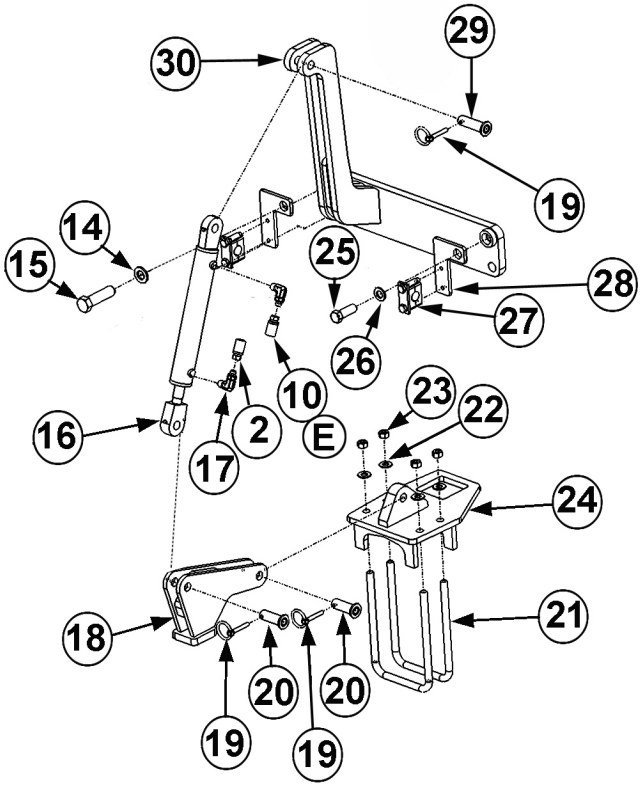

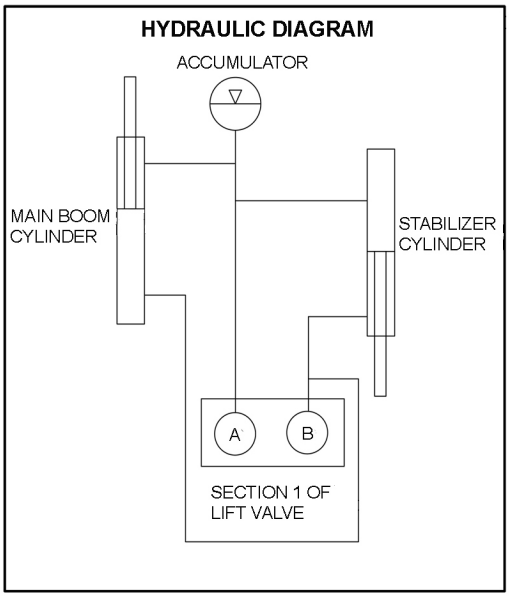

LOCATE HOLE IN ITEM 24 AROUND AXLE STOP ON RIGHT FRONT AXLE.

USE ITEMS 21, 22, & 23 TO CLAMP ITEM 24 TO AXLE.

AFTER INSTALLATION, ARTICULATE FRONT AXLE FROM STOP TO STOP AND EXTEND AND RETRACT CYLINDER FULLY TO ENSURE A PROPER FIT.

JD6145-55M-R BENGAL

Continued...

ITEM	PART NO.	QTY.	DESCRIPTION
1	------	-	BOOM CYLINDER *REFER TO COMMON SECTION
2	06500730	1	HOSE,3/8" X 227"
3	06503048	2	RUN TEE,3/8"MJ X 3/8"FJX X 3/8"MJ
4	------	-	HOSE *REFER TO LIFT VALVE PAGE
5	------	-	ADAPTER *REFER TO LIFT VALVE PAGE
6	------	-	HOSE *REFER TO LIFT VALVE PAGE
7	------	-	LIFT VALVE *REFER TO LIFT VALVE PAGE
8	------	-	ACCUMULATOR *REFER TO LIFT VALVE PAGE
9	------	-	ACCUMULATOR BRKT *REFER TO LIFT VALVE PAGE
10	06500731	1	HOSE,3/8" X 234"
11	------	-	RUN TEE *REFER TO LIFT VALVE PAGE
12	------	-	HOSE *REFER TO LIFT VALVE PAGE
13	------	-	ELBOW *REFER TO LIFT VALVE PAGE
14	33880	2	FLATWASHER,3/4",SAE
15	32703	1	CAPSCREW,20MM X 100MM,2.5P
16	33785	1	CYLINDER,1-1/2" X 8"
17	06503055	2	ELBOW,1/4"MOR X 3/8"MJ
18	06310132	1	LINK,PIVOT,STABILIZER
19	RD1032	3	LYNCH PIN
20	33984	2	PIN,3/4" X 2-7/16"
21	06420164	2	U-BOLT
22	06533004	4	FLATWASHER,1/2",SAE
23	21700	4	HEX NUT,1/2",UNC
24	06310133	1	MOUNT,AXLE
25	------	-	CAPSCREW *REFER TO LIFT VALVE PAGE
26	------	-	FLATWASHER *REFER TO LIFT VALVE PAGE
27	------	-	CLAMP KIT *REFER TO LIFT VALVE PAGE
28	------	-	BRACKET *REFER TO LIFT VALVE PAGE
29	34799	1	PIN,3/4" X 2-15/16"
30	06310177	1	STABILIZER,AXLE,CYL MNT

©2017 Alamo Group Inc.

AXLE STABILIZER - VERSION TWO

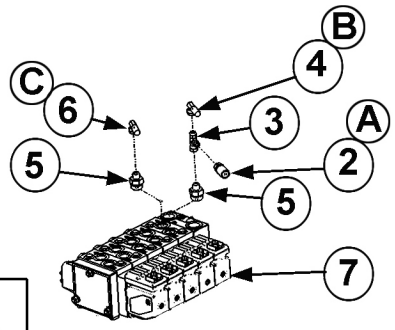

HOSE ROUTING KEY

A- FROM 1B PORT ON LIFT VALVE TO STABILIZER CYLINDER GLAND

B-FROM 1B PORT ON LIFT VALVE TO MAIN BOOM CYLINDER BUTT

C- FROM 1A PORT ON LIFT VALVE TO ACCUMULATOR

D- FROM ACCUMULATOR TO MAIN BOOM CYLINDER GLAND

E- FROM STABILIZER CYLINDER BUTT TO ACCUMULATOR

NOTE: THIS INFORMATION REFERS TO JD6145-55M TRACTORS WITH SERIAL NUMBERS OF 866616 AND HIGHER OR JD6145-55R TRACTORS WITH SERIAL NUMBERS OF 027001 OR HIGHER.

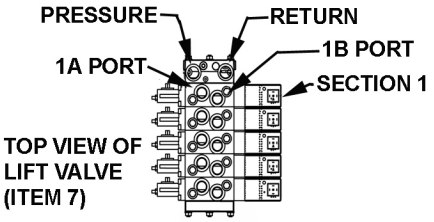

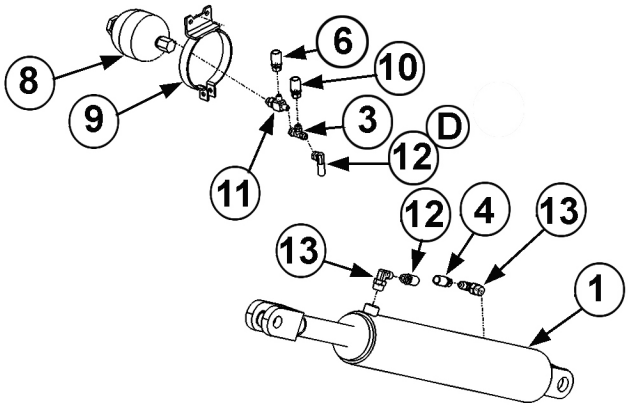

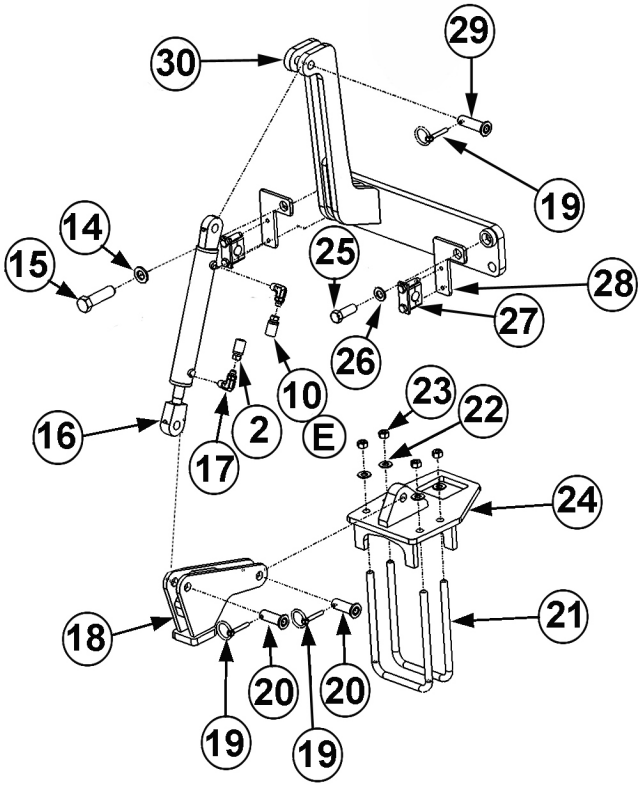

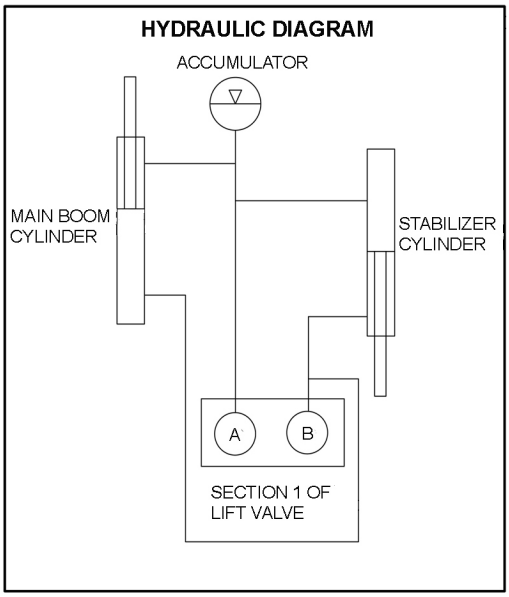

LOCATE HOLE IN ITEM 24 AROUND AXLE STOP ON RIGHT FRONT AXLE.

USE ITEMS 21, 22, & 23 TO CLAMP ITEM 24 TO AXLE.

AFTER INSTALLATION, ARTICULATE FRONT AXLE FROM STOP TO STOP AND EXTEND AND RETRACT CYLINDER FULLY TO ENSURE A PROPER FIT.

JD6145-55M-R BENGAL

Continued...

ITEM	PART NO.	QTY.	DESCRIPTION
1	------	-	BOOM CYLINDER *REFER TO COMMON SECTION
2	06500730	1	HOSE,3/8" X 227"
3	06503048	2	RUN TEE,3/8"MJ X 3/8"FJX X 3/8"MJ
4	------	-	HOSE *REFER TO LIFT VALVE PAGE
5	------	-	ADAPTER *REFER TO LIFT VALVE PAGE
6	------	-	HOSE *REFER TO LIFT VALVE PAGE
7	------	-	LIFT VALVE *REFER TO LIFT VALVE PAGE
8	------	-	ACCUMULATOR *REFER TO LIFT VALVE PAGE
9	------	-	ACCUMULATOR BRKT *REFER TO LIFT VALVE PAGE
10	06500731	1	HOSE,3/8" X 234"
11	------	-	RUN TEE *REFER TO LIFT VALVE PAGE
12	------	-	HOSE *REFER TO LIFT VALVE PAGE
13	------	-	ELBOW *REFER TO LIFT VALVE PAGE
14	33880	2	FLATWASHER,3/4",SAE
15	32703	2	CAPSCREW,20MM X 100MM,2.5P
16	33785	1	CYLINDER,1-1/2" X 8"
17	06503055	2	ELBOW,1/4"MOR X 3/8"MJ
18	06310204	1	LINK,PIVOT,STABILIZER
19	RD1032	3	LYNCH PIN
20	33984	2	PIN,3/4" X 2-7/16"
21	06420164	2	U-BOLT
22	06533004	4	FLATWASHER,1/2",SAE
23	21700	4	HEX NUT,1/2",UNC
24	06310203	1	MOUNT,AXLE
25	------	-	CAPSCREW *REFER TO LIFT VALVE PAGE
26	------	-	FLATWASHER *REFER TO LIFT VALVE PAGE
27	------	-	CLAMP KIT *REFER TO LIFT VALVE PAGE
28	------	-	BRACKET *REFER TO LIFT VALVE PAGE
29	34799	1	PIN,3/4" X 2-15/16"
30	06310177	1	STABILIZER,AXLE,CYL MNT

©2017 Alamo Group Inc.

WHEEL SPACER

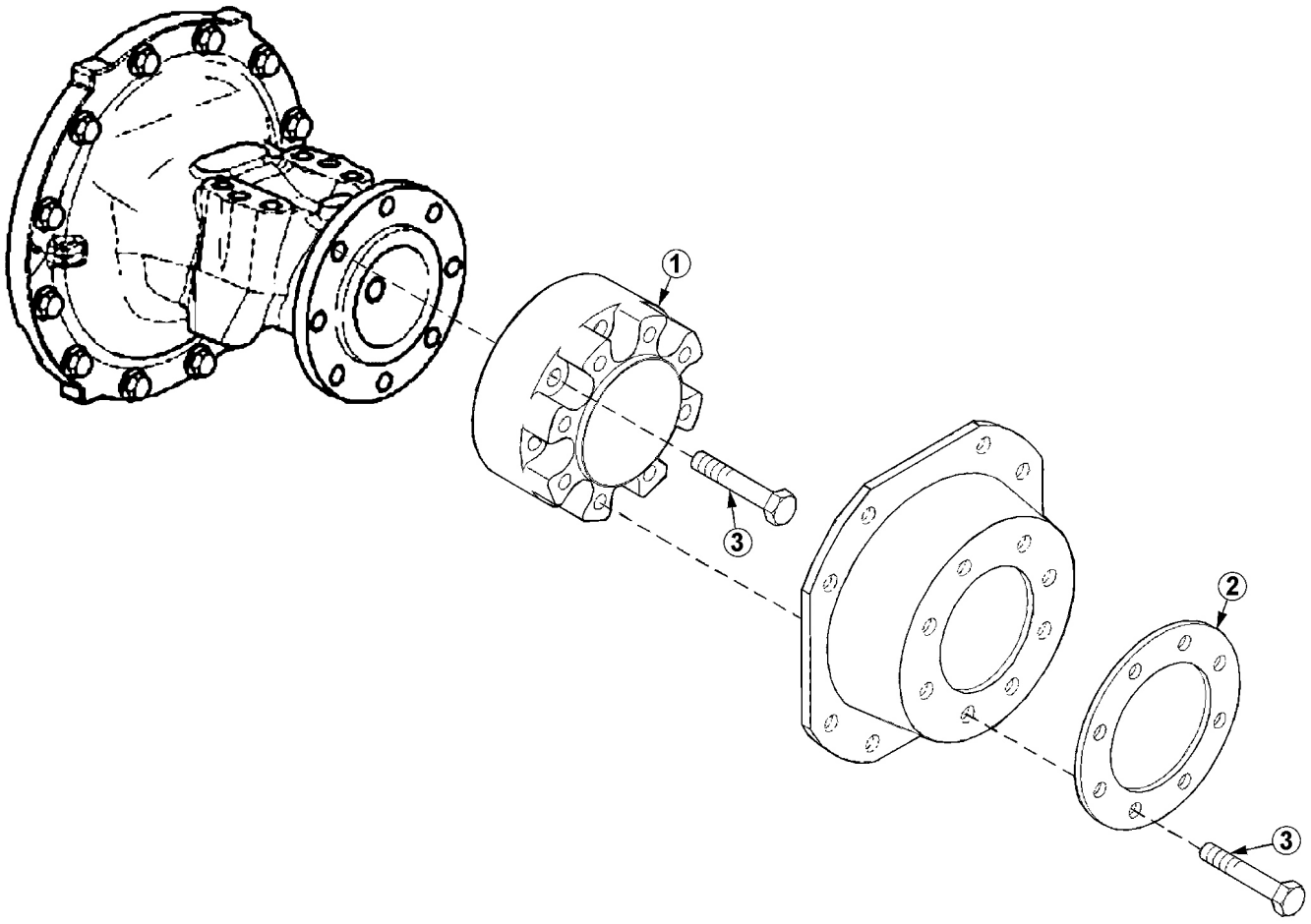

ITEM	PART NO.	QTY.	DESCRIPTION
1	AL156779	1	SPACER, WHEEL, JD, 1.732
2	06400919	1	RING, SPACER, WHEEL, JD
3	6T2548	16	CAPSCREW, 20MM X 60MM

JD6145-55M-R BENGAL

WHEEL WEIGHT

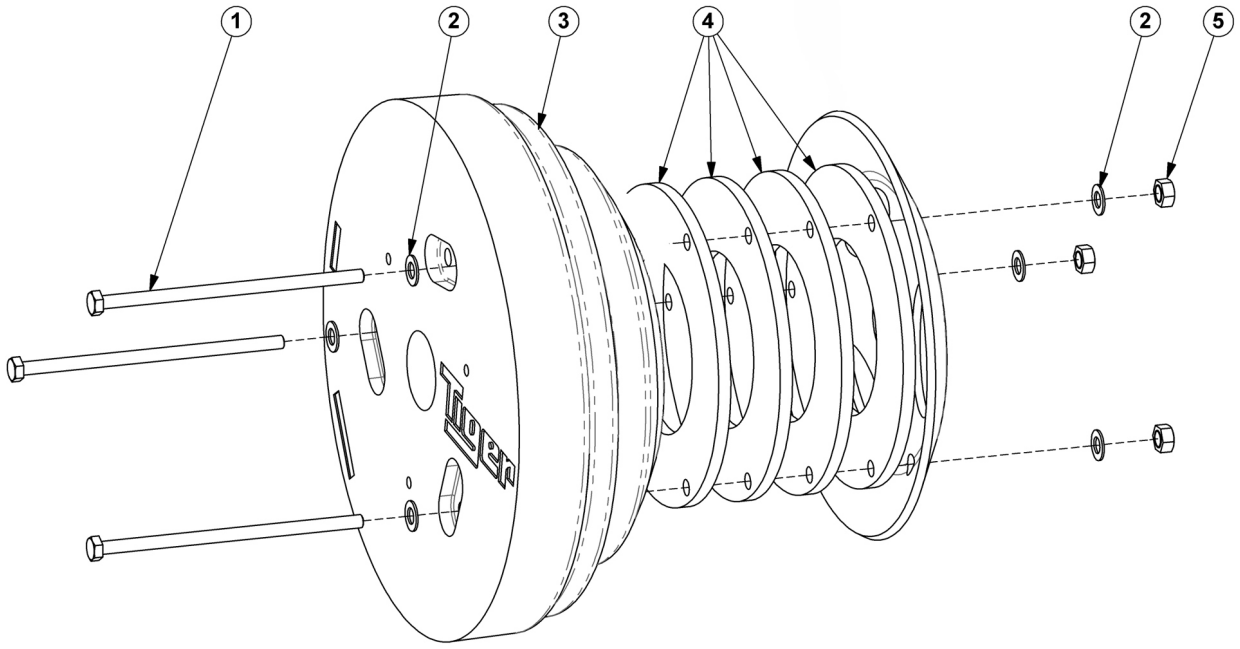

ITEM	PART NO.	QTY.	DESCRIPTION
1	06530213	3	CAPSCREW,7/8" X 16",NC,GR8
2	06533000	6	FLATWASHER,7/8",GR8
3	32517	1	WHEEL WEIGHT,1700#
4	06400410	4	SPACER
5	06531000	3	HEX NUT, 7/8", NC, GR8

JD6145-55M-R BENGAL

©2017 Alamo Group Inc.

WHEEL WEIGHT - BAR AXLE

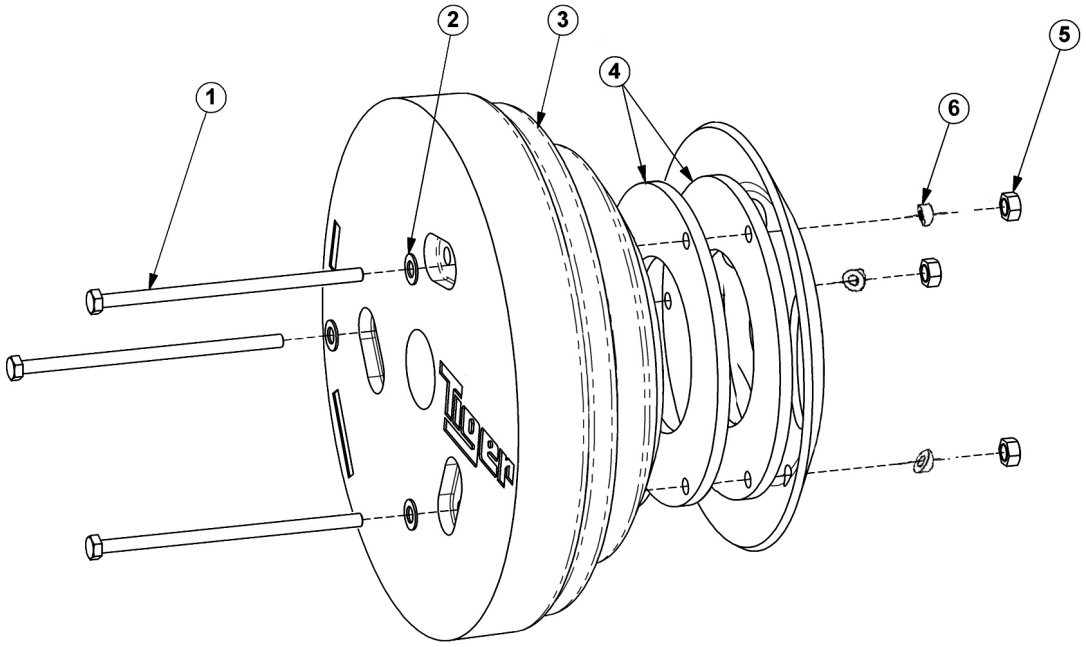

ITEM	PART NO.	QTY.	DESCRIPTION
1	06530219	3	CAPSCREW,7/8" X 19-1/2",NC,GR8
2	06533000	3	FLATWASHER,7/8",GR8
3	32517	1	WHEEL WEIGHT,1700#
4	06400410	2	SPACER
5	06531000	3	HEX NUT, 7/8", NC, GR8
6	06430183	3	SPACER, 6 DEGREE

JD6145-55M-R BENGAL

PARTS SECTION

NOTES

PART NAME INDEX

PARTS ORDERING GUIDE 5
BOOM ASSY - BENGAL 18 T4 6
BOOM ASSY BENGAL STANDARD 22 T4 8
BOOM ASSY HYD BENGAL 22 T4 10
BOOM ASSY BENGAL EXT 24 T4 12
BOOM ASSY HYD BENGAL 24 T4 14
BOOMREST - OPEN STOW 16
50IN ROTARY MOWER ASSEMBLY 18
50IN ROTARY KNIVES AND DISH 20
50IN ROTARY BLADE BAR AND KNIVES 21
60IN ROTARY MOWER ASSEMBLY 22
60IN ROTARY KNIVES AND DISH 24
60IN ROTARY BLADE BAR AND KNIVES 25
ROTARY MOWER SPINDLE ASSEMBLY 26
BOOM ROTARY PIVOT ASSEMBLY 28
50IN FLAIL DRIVE ASSEMBLY 30
50IN FLAIL MOWER ASSEMBLY 32
50IN FLAIL MOWER ASSY, PASS-THROUGH KNIVES 34
63IN FLAIL DRIVE ASSEMBLY 36
63IN FLAIL MOWER ASSEMBLY 38
BOOM FLAIL PIVOT ASSEMBLY 40
3IN X 13-7/8 IN WELDED CYLINDER BREAKDOWN 42
3IN X 18IN WELDED CYLINDER BREAKDOWN 43
3-1/2IN X 20IN WELDED CYLINDER BREAKDOWN 44
4IN X 20IN WELDED CYLINDER BREAKDOWN 45
5IN X 20IN WELDED CYLINDER BREAKDOWN 46
NOTES 47
5 SPOOL ELECTRONIC VALVE - OPEN STOW,3PS 48
5 SPOOL ELECTRONIC VALVE - SIDE STOW 50
FRONT HYDRAULIC PUMP 52
50IN AND 60IN ROTARY MOTOR BREAKDOWN 54
FLAIL MOTOR BREAKDOWN 56
RESERVOIR TANK FILTER ASSEMBLY 58
PUMP AND GRILL GUARD OPTIONS 59
BOOM TRAVEL LOCK 60
MANUAL LIFT VALVE SWITCH BOX 61
MANUAL LIFT VALVE SCHEMATIC 62
ELECTRONIC LIFT VALVE SWITCH BOX 63
ELECTRONIC LIFT VALVE SCHEMATIC 64
SOLENOID SWITCH BOX AND WIRING 65

©2015 Alamo Group Inc.

PART NAME INDEX

BRAKE VALVE ASSEMBLY..... 66
BRAKE VALVE HYDRAULIC SCHEMATIC..... 67
ELECTRICAL TROUBLESHOOTING GUIDE..... 68
HYDRAULIC TROUBLESHOOTING GUIDE..... 69
TROUBLESHOOTING..... 70
TROUBLESHOOTING - CONTINUED..... 71
WHEEL WEIGHT - BENGAL 18..... 72

©2015 Alamo Group Inc.

The following instructions are offered to help eliminate needless delay and error in processing purchase orders for the equipment in this manual.

1. The Parts Section is prepared in logical sequence and grouping of parts that belong to the basic machine featured in this manual. Part Numbers and Descriptions are given to help locate the parts and quantities required.

2. The Purchase Order must indicate the **Name and Address** of the person or organization ordering the parts, **who should be charged**, and if possible, the **serial number of the machine** for which the parts are being ordered.

3. The purchase order must clearly list the **quantity of each part**, the complete and correct **part number**, and the basic **name of the part**.

4. The manufacturer reserves the right to substitute parts where applicable.

5. Some parts may be unlisted items which are special production items not normally stocked and are subject to special handling. Request a quotation for such parts before sending a purchase order.

6. The manufacturer reserves the right to change prices without prior notice.

NOTE: When ordering replacement decals, refer to the part numbers and descriptions listed in the safety section in the front of this manual.

1000

For maximum safety and to guarantee optimum product reliability, always use genuine **Tiger** replacement parts. The use of inferior replacement parts may cause premature or catastrophic failure which could result in serious injury or death.

Direct any questions regarding parts to:

Tiger Corporation
3301 N. Louise Ave.
Sioux Falls, SD 57107
1-800-843-6849
1-605-336-7900

©2015 Alamo Group Inc.

BOOM ASSY - BENGAL 18 T4

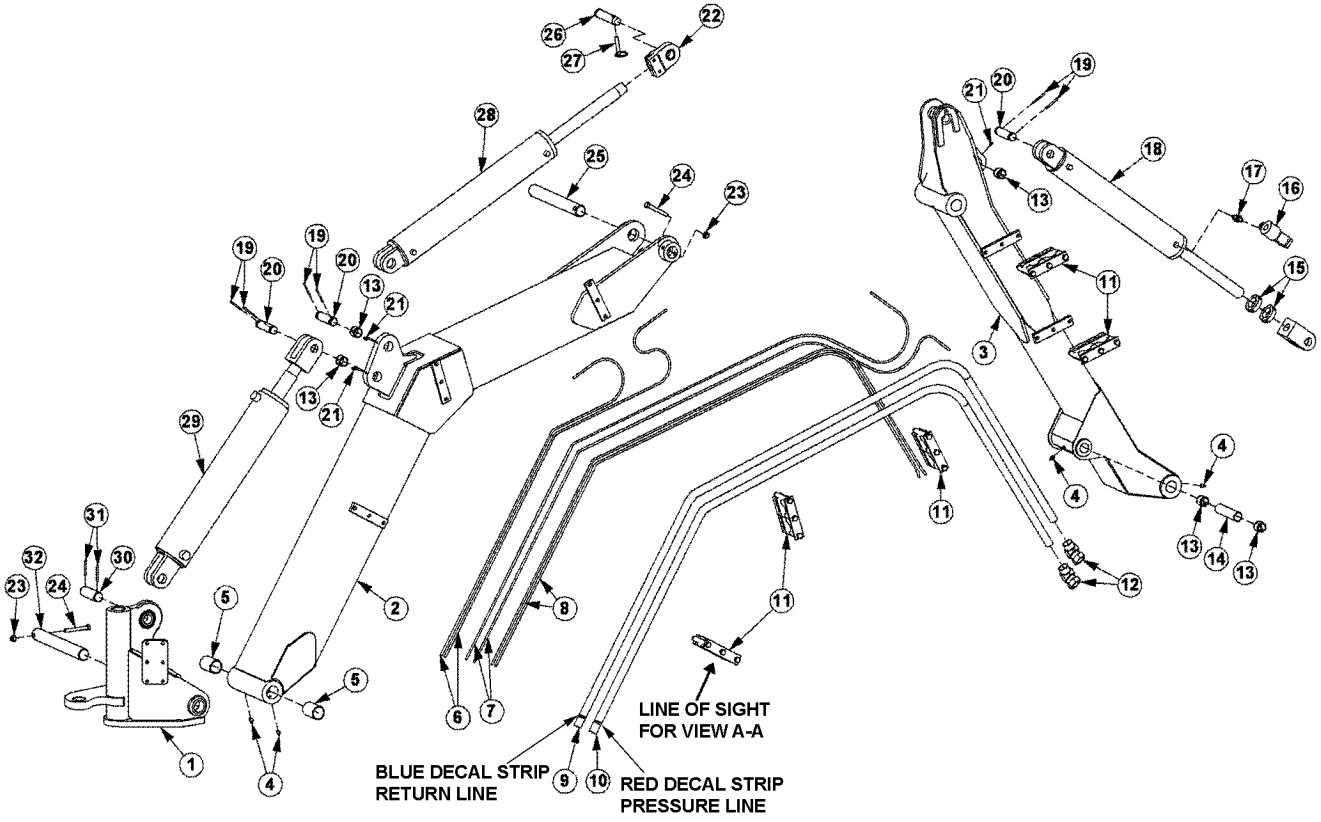

NOTES:

1. IMPORTANT: ALIGN GREASE HOLE OR GAP IN BEARING (ITEMS 5 & 13) WITH GREASE ZERK IN BOOM. MAINTAIN ALIGNMENT DURING BEARING INSTALLATION.
2. GREASE HINGE PIN ZERKS (ITEM 4) ON BOOM AFTER ASSEMBLY, ONCE UNDER LOAD WITH BOOM ELEVATED AND AGAIN AT REST WITH BOOM SUPPORTED.
3. ONLY ONE SET COLLAR (ITEM 15) NEEDED FOR ROTARY MOWERS.

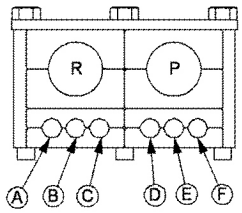

VIEW A-A

KEY

A - SECONDARY BUTT
B - SECONDARY GLAND
C - DECK ROLL BUTT
D - DECK ROLL GLAND
E - SHIELD BUTT
F - SHIELD GLAND
R - RETURN
P - PRESSURE

COMMON BENGAL T4

Continued...

ITEM	PART NO.	QTY.	DESCRIPTION
1	----	-	REAR STOW SWIVEL ASSY
2	06700167	-	MAIN BOOM ASSY
---	06310111	1	MAIN BOOM WELDMENT
3	06700168	-	SECONDARY BOOM ASSY
----	06310112	1	SECONDARY BOOM WELDMENT
4	6T3211	4	GREASE ZERK,1/8”
5	32321	2	BEARING, DX, 1-1/2" X 2"
6	06500499	2	HOSE,1/4" X 50"
7	06500500	2	HOSE,1/4" X 108"
8	06500502	2	HOSE,1/4" X 100"
9	06500713	1	HOSE,1" X 163"
10	06500714	1	HOSE,1" X 162"
11	06505116	2	CLAMP KIT
12	24724	2	SWIVEL,1MJ X 1FJX45
13	TB3010	3	BUSHING
14	TB1035	1	BUSHING,SPACER
15	35312	1	SET COLLAR
16	06510050	1	TRAVEL LOCK,METRIPACK COIL
17	31329	1	ADAPTER,1/2ORB X 1/2ORB ADJ
18	06501023	1	DECK ROLL CYLINDER,3" X 18"
19	06537021	6	ROLL PIN,5MM
20	TB1033	4	PIN,1”
21	6T3207	4	GREASE ZERK,1/4”
22	TB3033	1	CLEVIS WITH SPHERICAL BEARING
23	21677	2	NYLOCK NUT,7/16",NC
24	21688	2	CAPSCREW,7/16" X 3-1/4",NC
25	TB1025	1	PIN,1-1/2”
26	TB1036	1	PIN,1”
27	TF1143	1	PIN,LYNCH
28	06501024	1	SECONDARY CYLINDER,3-1/2" X 20"
29	06501022	1	MAIN CYLINDER,4" X 20"
30	06420100	1	PIN,1-1/4”
31	TB1023	2	ROLL PIN,7/32"
32	TB3013C	1	PIN,1-1/2"

COMMON BENGAL T4

©2015 Alamo Group Inc.

BOOM ASSY BENGAL STANDARD 22 T4

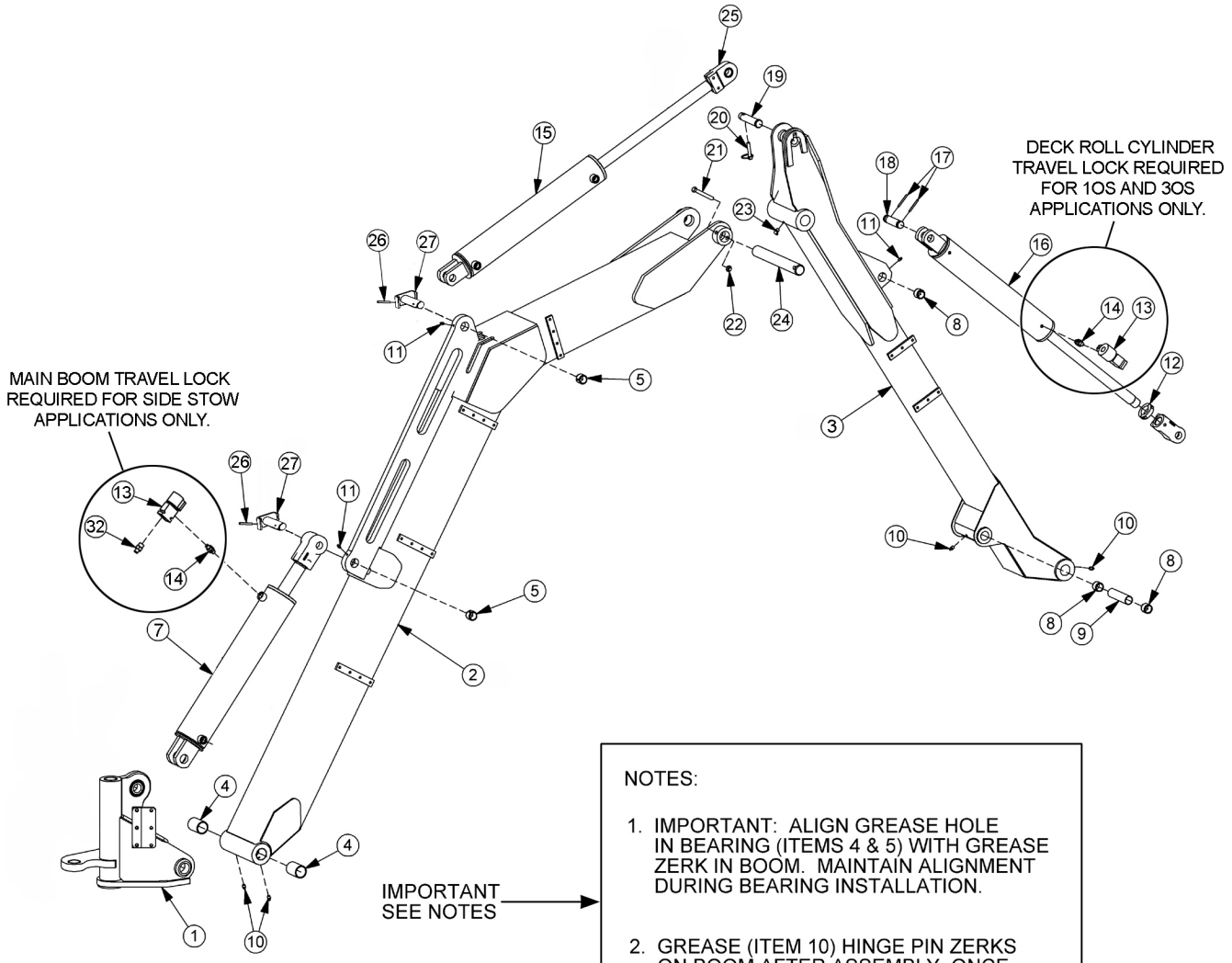

COMMON BENGAL T4

Continued...

ITEM	PART NO.	QTY.	DESCRIPTION
1	------	-	SWIVEL ASSY *REFER TO TRACTOR MOUNT KIT
2	06700189	1	MAIN BOOM, T4
3	24517	1	SECONDARY BOOM ARM ASSY
4	32321	2	BEARING, DX, 1-1/2" X 2"
5	TB1044	2	BUSHING, 1-1/4”ID
7	06501020	1	CYLINDER, 5" X 20"
8	TB3010	3	BUSHING, 1”ID
9	TB1035	1	BUSHING,SPACER
10	6T3211	4	GREASE ZERK,1/8”
11	6T3207	3	GREASE ZERK,1/4
12	35312	1	SET COLLAR
13	06510050	1	TRAVEL LOCK,METRIPACK COIL
14	31329	1	ADAPTER,1/2ORB X 1/2ORB ADJ
15	06501022	1	CYLINDER, 4" X 20"
16	06501023	1	CYLINDER,3” X 18”
17	06537021	6	ROLL PIN,5MM
18	TB1033	1	PIN,1” X 4”
19	TB1036	1	PIN,1” X 4-11/16”
20	TF1143	1	PIN,LYNCH
21	21688	2	CAPSCREW,7/16” X 3-1/4”,NC
22	21677	2	NYLOCK NUT,7/16”,NC
23	6T3210	1	GREASE ZERK,1/8” X 90º
24	TB1025	1	PIN,1-1/2” X 12”
25	30172	1	CLEVIS,SPHERICAL
26	6T3014	2	ROLL PIN, 1/4" X 2"
27	TB1045B	2	PIN, PRIMARY CYLINDER

©2015 Alamo Group Inc.

BOOM ASSY HYD BENGAL 22 T4

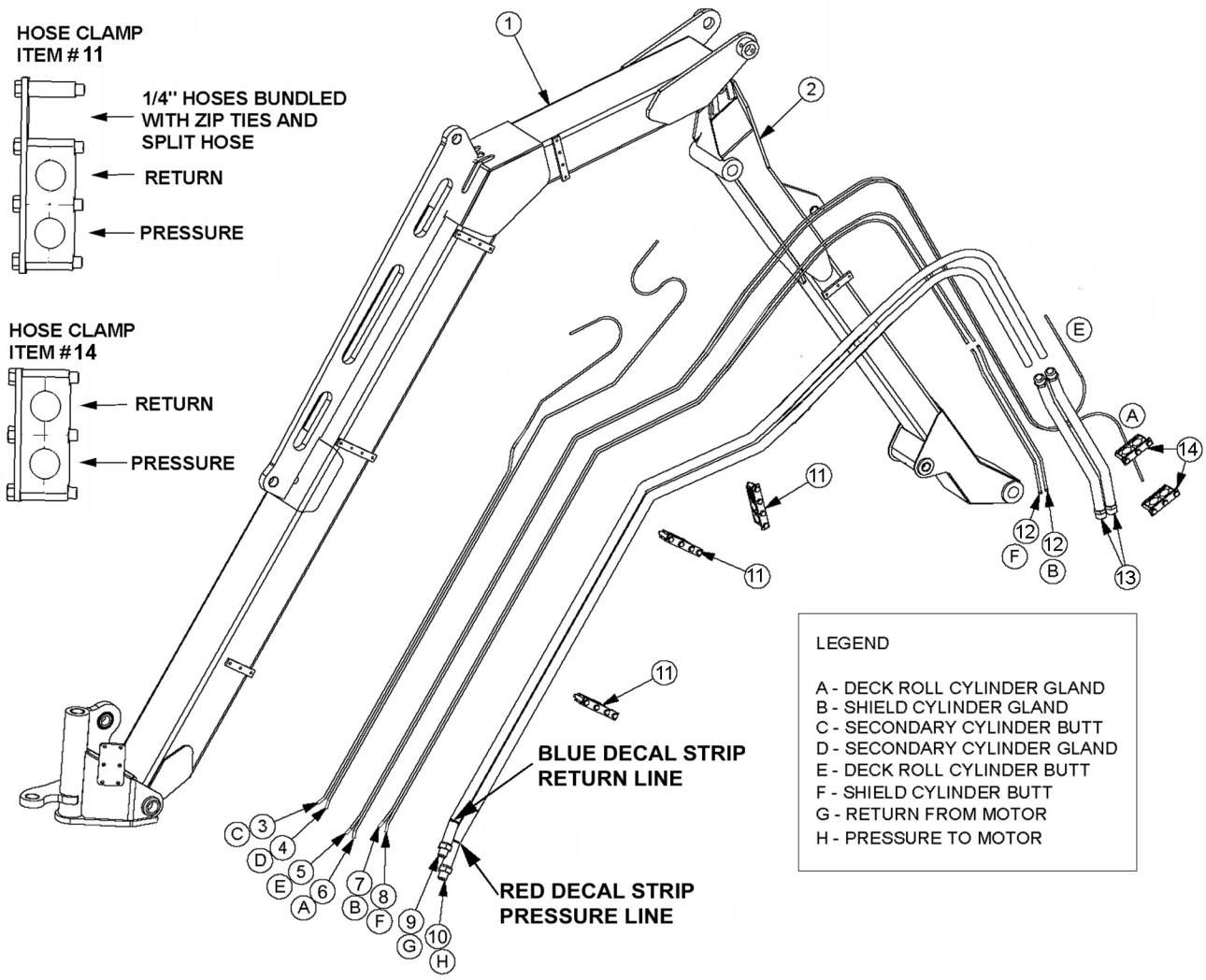

COMMON BENGAL T4

BOOM ASSY HYD BENGAL 22 T4

Continued...

ITEM	PART NO.	QTY.	DESCRIPTION
1	------	-	MAIN BOOM *REFER TO BOOM ARM ASSY
2	------	-	SECONDARY BOOM *REFER TO BOOM ARM ASSY
3	06500694	1	HOSE, 1/4" X 83"
4	---	1	HOSE, 1/4" X 83"
5	06500695	1	HOSE, 1/4" X 138"
6	----	1	HOSE, 1/4" X 138"
7	06500696	1	HOSE, 1/4" X 112"
8	---	1	HOSE, 1/4" X 112"
9	34645	1	HOSE, 1" X 182"
10	---	1	HOSE, 1" X 182"
11	06505019	3	CLAMP KIT,3 SECTION
12	34102	2	TUBE,PRFRMD,SEC BOOM
13	2403306	2	TUBE,PRFRMD,SEC BOOM,HP
14	30111	2	CLAMP KIT,2 SECTION

©2015 Alamo Group Inc.

BOOM ASSY BENGAL EXT 24 T4

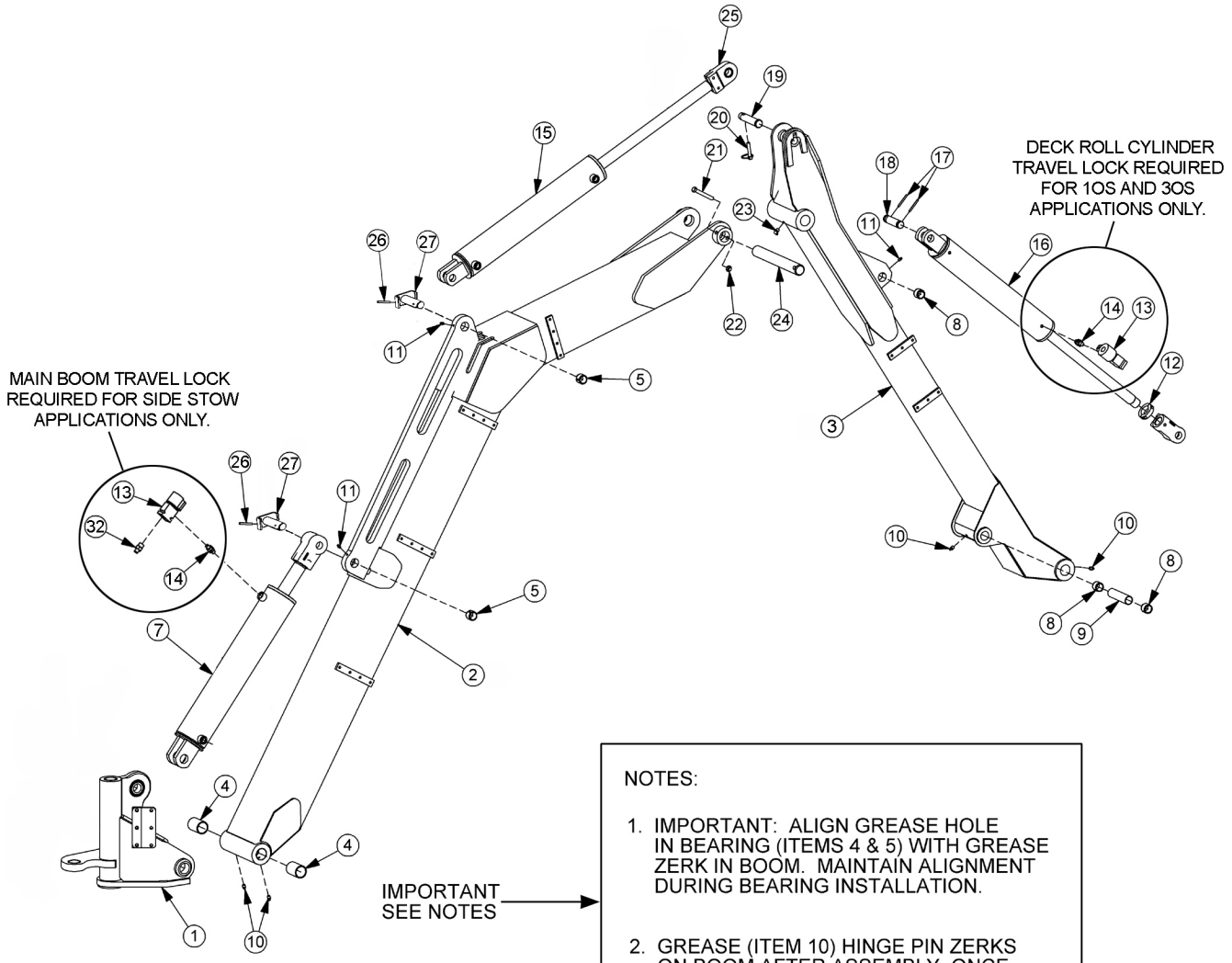

COMMON BENGAL T4

Continued...

ITEM	PART NO.	QTY.	DESCRIPTION
1	------	-	SWIVEL ASSY *REFER TO TRACTOR MOUNT KIT
2	06700191	1	MAIN BOOM, EXT, T4
3	06700094	1	SECONDARY BOOM ARM ASSY, EXT, T4
4	32321	2	BEARING, DX, 1-1/2" X 2"
5	TB1044	2	BUSHING, 1-1/4”ID
7	06501020	1	CYLINDER, 5" X 20"
8	TB3010	3	BUSHING, 1”ID
9	TB1035	1	BUSHING,SPACER
10	6T3211	4	GREASE ZERK,1/8”
11	6T3207	3	GREASE ZERK,1/4
12	35312	1	SET COLLAR
13	06510050	1	TRAVEL LOCK,METRIPACK COIL
14	31329	1	ADAPTER,1/2ORB X 1/2ORB ADJ
15	06501022	1	CYLINDER, 4" X 20"
16	06501023	1	CYLINDER,3” X 18”
17	06537021	6	ROLL PIN,5MM
18	TB1033	1	PIN,1” X 4”
19	TB1036	1	PIN,1” X 4-11/16”
20	TF1143	1	PIN,LYNCH
21	21688	2	CAPSCREW,7/16” X 3-1/4”,NC
22	21677	2	NYLOCK NUT,7/16”,NC
23	6T3210	1	GREASE ZERK,1/8” X 90º
24	TB1025	1	PIN,1-1/2” X 12”
25	30172	1	CLEVIS,SPHERICAL
26	6T3014	2	ROLL PIN, 1/4" X 2"
27	TB1045B	2	PIN, PRIMARY CYLINDER

©2015 Alamo Group Inc.

BOOM ASSY HYD BENGAL 24 T4

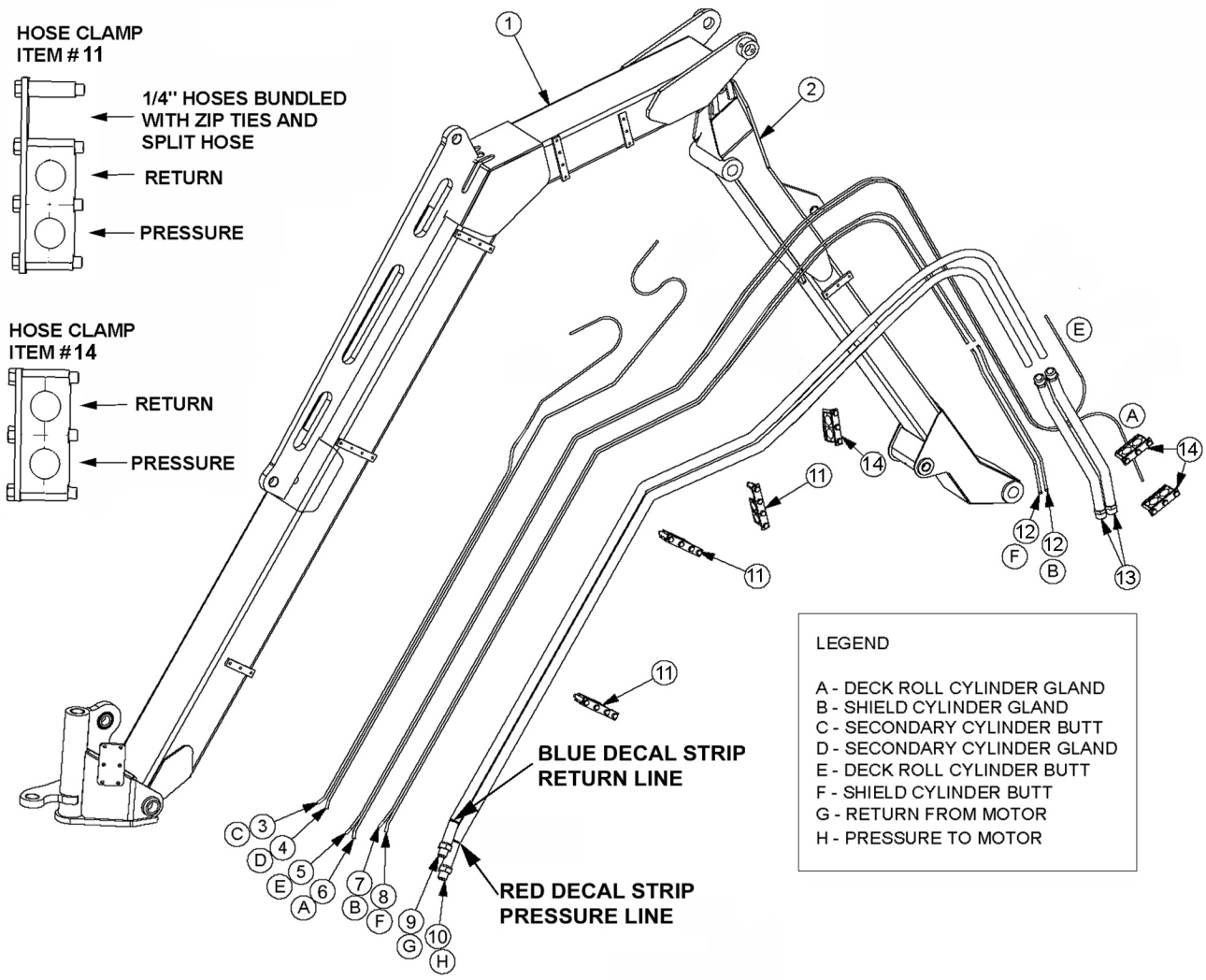

COMMON BENGAL T4

Continued...

ITEM	PART NO.	QTY.	DESCRIPTION
1	------	-	MAIN BOOM *REFER TO BOOM ARM ASSY
2	------	-	SECONDARY BOOM *REFER TO BOOM ARM ASSY
3	06500716	1	HOSE, 1/4" X 100"
4	---	1	HOSE, 1/4" X 100 "
5	06500717	1	HOSE, 1/4" X 170"
6	----	1	HOSE, 1/4" X 170"
7	06500718	1	HOSE, 1/4" X 130"
8	---	1	HOSE, 1/4" X 130"
9	06500715	1	HOSE, 1" X 198"
10	---	1	HOSE, 1" X 198"
11	06505019	3	CLAMP KIT,3 SECTION
12	34103	2	TUBE,PRFRMD,SEC BOOM
13	30169	2	TUBE,PRFRMD,SEC BOOM,HP
14	30111	2	CLAMP KIT,2 SECTION

©2015 Alamo Group Inc.

BOOMREST - OPEN STOW

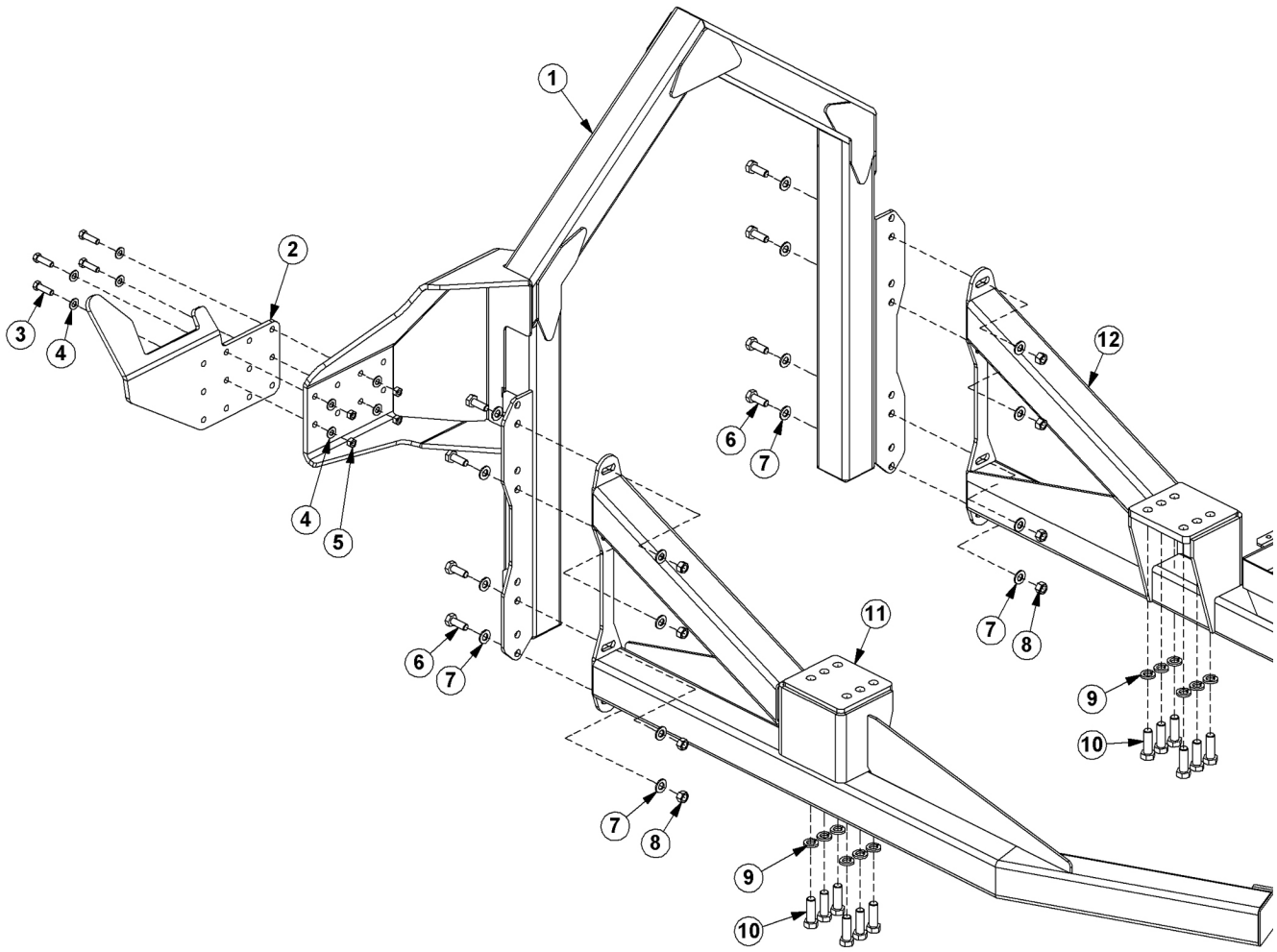

COMMON BENGAL T4

Continued...

ITEM	PART NO.	QTY.	DESCRIPTION
1	06310157	1	BOOMREST,OS
2	06410968	1	SADDLE
3	21732	4	CAPSCREW,1/2" X 1-3/4",NC
4	06533004	8	FLATWASHER,1/2",SAE
5	21725	4	HEX NUT,1/2",NC
6	21782	8	CAPSCREW,5/8" X 1-3/4",NC
7	33764	16	FLATWASHER,5/8",SAE
8	21775	8	HEX NUT,5/8",NC
9	24881	12	LOCKWASHER,20MM
10	27281	12	CAPSCREW,20MM X 60MM,2.5P
11	---	1	AXLE BRACE,RH
12	----	1	AXLE BRACE,LH

©2015 Alamo Group Inc.

50IN ROTARY MOWER ASSEMBLY

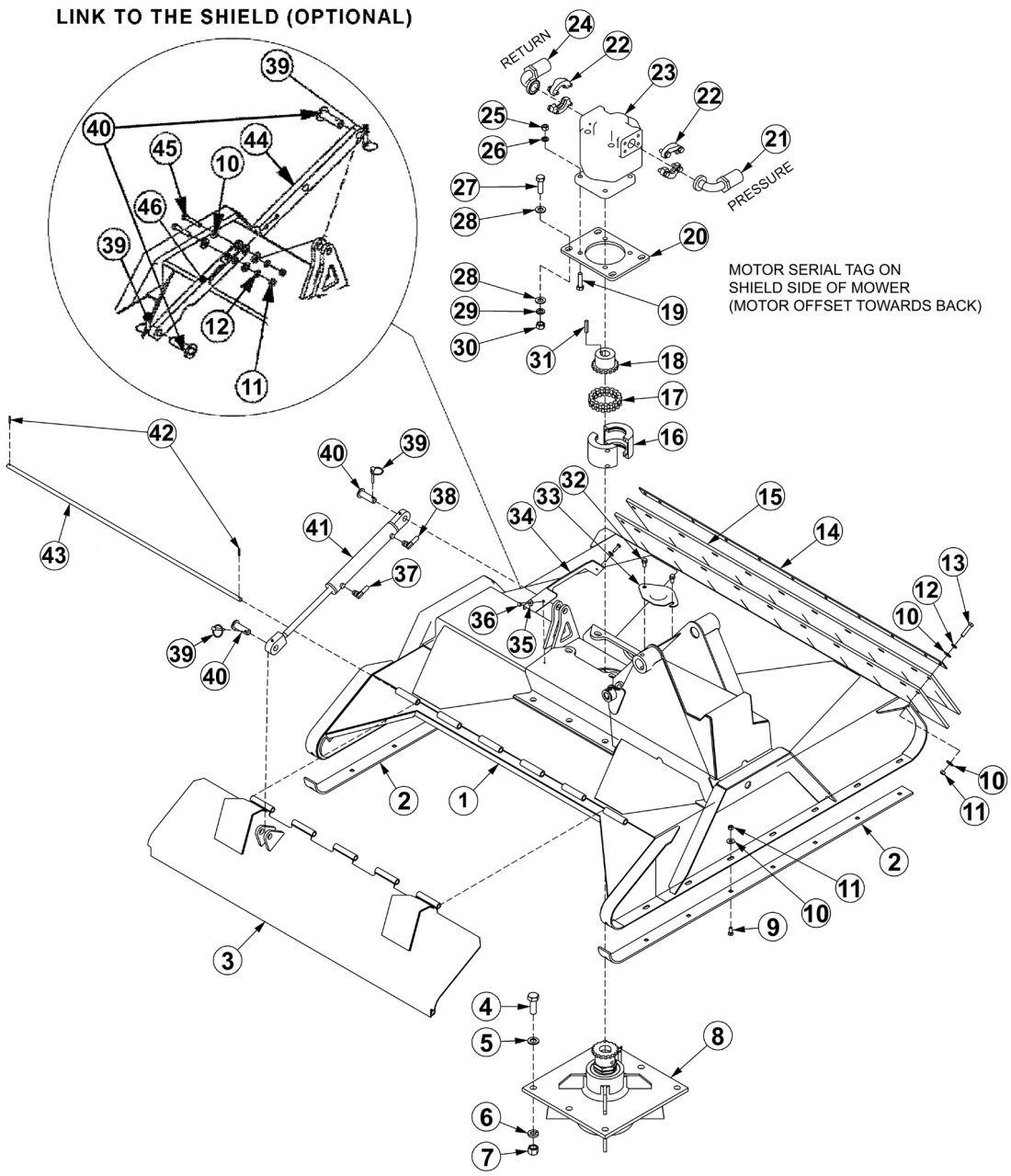

ITEM	PART NO.	QTY.	DESCRIPTION
1	33780	1	DECK,WLDMNT,50" RTRY
2	33777	2	SKID SHOE,50" RTRY
3	33754	1	SHIELD,50"RTRY
4	33879	6	CAPSCREW, 3/4 X 2 1/4,NF GR 8
5	33880	6	FLATWASHER,3/4",GR 8,SAE
6	21993	6	LOCKWASHER,3/4",GR 8
7	6T2413	6	HEX NUT,3/4,NF,GR 8
8	6T1024H5	1	SPINDLE ASSY,CPLT,HD,5/8 HOLES

COMMON BENGAL T4

Continued...

ITEM	PART NO.	QTY.	DESCRIPTION
9	6T2270	16	PLOW BOLT,3/8" X 1" NC
10	22016	33	FLATWASHER,3/8"
11	21625	20	HEX NUT,3/8",NC
12	21988	11	LOCKWASHER, 3/8"
13	21633	11	CAPSCREW, 3/8 X 1 3/4,NC
14	33774	1	FLAP RETAINER,50" RTRY
15	33775	2	FLAP,50" RTRY
16	6T1033	1	COUPLER COVER
17	6T1029	1	COUPLER CHAIN
18	21223	1	SPROCKET
19	21733	4	CAPSCREW, 1/2 X 2,NC
20	33776	1	MOTOR MOUNT,PLATE,50" RTRY
21	24490	1	HOSE - PRESSURE
---	06500155	1	HOSE- PRESSURE (LRS ONLY)
22	TF4852	2	FLANGE KIT - #20
23	06504012	1	MOTOR
24	24489	1	HOSE - RETURN
---	06500154	1	HOSE-RETURN (LRS ONLY)
25	21725	4	HEX NUT, 1/2" NC
26	06533004	4	FLATWASHER, 1/2"
27	6T2290	4	CAPSCREW,5/8X2,NF GR 8
28	33764	8	FLATWASHER,5/8",GR 8,SAE
29	21992	4	LOCKWASHER, 5/8
30	6T2408	4	HEX NUT, 5/8, NF
31	TF1124	1	SQUARE KEY
32	33881	2	CAPSCREW,FLG, 3/8 X 3/4,NC
33	33779	1	PLATE,COVER,KNF HOLE
34	06410439	1	COVER
35	22014	2	FLATWASHER,1/4
36	21530	2	CAPSCREW,1/4 X 1,NC
37	34187	1	HOSE 1/4” X 75”
38	34186	1	HOSE 1/4” X 66”
39	RD1032	2	LYNCH PIN
40	33984	2	PIN,SHIELD,50"
41	33785	1	1-1/2” X 8”, CYLINDER, WELDED
42	6T3017	2	ROLLPIN
43	33778	1	HINGE PIN,50" RTRY
44	33772	1	LINK, SHIELD 50” RTRY
45	21634	2	CAPSCREW, 3/8” X 2, NC
46	33773	1	LINK 2, SHIELD 50” RTRY

©2015 Alamo Group Inc.

50IN ROTARY KNIVES AND DISH

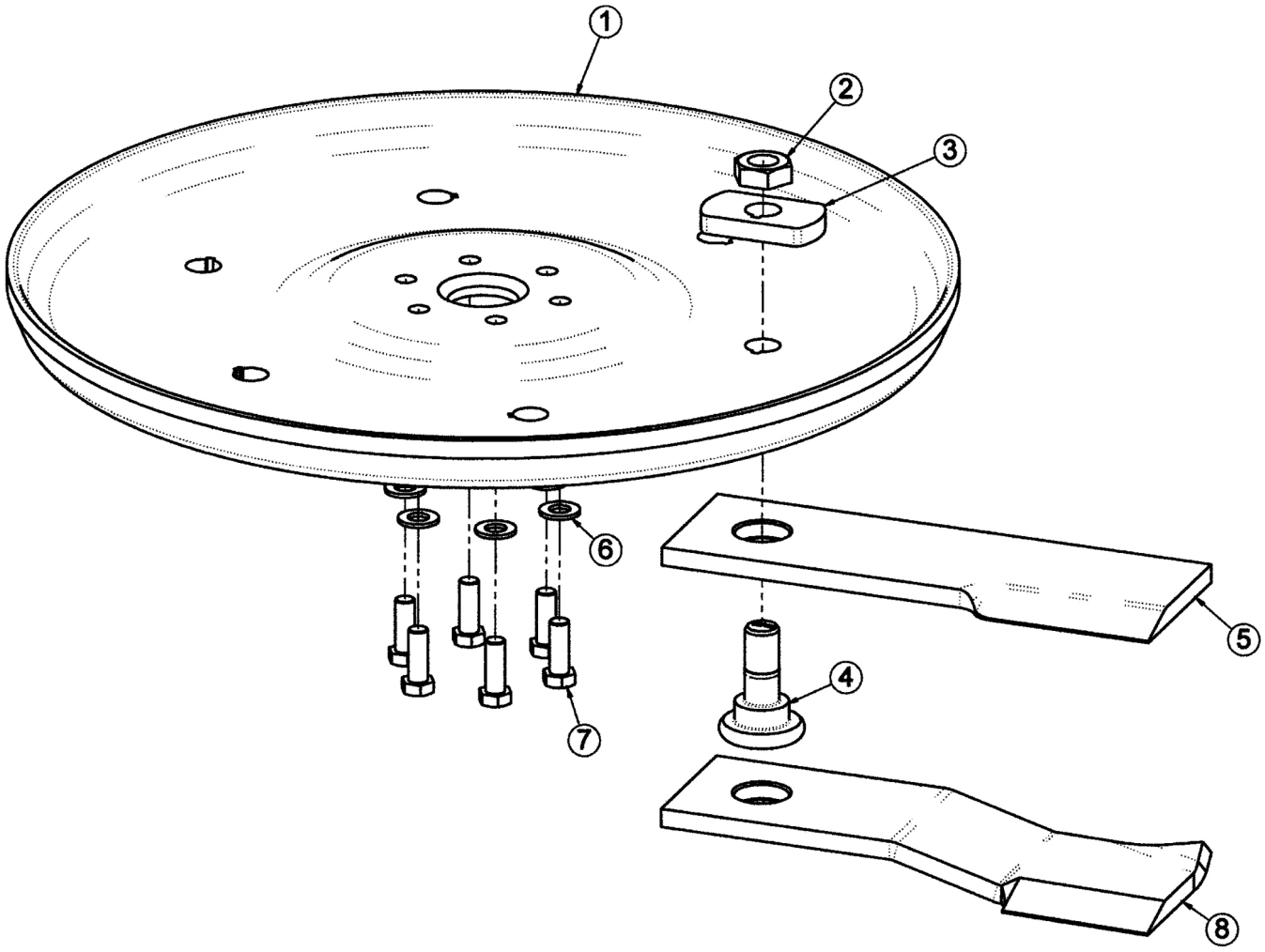

ITEM	PART NO.	QTY.	DESCRIPTION
------	06700089	-	KIT,TRB50,DISK,W/BOLT KIT (INCLUDES ITEMS 1,3 & 7)
1	06770003	1	BLADE MOUNTING DISK
2	6T1023R	2	NYLOCK HEX NUT 1 1/8”
3	34878	2	SPACER
4	06538000	2	KNIFE MOUNTING BOLT
5	06521001	2	STANDARD KNIFE
6	33764	6	FLATWASHER
7	6T2259	6	CAPSCREW
------	06770012	-	BOLT KIT (INCLUDES ITEMS 6, 7 & LOCTITE)
8	06521002	2	GRASS KNIFE (OPTIONAL)
------	6T1825	-	LOCTITE - USED ON ALL DISK MOUNTING BOLTS

COMMON BENGAL T4

©2015 Alamo Group Inc.

50IN ROTARY BLADE BAR AND KNIVES

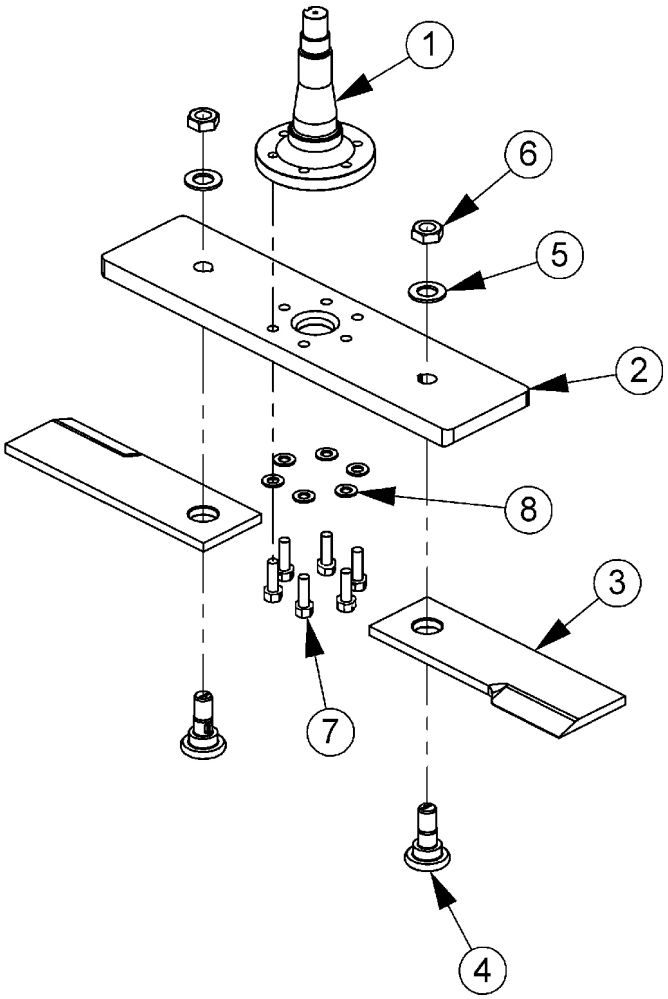

ITEM	PART NO.	QTY.	DESCRIPTION
1	PT1018H5	1	SPINDLE,5/8HOLES,HD,WO/TABS
2	06400388	1	BAR,BLADE,TRB
3	06521001	2	KNIFE,TRB50,5/8
4	06538000	2	KNIFE MTG BOLT,5/8 SHOULDER
5	06533002	2	FLATWASHER,1 1/8,GR 8
6	6T1023R	2	KNIFE MTG NUT,1 1/8,NF,GR8
7	6T2259	6	CAPSCREW,5/8X1-3/4,NF,GR8
8	33764	6	FLATWASHER,5/8,GR 8,SAE

COMMON BENGAL T4

©2015 Alamo Group Inc.

60IN ROTARY MOWER ASSEMBLY

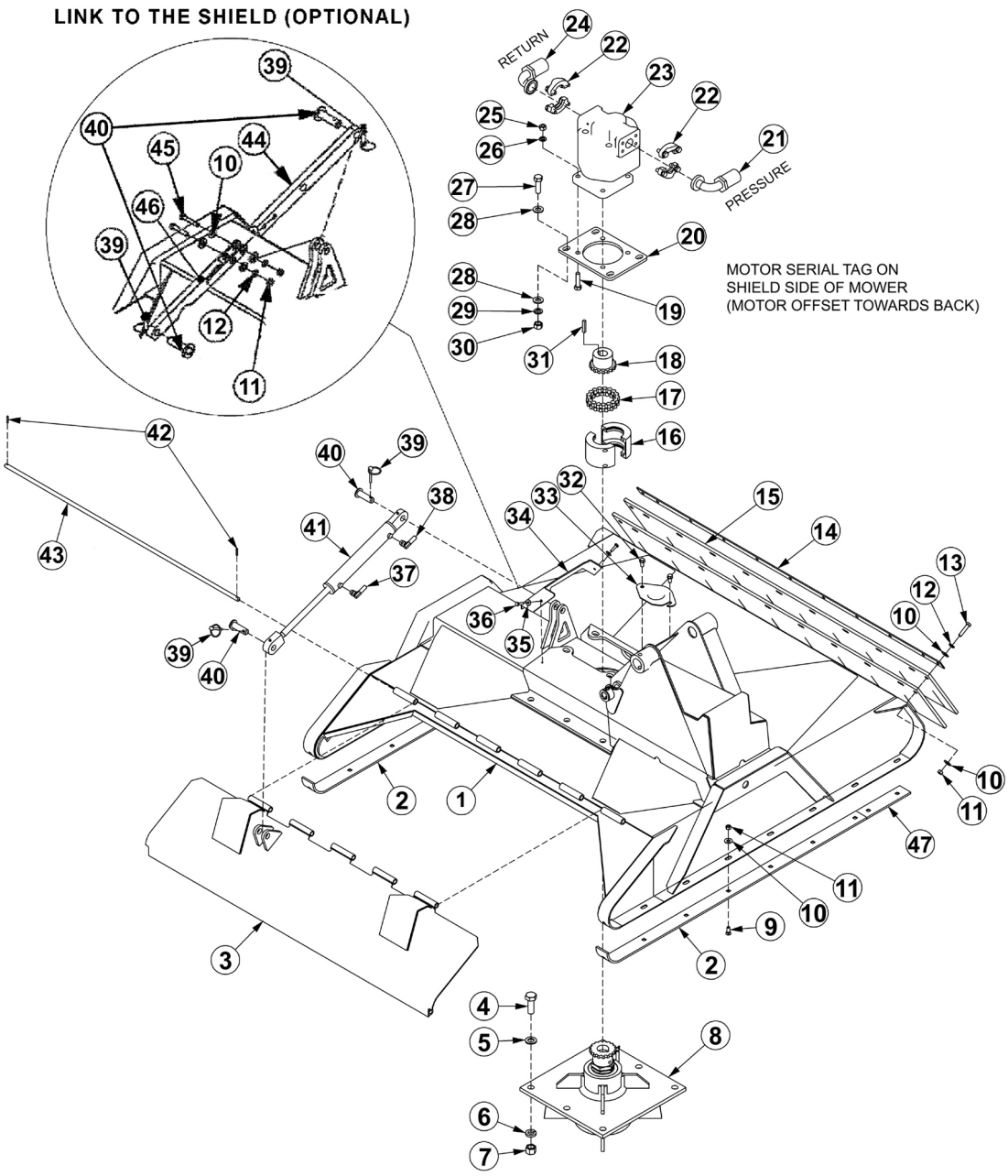

ITEM	PART NO.	QTY.	DESCRIPTION
1	06320159	1	DECK,WLDMNT,60" RTRY
2	33777	2	SKID SHOE,RTRY
3	06320162	1	SHIELD,60"RTRY
4	33879	6	CAPSCREW, 3/4 X 2 1/4,NF GR 8
5	33880	6	FLATWASHER,3/4",GR 8,SAE
6	21993	6	LOCKWASHER,3/4",GR 8
7	6T2413	6	HEX NUT,3/4,NF,GR 8
8	6T1024H5	1	SPINDLE ASSY,CPLT,HD,5/8 HOLES

COMMON BENGAL T4

Continued...

ITEM	PART NO.	QTY.	DESCRIPTION
9	6T2270	16	PLOW BOLT,3/8" X 1" NC
10	22016	33	FLATWASHER,3/8"
11	21625	20	HEX NUT,3/8",NC
12	21988	11	LOCKWASHER, 3/8"
13	21633	11	CAPSCREW, 3/8 X 1 3/4,NC
14	6T0823	1	FLAP RETAINER,60" RTRY
15	06520238	2	FLAP,60" RTRY
16	6T1033	1	COUPLER COVER
17	6T1029	1	COUPLER CHAIN
18	21223	1	SPROCKET
19	21733	4	CAPSCREW, 1/2 X 2,NC
20	33776	1	MOTOR MOUNT,PLATE,RTRY
21	24490	1	HOSE - PRESSURE
---	06500155	1	HOSE-PRESSURE (LRS ONLY)
22	TF4852	2	FLANGE KIT - #20
23	6504011	1	MOTOR
24	24489	1	HOSE - RETURN
---	06500154	1	HOSE-RETURN (LRS ONLY)
25	21725	4	HEX NUT, 1/2" NC
26	06533004	4	FLATWASHER, 1/2"
27	6T2290	4	CAPSCREW,5/8X2,NF GR 8
28	33764	8	FLATWASHER,5/8",GR 8,SAE
29	21992	4	LOCKWASHER, 5/8
30	6T2408	4	HEX NUT, 5/8, NF
31	TF1124	1	SQUARE KEY
32	33881	2	CAPSCREW,FLG, 3/8 X 3/4,NC
33	33779	1	PLATE,COVER,KNF HOLE
34	06410439	1	COVER
35	22014	2	FLATWASHER,1/4
36	21530	2	CAPSCREW,1/4 X 1,NC
37	34187	1	HOSE 1/4” X 75”
38	34186	1	HOSE 1/4” X 66”
39	RD1032	2	LYNCH PIN
40	33984	2	PIN,SHIELD
41	33785	1	1-1/2” X 8”, CYLINDER, WELDED
42	6T3017	2	ROLLPIN
43	06420139	1	HINGE PIN,60" RTRY
44	33772	1	LINK, SHIELD,RTRY
45	21634	2	CAPSCREW, 3/8” X 2, NC
46	33773	1	LINK 2, SHIELD,RTRY
47	06401245	2	SKID SHOE,TRB60

©2015 Alamo Group Inc.

60IN ROTARY KNIVES AND DISH

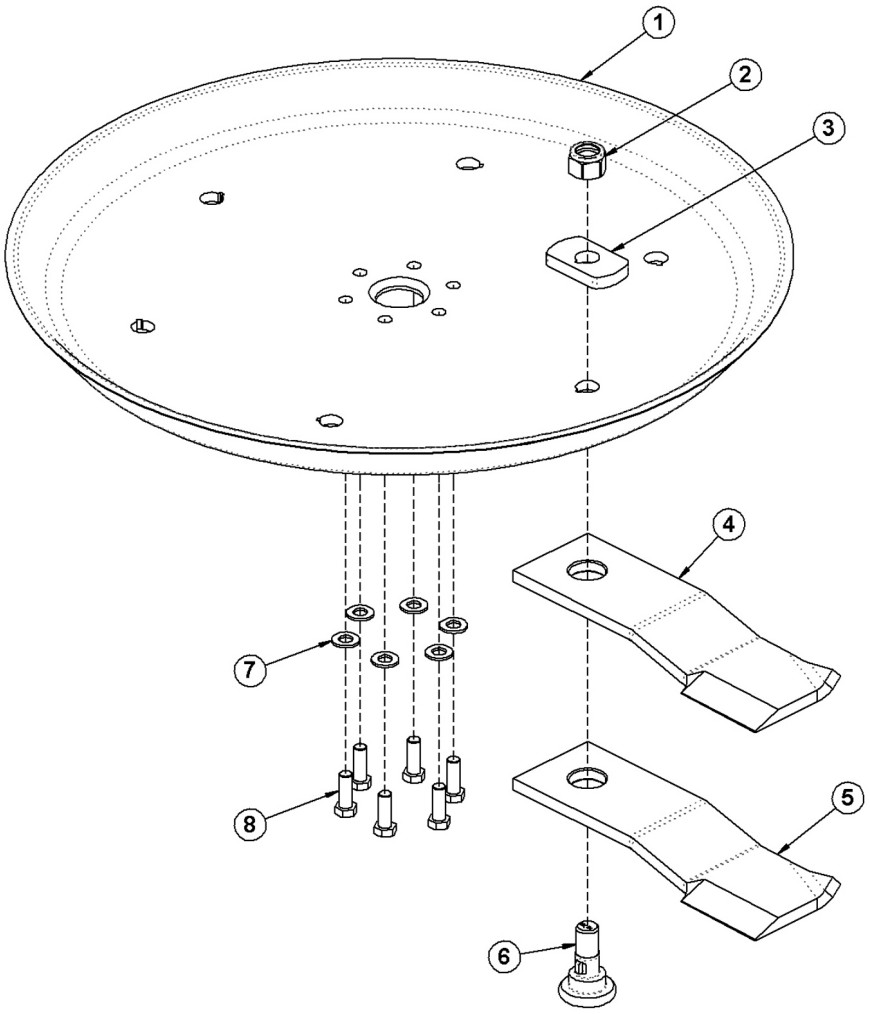

ITEM	PART NO.	QTY.	DESCRIPTION
1	34876	1	BLADE MOUNTING DISH,60"
2	6T1023R	2	NYLOCK NUT,1-1/8",NF
3	34878	2	SPACER
4	34684	2	STANDARD GRASS KNIFE
5	34685	2	HIGH SUCTION GRASS KNIFE (OPTIONAL)
6	34497	2	KNIFE MOUNTING BOLT
7	25270	6	FLATWASHER,5/8",GR8,USS
8	6T2259	6	CAPSCREW,5/8" X 1-3/4",NF,GR8
---	6T1825	1	LOCKTITE (USED ON ITEM 8)
----	27167	1	BOLT KIT (ITEMS 7 & 8)
---	33893	1	KNIFE KIT (ITEMS 2,4 & 6)

COMMON BENGAL T4

©2015 Alamo Group Inc.

60IN ROTARY BLADE BAR AND KNIVES

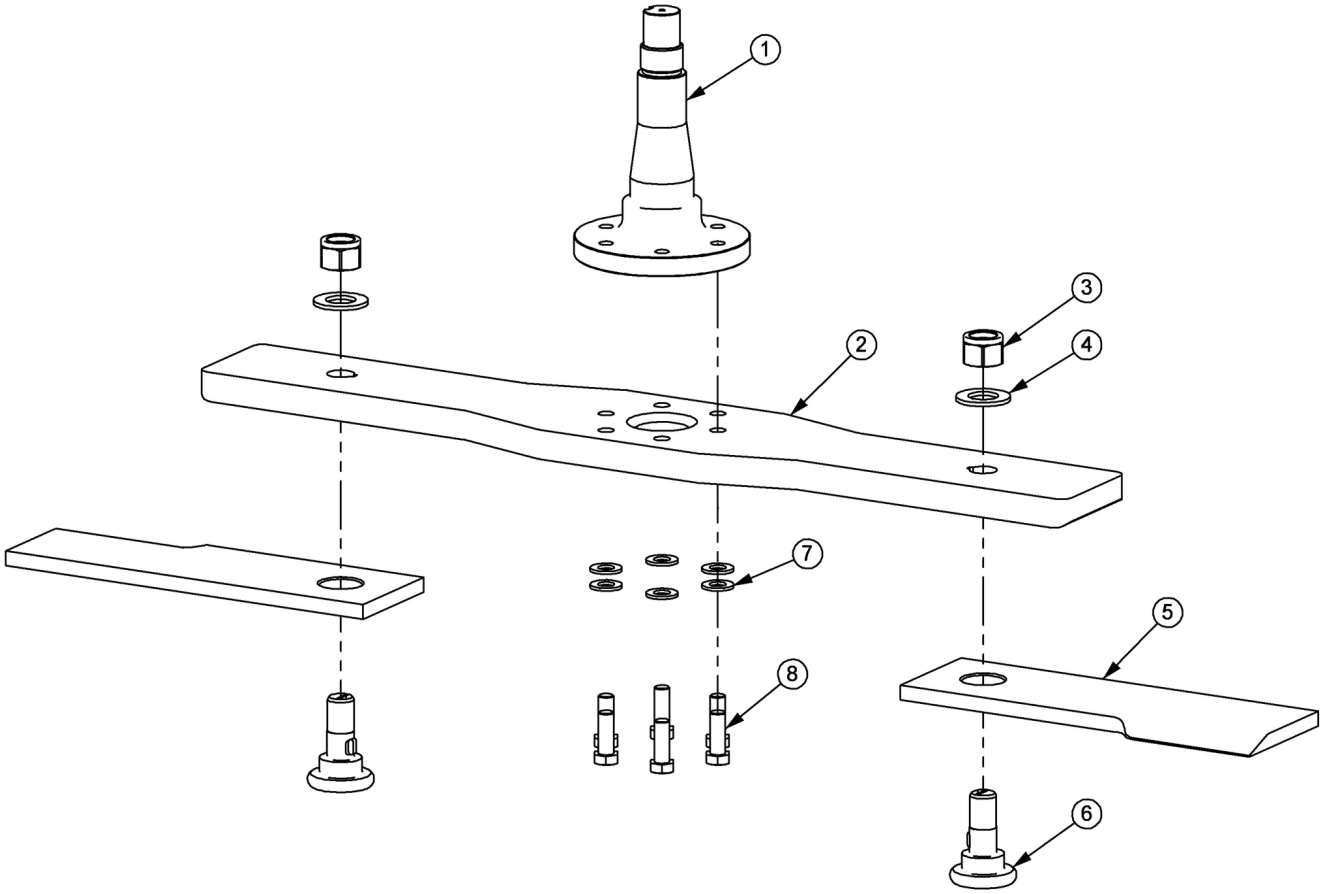

ITEM	PART NO.	QTY.	DESCRIPTION
1	PT1018H5	1	SPINDLE
2	06400690	1	BAR,BLADE,RTRY60
3	6T1023R	2	KNIFE MTG NUT,1-1/8,NYLOCK,NF
4	06533002	2	FLATWASHER,1-1/8,GR8
5	06521001	2	KNIFE,TRB50,5/8
6	06538000	2	KNIFE MTG BOLT,5/8 SHOULDER
7	33764	6	FLATWASHER,5/8,GR 8,SAE
8	6T2259	6	CAPSCREW,5/8 X 1-3/4,NF,GR8

COMMON BENGAL T4

©2015 Alamo Group Inc.

ROTARY MOWER SPINDLE ASSEMBLY

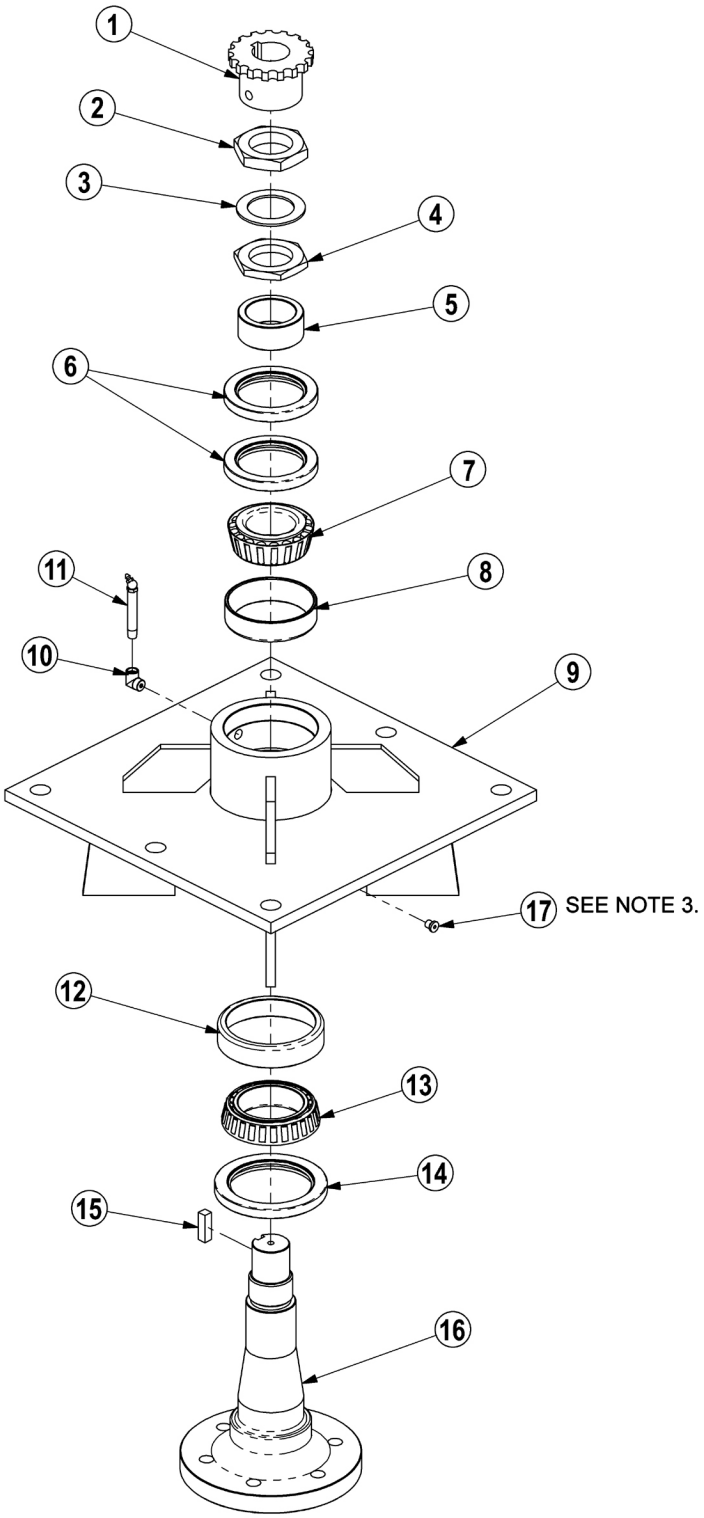

NOTES:
1. FREEPLAY: .001" - .003"
2. GREASE: FILL WITH MOBILITH SHC 220.
3. APPLY LOCTITE "271" TO O-RING PLUG THRDS.

COMMON BENGAL T4

Continued...

ITEM	PART NO.	QTY.	DESCRIPTION
------	6T1024H5	-	SPINDLE ASSEMBLY COMPLETE
1	6T1031	1	SPROCKET
2	6T1016	1	BEARING LOCK NUT - THICK
3	22596	1	JAM WASHER
4	6T1015	1	BEARING ADJUSTMENT NUT - THIN
5	6T1014	1	BEARING ADJUSTMENT SLEEVE
6	6T1011	1	UPPER SEAL - SET OF 2
7	6T1012	1	BEARING CONE
8	6T1013	1	BEARING CUP
9	6T1010H	1	SPINDLE HOUSING
10	30570	1	FITTING STREET ELBOW
11	33990	1	GREASE ZERK
12	6T1013H	1	BEARING CUP
13	6T1012H	1	BEARING CONE
14	6T1011H	1	LOWER SEAL
15	6T1019	1	SPINDLE KEY
16	PT1018H5	1	SPINDLE
17	06503064	1	O-RING PLUG, 1/8”
------	31771	-	SPINDLE REBUILD KIT (INCLUDES ITEMS 2 - 8 AND 12 - 15)

©2015 Alamo Group Inc.

BOOM ROTARY PIVOT ASSEMBLY

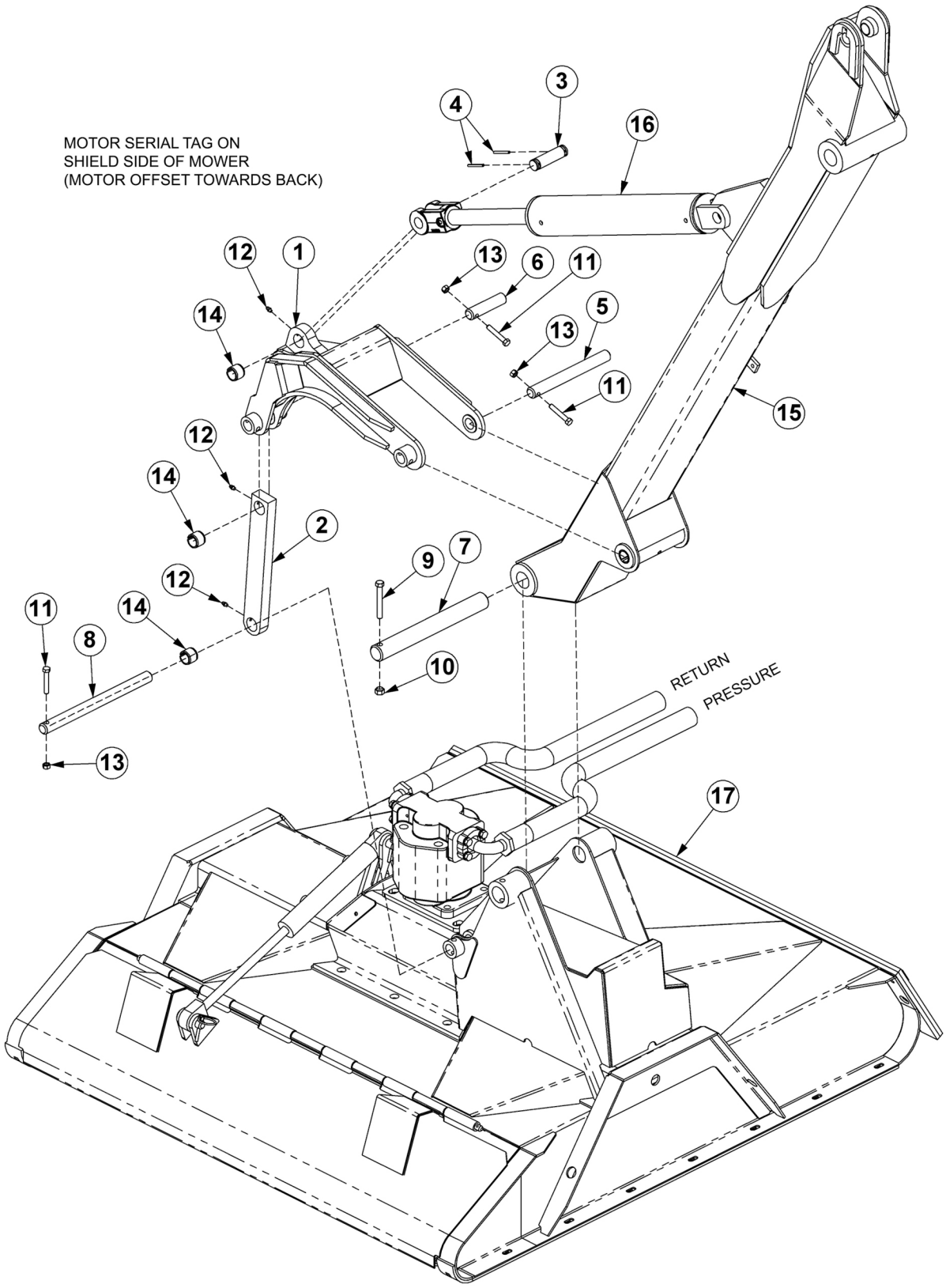

COMMON BENGAL T4

BOOM ROTARY PIVOT ASSEMBLY

Continued...

ITEM	PART NO.	QTY.	DESCRIPTION
1	TB1032	1	ROTARY PIVOT ASSY
2	TB1028	1	PIVOT ARM ASSY
3	TB1033	1	PIN,CLEVIS
4	06537021	2	ROLL PIN
5	TF3097	1	PIN
6	TB1030	1	PIN
7	33985	1	PIN
8	33986	1	PIN
9	21688	1	CAPSCREW,7/16 X 3-1/4,NC
10	21677	1	NYLOCK NUT,7/16 NC
11	21635	3	CAPSCREW,3/8 X 2-1/4
12	6T3207	3	GREASE ZERK
13	21627	3	NYLOCK NUT,3/8,NC
14	TB3010	3	BUSHING
15	------	-	SECONDARY BOOM *REFER TO BOOM ARM ASSY
16	------	-	CYLINDER *REFER TO BOOM ARM ASSY
17	------	-	ROTARY MOWER HEAD *REFER TO ROTARY DECK

©2015 Alamo Group Inc.

50IN FLAIL DRIVE ASSEMBLY

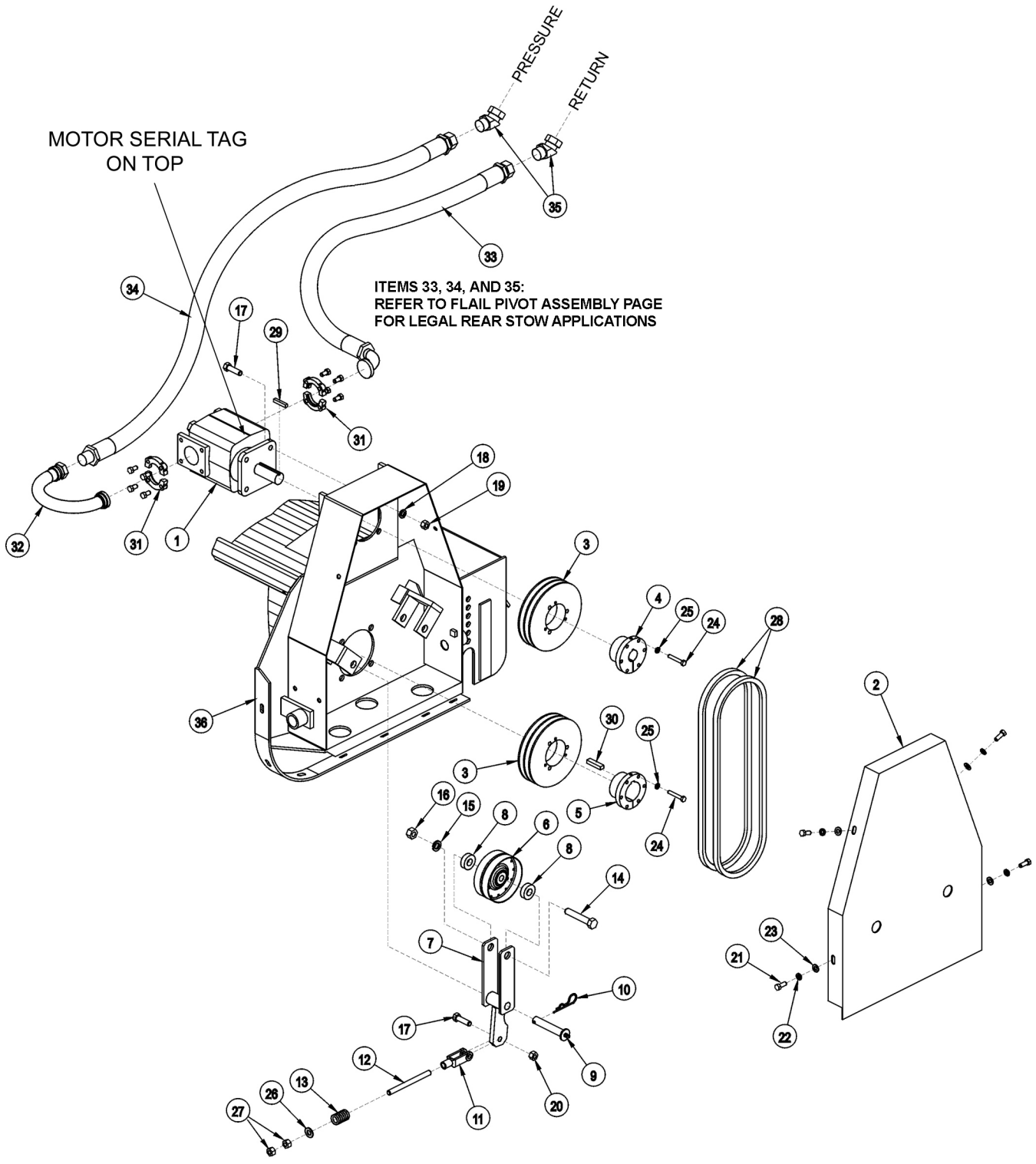

COMMON BENGAL T4

Continued...

ITEM	PART NO.	QTY.	DESCRIPTION
1	06504132	1	MOTOR (M350-1 3/4" GEAR)
2	TF3006	1	BELT GUARD
3	TF3043	2	SHEAVE
4	TF3013	1	BUSHING
5	TF3011	1	BUSHING
6	TF3034	1	IDLER PULLEY
7	TF3205	1	IDLER ARM
8	TF3206	2	IDLER PULLEY SPACER
9	TF3605	1	IDLER ARM PIN WITH ZERK
10	6T3004	1	R - CLIP
11	PT3611A	1	CLEVIS
12	32481	1	THREADED ROD
13	TF3620	1	COMPRESSION SPRING
14	21789	1	CAPSCREW 5/8” X 3 1/2”
15	21992	1	LOCKWASHER 5/8”
16	21775	1	HEX NUT 5/8”
17	21732	5	CAPSCREW 1/2” X 1 3/4”
18	21990	4	LOCKWASHER 1/2”
19	21725	4	HEX NUT 1/2”
20	6T2418	1	LOCK NUT 1/2”
21	21630	4	CAPSCREW 3/8” X 1”
22	21988	4	LOCKWASHER 3/8”
23	22016	4	FLATWASHER 3/8”
24	21584	6	CAPSCREW 5/16” X 2”
25	21987	6	LOCKWASHER 5/16”
26	27938	1	FLATWASHER 1/2”
27	21700	2	HEX NUT 1/2” NF
28	TF3021	2	BELT
29	TF1125	1	SQUARE KEY
30	TF1025	1	SQUARE KEY MOTOR
31	TF4852	2	FLANGE KIT
32	34227	1	PREFORMED TUBE
33	31218	1	HOSE - RETURN
34	34331	1	HOSE - PRESSURE
35	24724	2	SWIVEL FITTING
36	------	-	CUTTER HEAD *REFER TO CUTTER HEAD ASSY

©2015 Alamo Group Inc.

50IN FLAIL MOWER ASSEMBLY

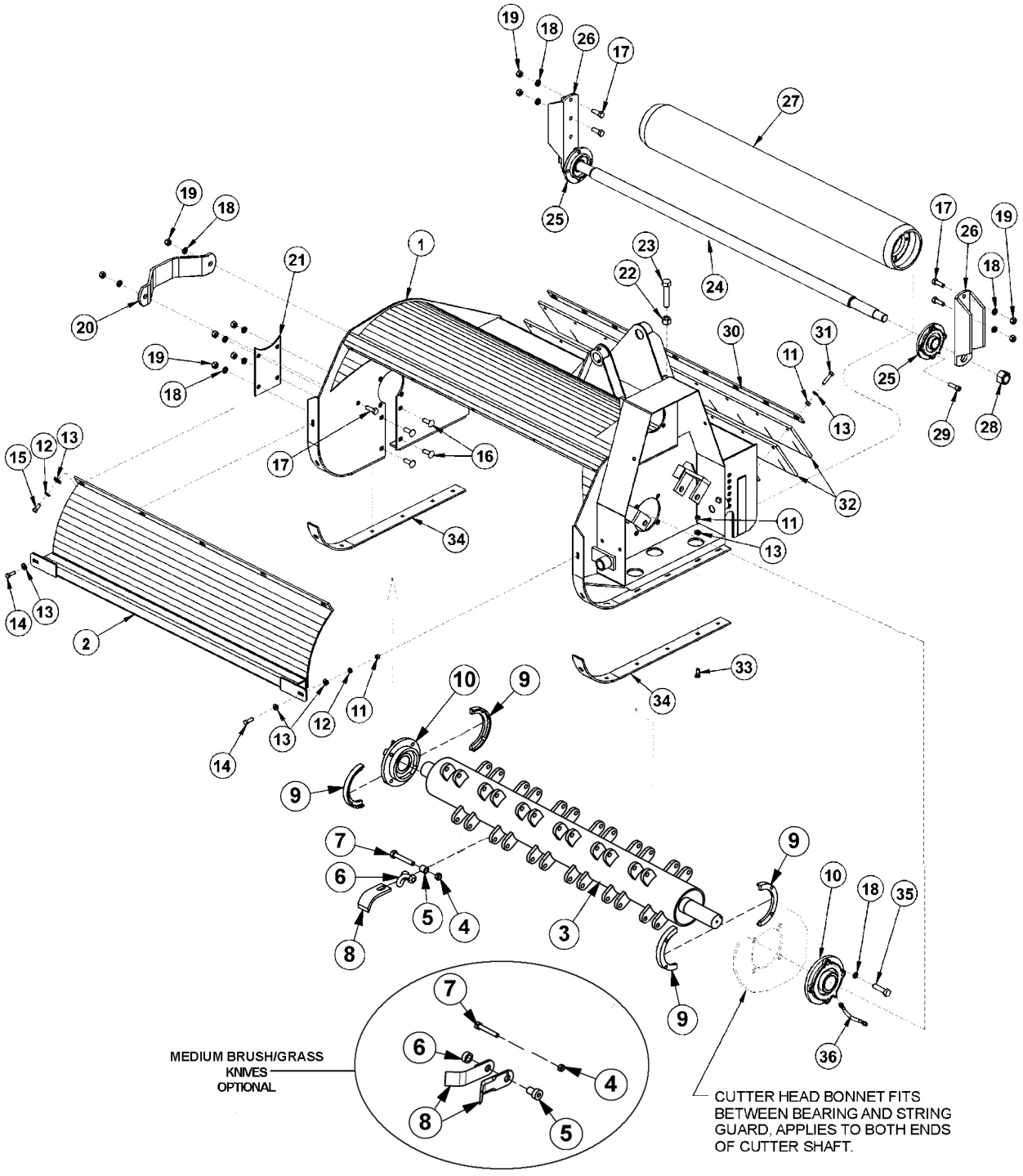

ITEM	PART NO.	QTY.	DESCRIPTION
---	34787	1	FLAIL,BOOM,50,BRUSH,CPLT ASSY (LIGHT BRUSH/GRASS)
	06742133	1	FLAIL,BOOM,50,MD GRASS,CPLT ASSY (MEDIUM BRUSH/GRASS)
1	TF3003F	1	CUTTER HEAD BONNET
2	TF3004	1	FRONT SHIELD

COMMON BENGAL T4

Continued...

ITEM	PART NO.	QTY.	DESCRIPTION
3	34783	1	TBF50 (LIGHT BRUSH/GRASS KNIFE ASSY)
----	06700115	1	TBF50 (MEDIUM BRUSH/GRASS KNIFE ASSY)
4	6T2419	24	HEX NUT,9/16",NC,STOVER
5	06420182	24	BUSHING
6	34782	24	CLEVIS (LIGHT BRUSH/GRASS KNIVES)
----	06420183	24	SPACER (MEDIUM BRUSH/GRASS KNIVES)
7	34786	24	CAPSCREW,9/16" X 3-1/2",NC
8	34780	24	KNIFE (LIGHT BRUSH/GRASS CUTTING)
----	06521007	48	KNIFE (MEDIUM BRUSH/GRASS CUTTING)
9	31204	2	STRING GUARD SET (2 PIECES PER SET)
10	TF1018	2	FLANGE BEARING,2-3/16"
11	21625	23	HEX NUT,3/8",NC
12	21988	7	LOCKWASHER,3/8"
13	22016	30	FLATWASHER,3/8"
14	21631	2	CAPSCREW,3/8" X 1-1/4",NC
15	21630	5	CAPSCREW,3/8" X 1",NC
16	6T7031D	4	PLOW BOLT,1/2" X 1-1/2",NC
17	21731	6	CAPSCREW,1/2" X 1-1/2",NC
18	21990	18	LOCKWASHER,1/2"
19	21725	10	HEX NUT,1/2",NC
20	TF1040	1	CUTTER SHAFT GUARD
21	TF3007A	1	COVER PLATE
22	21825	1	HEX NUT,5/8",NC
23	21838	1	CAPSCREW,3/4" X 3-1/2",NC
24	TF3406	1	GROUND ROLLER TIE ROD
25	TF1022	2	FLANGE BEARING,1-3/8"
26	TF3407	2	GROUND ROLLER ADJUSTMENT BRACKET
27	TF3405	1	GROUND ROLLER
28	6T1023R	2	NYLOCK NUT,1-1/8",NF
29	6T2330	8	CAPSCREW,7/16" X 1-1/2",SOCKET HEAD
30	TB1008	1	FLAP RETAINING BAR
31	21633	9	CAPSCREW,3/8" X 1-3/4",NC
32	TB1006A	2	DEFLECTOR FLAP
33	6T2270	12	PLOWBOLT,3/8" X 1",NC
34	TF3001	2	SKID SHOE
35	06530218	8	CAPSCREW,1/2" X 1-3/4",NC
36	TF1032	1	FLANGE BEARING GREASE HOSE

©2015 Alamo Group Inc.

50IN FLAIL MOWER ASSY, PASS-THROUGH KNIVES

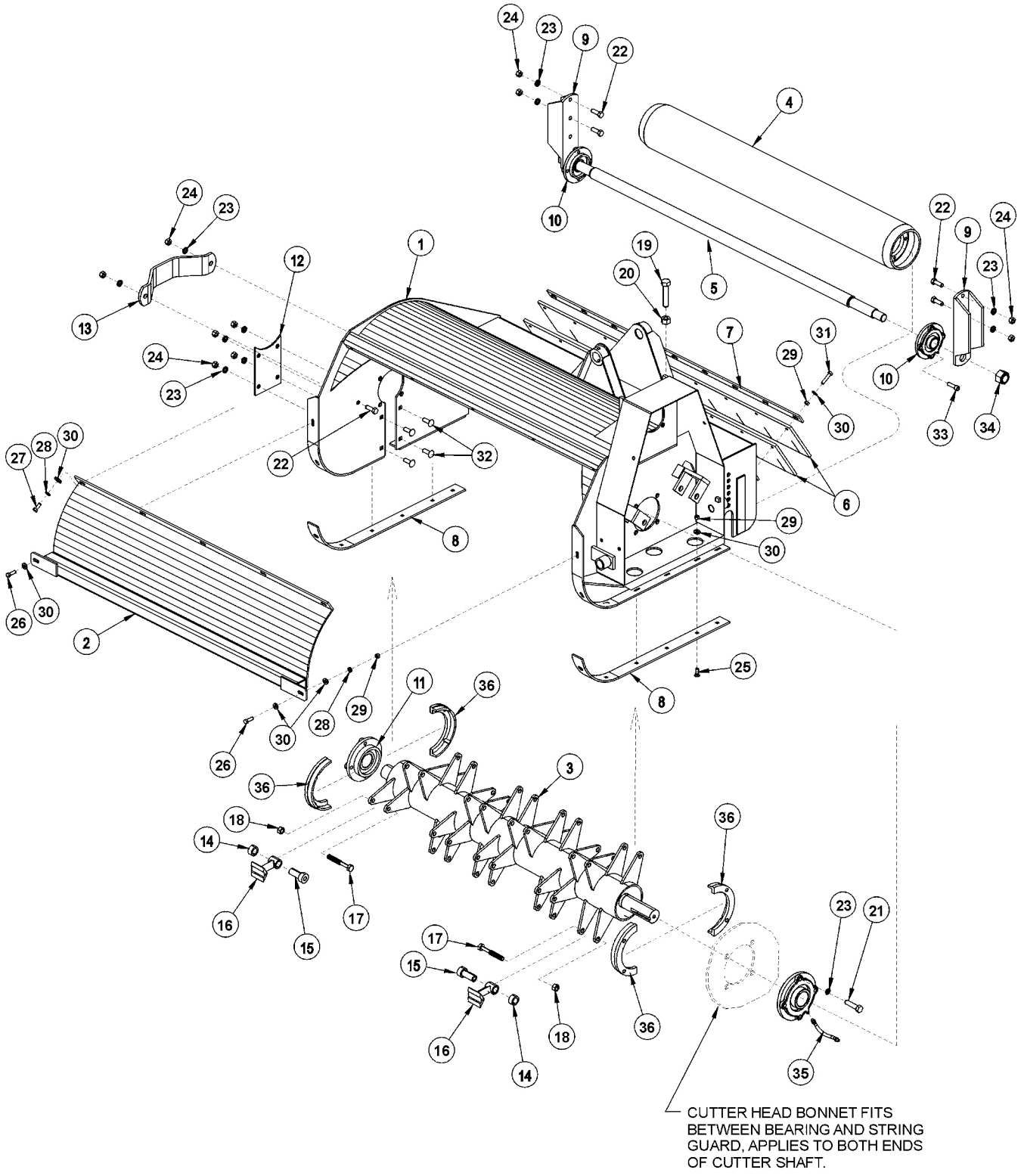

COMMON BENGAL T4

Continued...

ITEM	PART NO.	QTY.	DESCRIPTION
---	34172	1	FLAIL,BOOM,50,CPLT ASSY
1	TF3003F	1	CUTTER HEAD BONNET
2	TF3004	1	FRONT SHIELD
3	33717	1	TBF50,CUTTERSHAFT,PASS THRU KNIVES
4	TF3405	1	GROUND ROLLER
5	TF3406	1	GROUND ROLLER TIE ROD
6	TB1006A	2	DEFLECTOR FLAP
7	TB1008	1	FLAP RETAINING BAR
8	TF3001	2	SKID SHOE
9	TF3407	2	GROUND ROLLER ADJUSTMENT BRACKET
10	TF1022	2	FLANGE BEARING,1-3/8”
11	TF1018	2	FLANGE BEARING,2-3/16”
12	TF3007A	1	COVER PLATE
13	TF1040	1	CUTTER SHAFT GUARD
14	33858	24	SPACER,COLLAR
15	33857	24	SHOULDER,BUSHING
16	46399.01	24	KNIFE,FLAIL,FORGED
17	33854	24	CAPSCREW,5/8" X 4-1/2",NC
18	32674	24	HEX NUT,5/8",NC
19	21838	1	CAPSCREW,3/4” X 3-1/2”,NC
20	21825	1	HEX NUT,5/8”,NC
21	21732	8	CAPSCREW,1/2" X 1-3/4",NC
22	21731	6	CAPSCREW,1/2" X 1-1/2",NC
23	21990	18	LOCKWASHER,1/2”
24	21725	10	HEX NUT,1/2”,NC
25	6T2270	12	PLOWBOLT,3/8” X 1”,NC
26	21631	2	CAPSCREW,3/8” X 1-1/4”,NC
27	21630	5	CAPSCREW,3/8” X 1”,NC
28	21988	7	LOCKWASHER,3/8”
29	21625	23	HEX NUT,3/8”,NC
30	22016	30	FLATWASHER,3/8”
31	21633	9	CAPSCREW,3/8” X 1-3/4”,NC
32	6T7031D	4	PLOW BOLT,1/2” X 1-1/2”,NC
33	6T2330	8	CAPSCREW,7/16” X 1-1/2”,NC,SCKT HD
34	6T1023R	2	NYLOCK NUT,1-1/8”,NF
35	TF1032	1	FLANGE BEARING GREASE HOSE
36	31204	2	STRING GUARD SET (2 PIECES PER SET)

©2015 Alamo Group Inc.

63IN FLAIL DRIVE ASSEMBLY

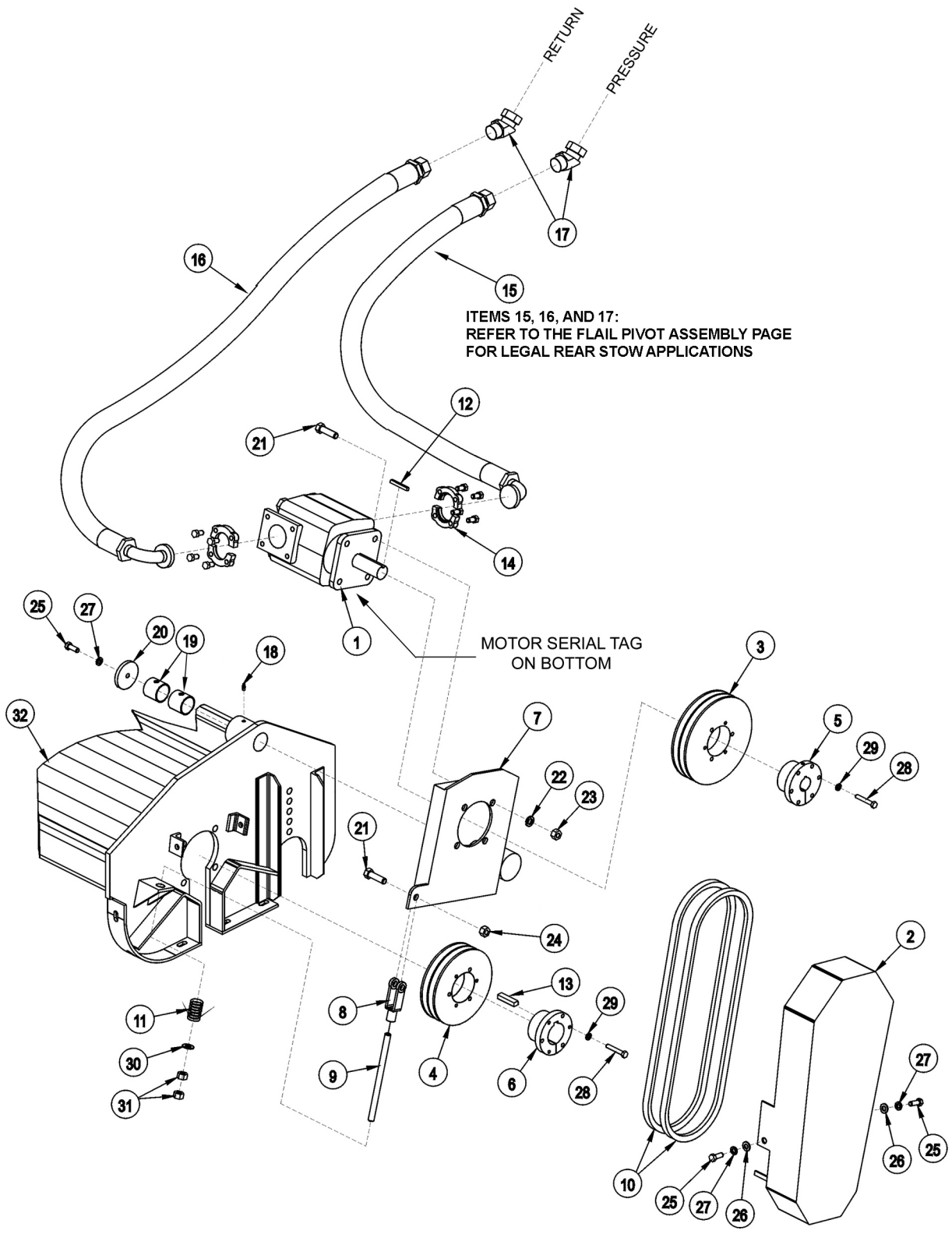

COMMON BENGAL T4

Continued...

ITEM	PART NO.	QTY.	DESCRIPTION
1	06504132	1	MOTOR (M350-1 3/4 GEAR)
2	28703B	1	BELT GUARD
3	TF3044	1	UPPER SHEAVE
4	TF3040	1	LOWER SHEAVE
5	TF3013	1	BUSHING
6	28723	1	BUSHING
7	28679B	1	MOTOR CHANNEL
8	PT3611A	1	CLEVIS
9	40496	1	THREADED ROD
10	28702	2	BELT
11	TF3620A	1	TENSIONER SPRING
12	28572	1	SQUARE KEY
13	26142A	1	SQUARE KEY
14	TF4852	2	FLANGE KIT
15	30308	1	HOSE,1 X 69 - PRESSURE
16	30309	1	HOSE,1 X 78 - RETURN
17	24724	2	SWIVEL FITTING
18	TF1033	1	GREASE ZERK
19	27580	2	BUSHING
20	28682	1	MOTOR CHANNEL WASHER
21	21732	5	CAPSCREW 1/2” X 1 3/4”
22	21990	4	LOCKWASHER 1/2”
23	21725	4	HEX NUT 1/2”
24	6T2418	1	STOVER NUT 1/2”
25	21630	3	CAPSCREW 3/8” X 1”
26	22016	2	FLATWASHER 3/8”
27	21988	3	LOCKWASHER 3/8”
28	21584	6	CAPSCREW 5/16” X 2”
29	21987	6	LOCKWASHER 5/16”
30	27938	1	FLATWASHER 1/2”
31	21700	2	HEX NUT 1/2” NF
32	------	-	CUTTER HEAD *REFER TO MOWER ASSY

©2015 Alamo Group Inc.

63IN FLAIL MOWER ASSEMBLY

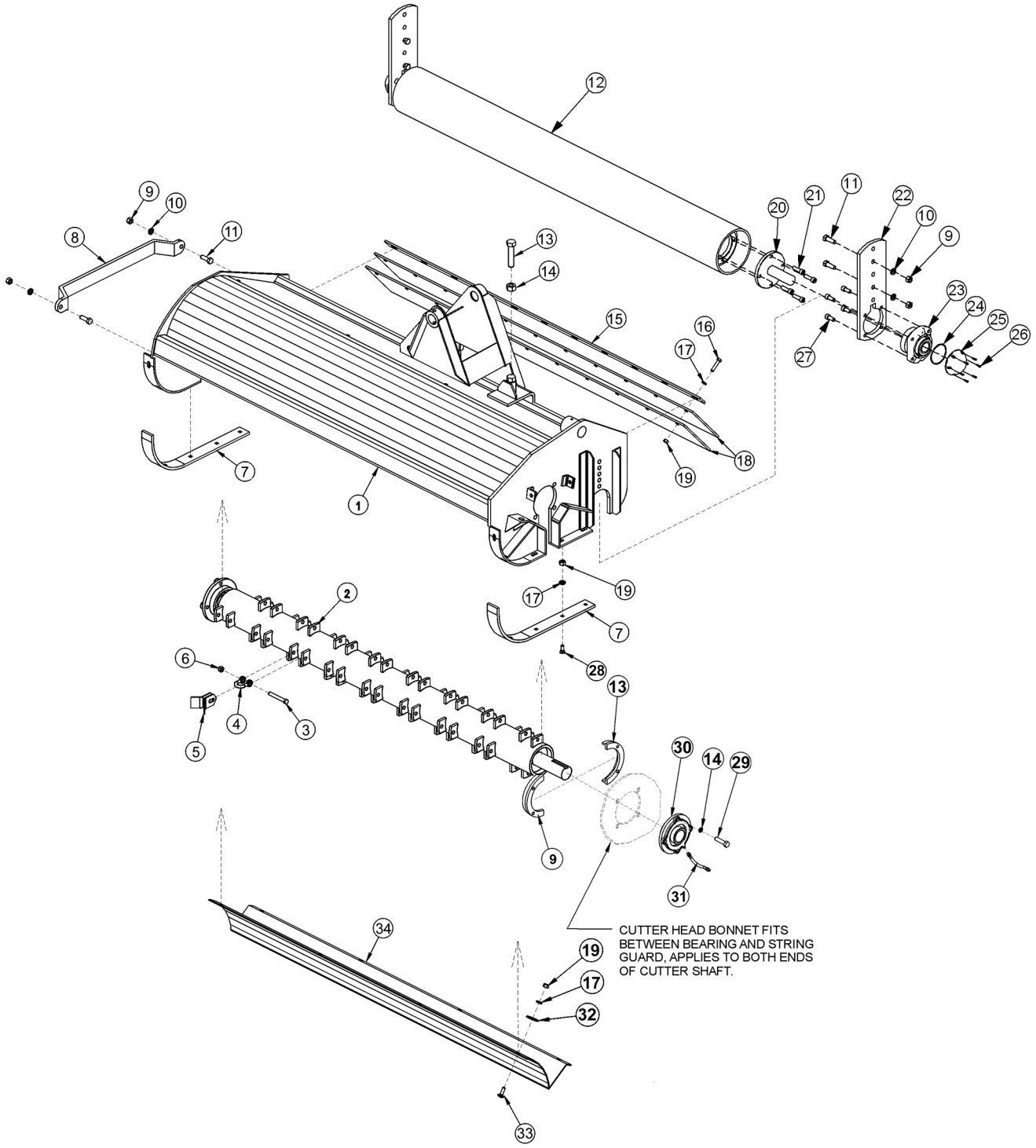

COMMON BENGAL T4

Continued...

ITEM	PART NO.	QTY.	DESCRIPTION
------	06200271	-	FLAIL,BOOM,63,GRASS,CPLT ASSY
1	28659H	1	CUTTER HEAD BONNET
2	28743	-	CUTTER SHAFT / KNIFE ASSY STANDARD GRASS
------	28642C	1	CUTTER SHAFT,63,STD
3	34011	36	FLAIL KNIFE MOUNTING BOLT
4	TF1020	36	FLAIL KNIFE MOUNTING CLEVIS
5	33713	72	FLAIL KNIFE - STANDARD
6	21677	36	NYLOCK NUT
7	28086A	2	SKID SHOE
8	27975A	1	CUTTER SHAFT GUARD
9	21725	14	HEX NUT 1/2”
10	21990	14	LOCKWASHER 1/2”
11	21731	6	CAPSCREW 1/2” X 1 1/2”
12	28650A	1	GROUND ROLLER
13	33863	2	STRING GUARD,STD
14	06533006	8	FLATWASHER,1/2",SAE,L9
15	28700	1	FLAP RETAINING BAR
16	21633	11	CAPSCREW 3/8” X 1 3/4”
17	21988	28	LOCKWASHER 3/8”
18	28701	2	DEFLECTOR FLAP
19	21625	28	HEX NUT 3/8”
20	TF1045B	2	GROUND ROLLER STUB SHAFT
21	6T2330	8	CAPSCREW 7/16” X 1 1/2” SOCKET HEAD
22	28735	2	ADJUSTABLE ROLLER BRACKET
23	06520028	2	BEARING,FLANGE,1-3/8,GRNDRLLR
24	06520029	2	O-RING
25	06520027	2	CAP,BEARING,GROUNDROLLER
26	06530001	12	CAPSCREW,SKT HD,8-32 X 1/2,SS
27	6T2331	8	CAPSCREW 7/16” X 1” SOCKET HEAD
28	6T2270	10	PLOW BOLT 3/8” X 1 1/4”
29	06530217	8	CAPSCREW 1/2” X 2”,L9
30	28683	2	FLANGE BEARING
31	TF1032	1	FLANGE BEARING GREASE HOSE
32	6T2615	7	FENDER WASHER 3/8”
33	6T2283	7	CARRIAGE BOLT 3/8” X 1”
34	28665A	1	BAFFLE (INSIDE UPPER REAR OF CUTTER HEAD)

©2015 Alamo Group Inc.

BOOM FLAIL PIVOT ASSEMBLY

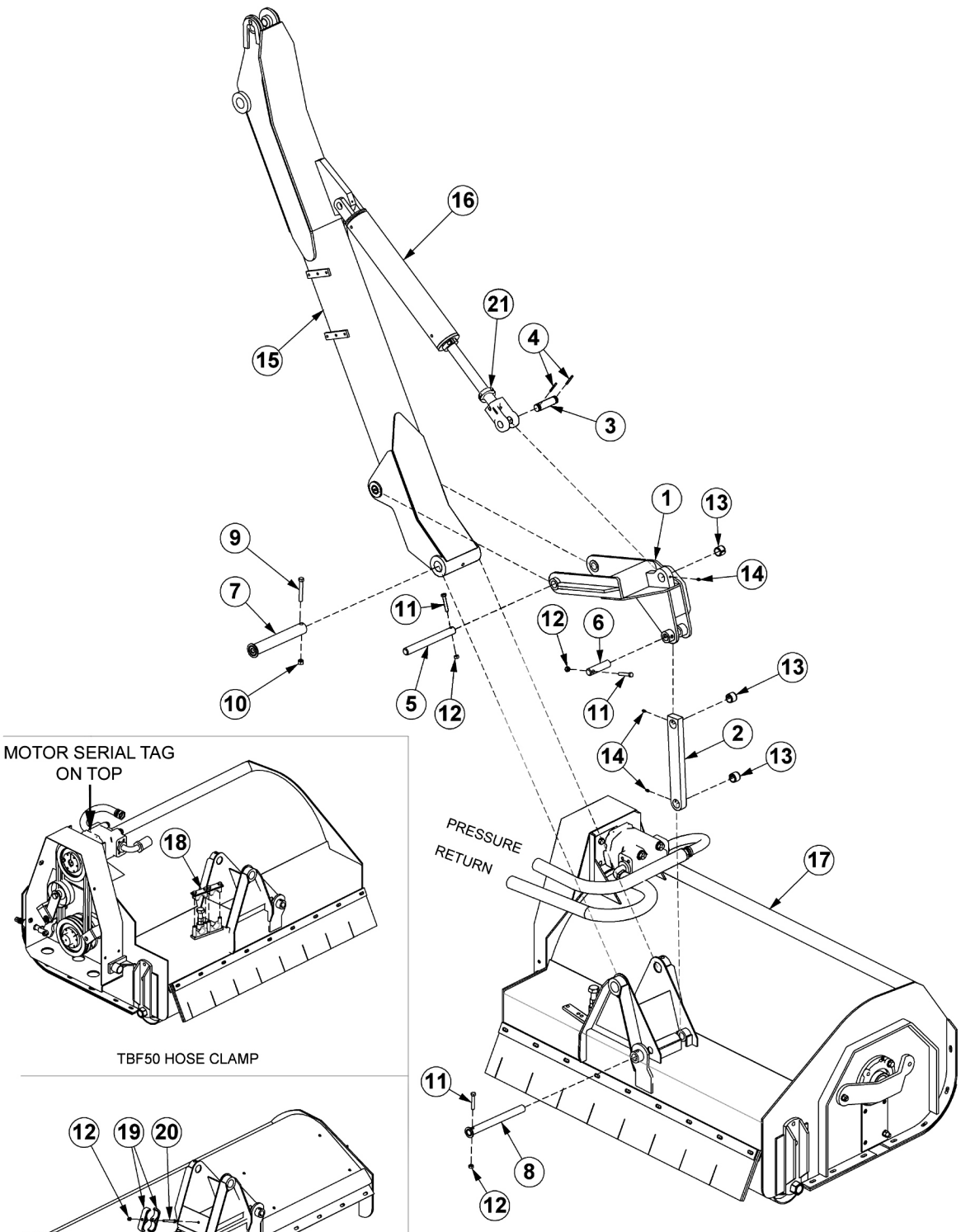

COMMON BENGAL T4

BOOM FLAIL PIVOT ASSEMBLY

Continued...

ITEM	PART NO.	QTY.	DESCRIPTION
1	TF3015	1	FLAIL PIVOT ASSY
2	TB1028	1	PIVOT ARM ASSY
3	TB1033	1	PIN CLEVIS
4	06537021	2	ROLL PIN
5	TF3097	1	PIN
6	TF3090	1	PIN
7	TB1024	1	PIN
8	TB1027	1	PIN
9	21688	1	CAPSCREW 7/16” X 3 1/4”
10	21677	1	NYLOCK NUT 7/16”
11	21635	3	CAPSCREW 3/8” X 2 1/4”
12	21627	4	NYLOCK NUT 3/8”
13	TB3010	3	BUSHING
14	6T3207	3	GREASE ZERK
15	------	-	SECONDARY BOOM *REFER TO BOOM ARM ASSY
16	------	-	CYLINDER - REFER TO BOOM ARM ASSY
17	------	-	FLAIL MOWER HEAD *REFER TO FLAIL ASSY
18	31723	1	CLAMP KIT,TBF50 (USED ON 50” FLAIL)
19	TB3031	2	DOUBLE HOSE CLAMP (USED ON THE 63” FLAIL)
20	21638	1	CAPSCREW 3/8” X 3”
21	35312	2	SPLIT COLLAR

©2015 Alamo Group Inc.

3IN X 13-7/8 IN WELDED CYLINDER BREAKDOWN

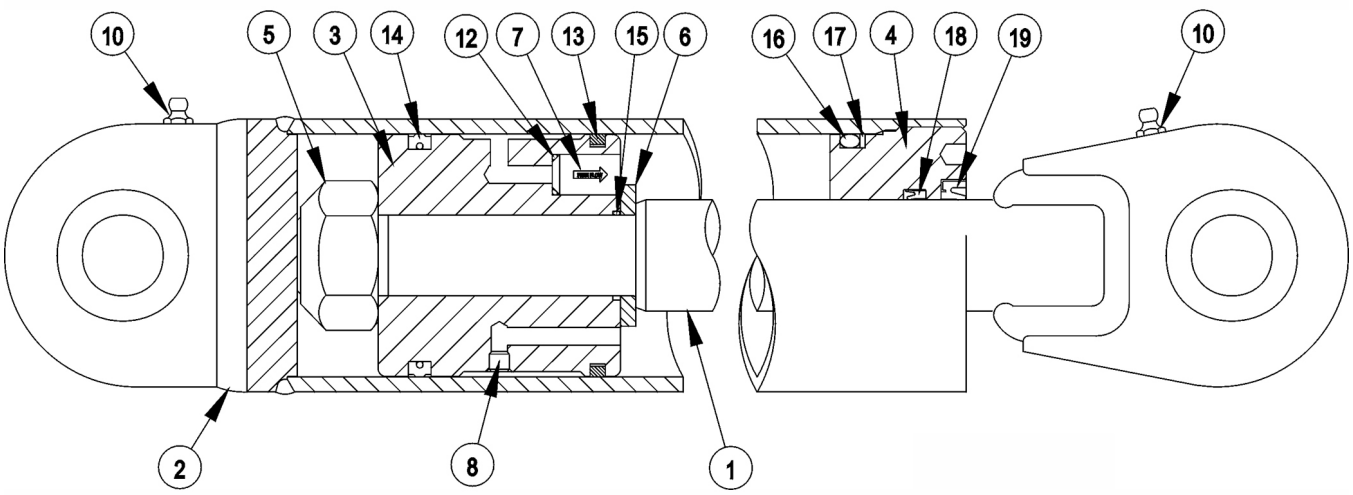

WARNING - MECHANICAL FASTENERS MUST BE TORQUED TO RECOMMENDED SPECIFICATIONS DURING REPAIR TO PREVENT PERSONAL INJURY OR EQUIPMENT DAMAGE.

ITEM	PART NO.	QTY.	DESCRIPTION
---	06501029	-	CYLINDER,WELDED,3" X 13.87"
1	06501630	1	PISTON ROD ASSY
2	06501648	1	BUTT & TUBE ASSY
3	06501649	1	PISTON
4	34574	1	GLAND
5	34575	1	LOCK NUT,1"-14 UNS (TORQUE TO 315 FT.LB.)
6	34576	1	SPACER
7	34577	1	CHECK VALVE,KEPNER
8	06501650	1	ORIFICE, ZERO LEAK, 0225
9	33761	1	SEAL KIT,PACKING (ITEMS 12 THRU 19)
10	------	2	GREASE ZERK
12	------	1	O - RING
13	------	1	CAST IRON PISTON RING
14	------	1	CROWN SEAL
15	------	1	O - RING
16	------	1	O - RING
17	------	1	BACK - UP WASHER
18	------	1	U - CUP
19	------	1	WIPER
20	34334	-	SPHERICAL BEARING (NOT SHOWN)

©2015 Alamo Group Inc.

3IN X 18IN WELDED CYLINDER BREAKDOWN

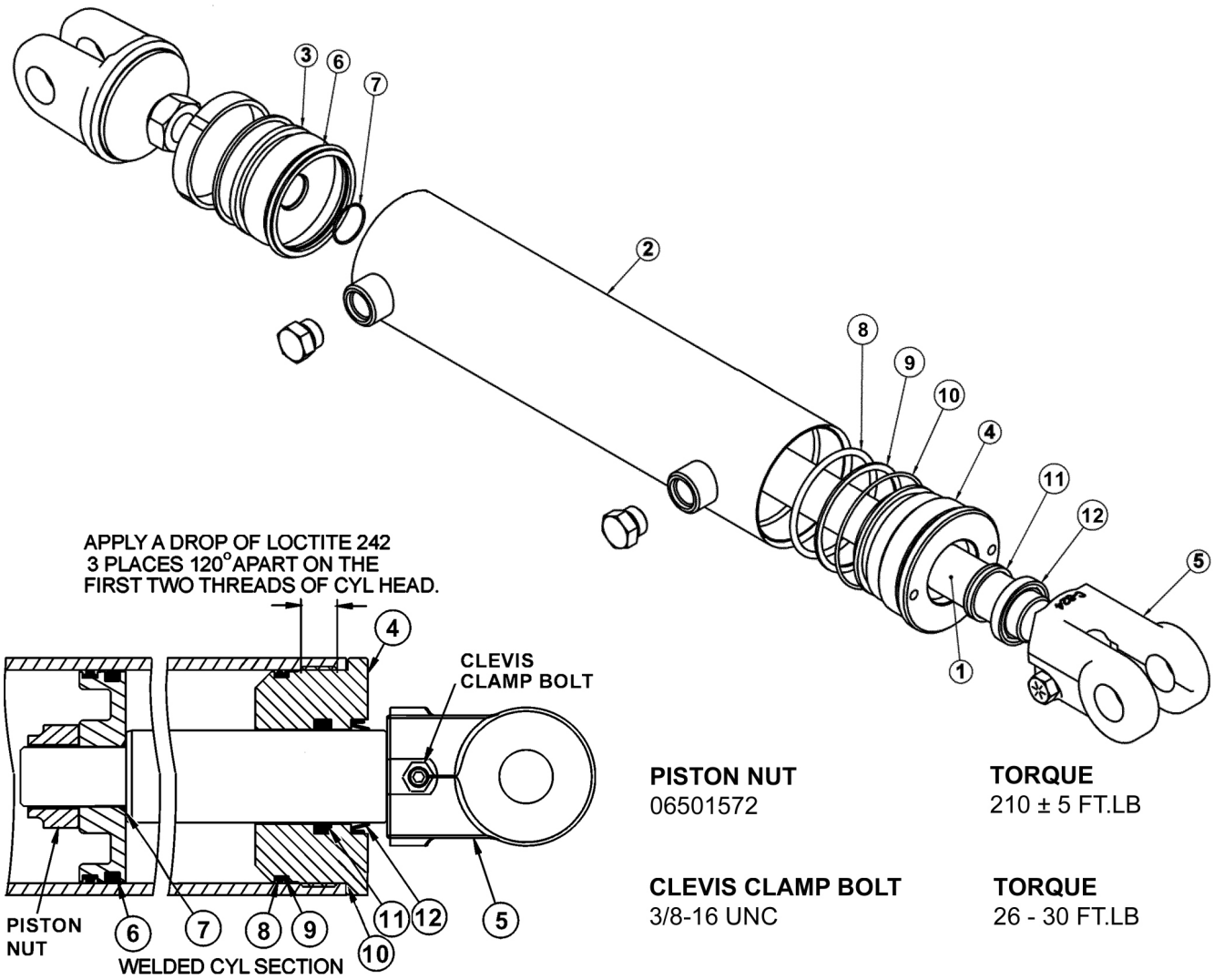

PISTON NUT 06501572	**TORQUE** 210 ± 5 FT.LB
CLEVIS CLAMP BOLT 3/8-16 UNC	**TORQUE** 26 - 30 FT.LB

WARNING - MECHANICAL FASTENERS MUST BE TORQUED TO RECOMMENDED SPECIFICATIONS DURING REPAIR TO PREVENT PERSONAL INJURY OR EQUIPMENT DAMAGE.

ITEM	PART NO.	QTY.	DESCRIPTION
------	06501023	-	HYDRAULIC CYLINDER COMPLETE
1	06501561	1	ROD
2	06501562	1	TUBE WELDMENT
3	06501552	1	PISTON
4	06501563	1	CYLINDER HEAD
5	06501554	1	CLEVIS
------	06501564	-	SEAL REPAIR KIT (ITEMS 6 THROUGH 12)

COMMON BENGAL T4

3-1/2IN X 20IN WELDED CYLINDER BREAKDOWN

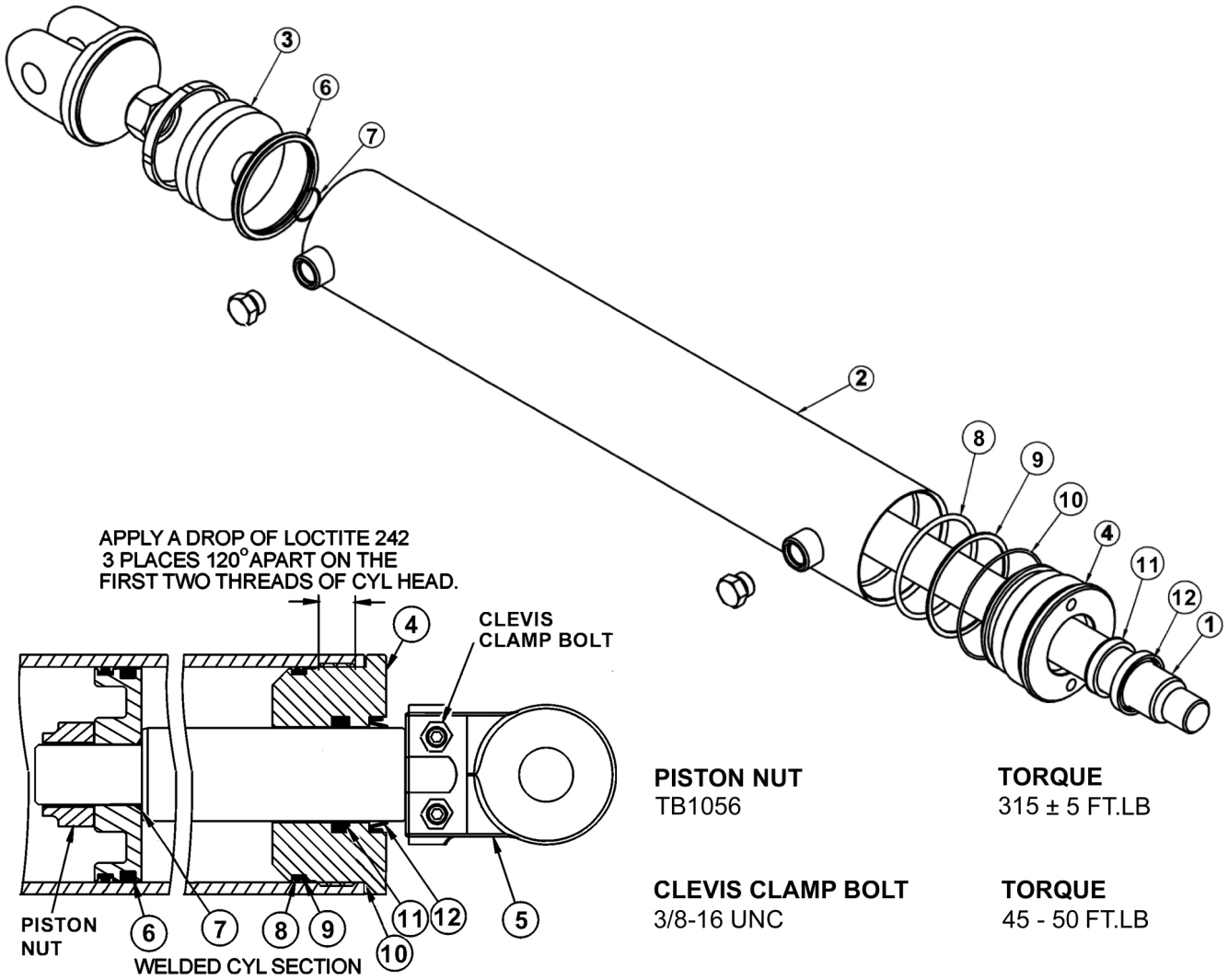

PISTON NUT	**TORQUE**
TB1056	315 ± 5 FT.LB
CLEVIS CLAMP BOLT	**TORQUE**
3/8-16 UNC	45 - 50 FT.LB

WARNING - MECHANICAL FASTENERS MUST BE TORQUED TO RECOMMENDED SPECIFICATIONS DURING REPAIR TO PREVENT PERSONAL INJURY OR EQUIPMENT DAMAGE.

ITEM	PART NO.	QTY.	DESCRIPTION
------	06501024	-	HYDRAULIC CYLINDER COMPLETE
1	06501565	1	ROD
2	06501566	1	TUBE WELDMENT
3	06501567	1	PISTON
4	06501568	1	CYLINDER HEAD
5	TB3033	-	CLEVIS
------	06501569	-	SEAL REPAIR KIT (ITEMS 6 THROUGH 12)

COMMON BENGAL T4

4IN X 20IN WELDED CYLINDER BREAKDOWN

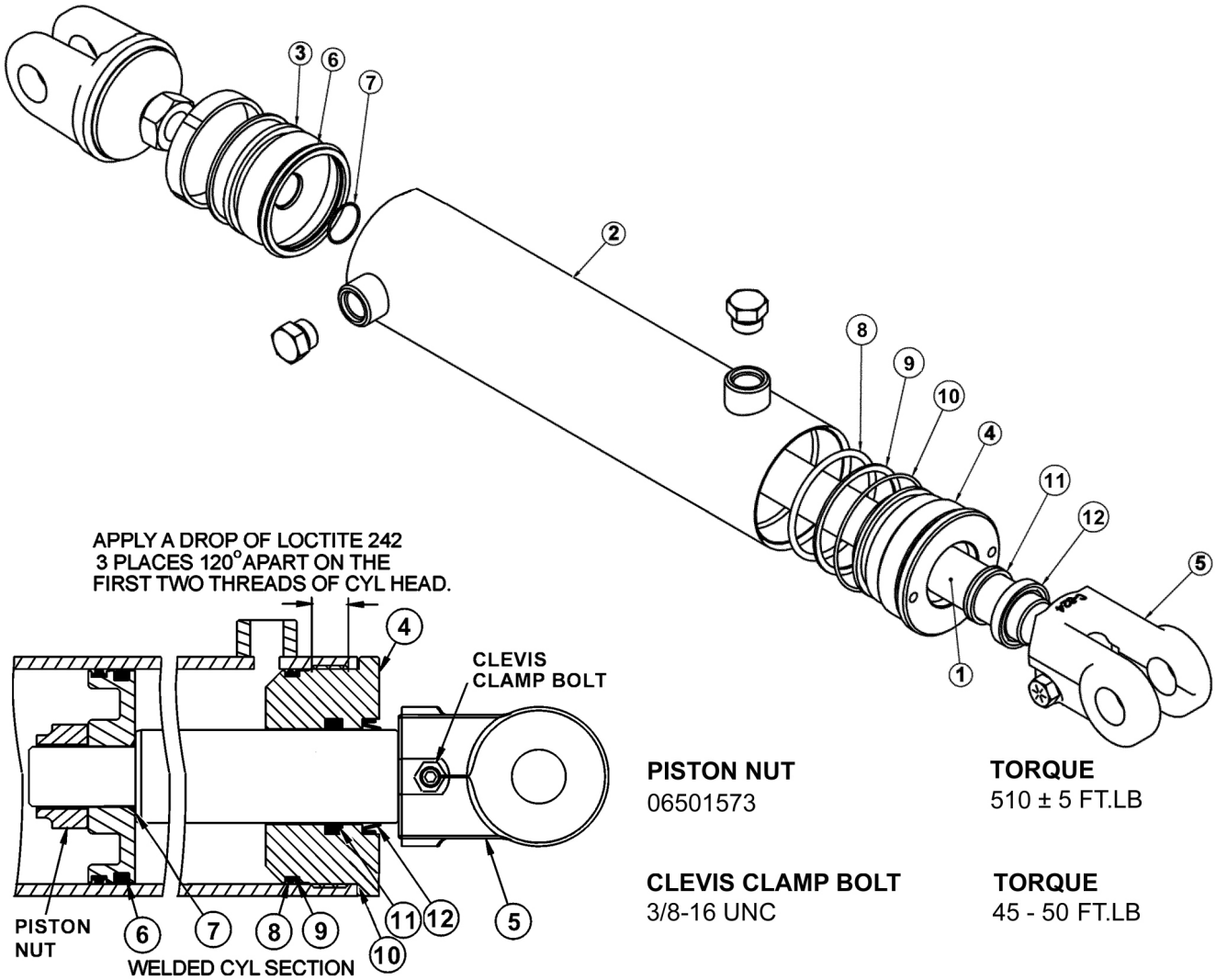

PISTON NUT
06501573

TORQUE
510 ± 5 FT.LB

CLEVIS CLAMP BOLT
3/8-16 UNC

TORQUE
45 - 50 FT.LB

WARNING - MECHANICAL FASTENERS MUST BE TORQUED TO RECOMMENDED SPECIFICATIONS DURING REPAIR TO PREVENT PERSONAL INJURY OR EQUIPMENT DAMAGE.

ITEM	PART NO.	QTY.	DESCRIPTION
------	06501022	-	HYDRAULIC CYLINDER COMPLETE
1	06501556	1	ROD
2	06501557	1	TUBE WELDMENT
3	06501558	1	PISTON
4	06501559	1	CYLINDER HEAD
5	6T0172	1	CLEVIS
5A	30172	-	CLEVIS (FOR EXTENDED BOOM)
------	06501560	-	SEAL REPAIR KIT (ITEMS 6 THROUGH 12)

COMMON BENGAL T4

5IN X 20IN WELDED CYLINDER BREAKDOWN

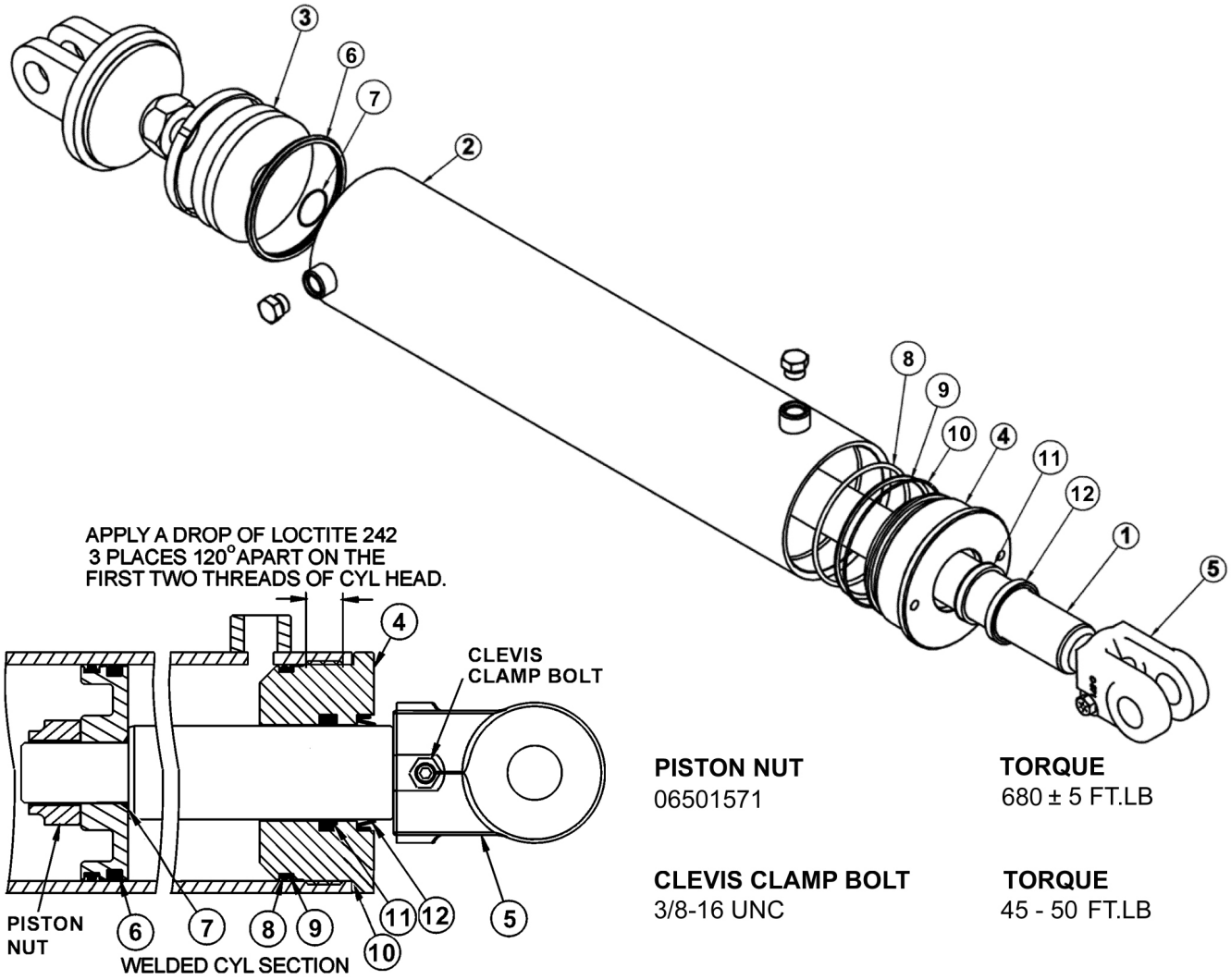

PISTON NUT 06501571	**TORQUE** 680 ± 5 FT.LB
CLEVIS CLAMP BOLT 3/8-16 UNC	**TORQUE** 45 - 50 FT.LB

WARNING - MECHANICAL FASTENERS MUST BE TORQUED TO RECOMMENDED SPECIFICATIONS DURING REPAIR TO PREVENT PERSONAL INJURY OR EQUIPMENT DAMAGE.

ITEM	PART NO.	QTY.	DESCRIPTION
------	06501020	-	HYDRAULIC CYLINDER COMPLETE
1	06501544	1	ROD
2	06501545	1	TUBE WELDMENT
3	06501546	1	PISTON
4	06501547	1	CYLINDER HEAD
5	06501548	1	CLEVIS
------	06501549	-	SEAL REPAIR KIT (ITEMS 6 THROUGH 12)

COMMON BENGAL T4

NOTES

©2015 Alamo Group Inc.

5 SPOOL ELECTRONIC VALVE - OPEN STOW,3PS

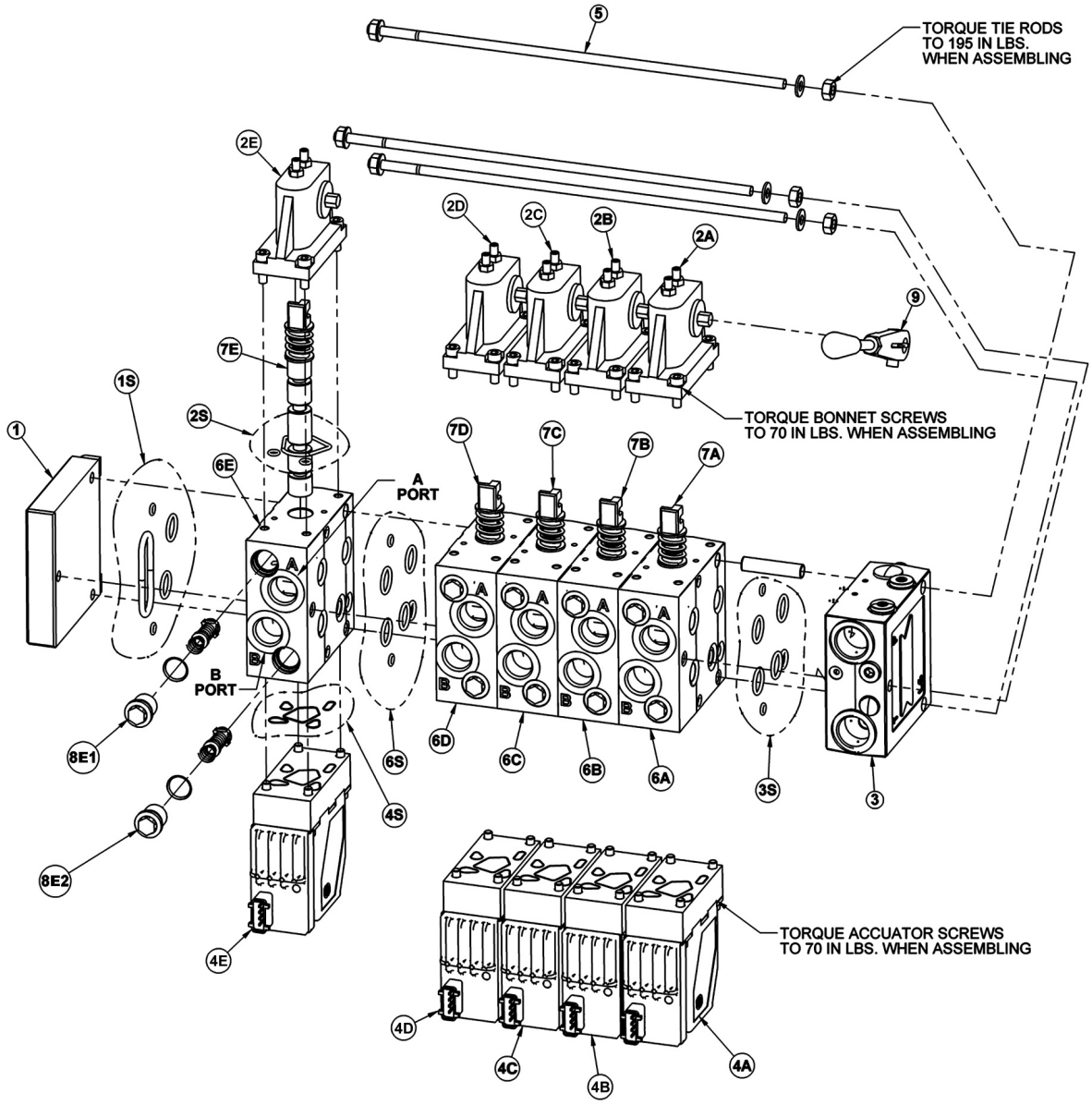

ITEM	PART NO.	QTY.	DESCRIPTION
------	06502097	-	VLV,5SP,32PVG,OPEN STOW, 3OS
1	06502074	1	END PLATE
1S	06505013	1	END PLATE SEAL KIT
2	------	5	BONNET
2S	06505042	1	BONNET SEAL KIT
2A	42197	1	MAIN BOOM BONNET
2B	42197	1	SECONDARY BOOM BONNET
2C	42197	1	DECK ROLL BONNET
2D	42197	1	BOOM SWIVEL BONNET
2E	42197	1	DECK SHIELD BONNET

COMMON BENGAL T4

Continued...

ITEM	PART NO.	QTY.	DESCRIPTION
3	34308	1	INLET SECTION
3S	06505013	1	INLET SECTION SEAL KIT
4	------	5	ELECTRONIC ACCUATOR
4A	06502101	1	MAIN BOOM ELECTRONIC ACCUATOR
4B	06502101	1	SECONDARY BOOM ELECTRONIC ACCUATOR
4C	06502100	1	DECK ROLL ELECTRONIC ACCUATOR
4D	06502101	1	BOOM SWIVEL ELECTRONIC ACCUATOR
4E	06502099	1	DECK SHIELD ELECTRONIC ACCUATOR
5	42202	1	TIE-BOLT KIT
6	------	5	SECTION
6S	06505013	1	SECTION SEAL KIT
6A	42698	1	MAIN BOOM SECTION
6B	42698	1	SEC BOOM SECTION
6C	06502076	1	DECK ROLL SECTION
6D	42698	1	BOOM SWIVEL SECTION
6E	06502077	1	SHIELD SECTION
7	------	5	SPOOL
7A	42697	1	MAIN BOOM SPOOL
7B	42697	1	SEC BOOM SPOOL
7C	4242106	1	DECK ROLL SPOOL
7D	06502073	1	BOOM SWIVEL SPOOL
7E	42201	1	DECK SHIELD SPOOL
8	------	10	ANTI CAV/SHOCK RELIEF
8A1	06502084	1	MAIN BOOM A PORT RELIEF
8A2	06502081	1	MAIN BOOM B PORT RELIEF
8B1	42296	1	SEC BOOM A PORT RELIEF
8B2	06502082	1	SEC BOOM B PORT RELIEF
8C1	42295	1	DECK ROLL A PORT RELIEF
8C2	06502082	1	DECK ROLL B PORT RELIEF
8D1	06502070	1	BOOM SWIVEL A PORT RELIEF
8D2	06502083	1	BOOM SWIVEL B PORT RELIEF
8E1	06502081	1	DECK SHIELD A PORT RELIEF
8E2	06502081	1	DECK SHIELD B PORT RELIEF
9	33459	1	HANDLE

©2015 Alamo Group Inc.

5 SPOOL ELECTRONIC VALVE - SIDE STOW

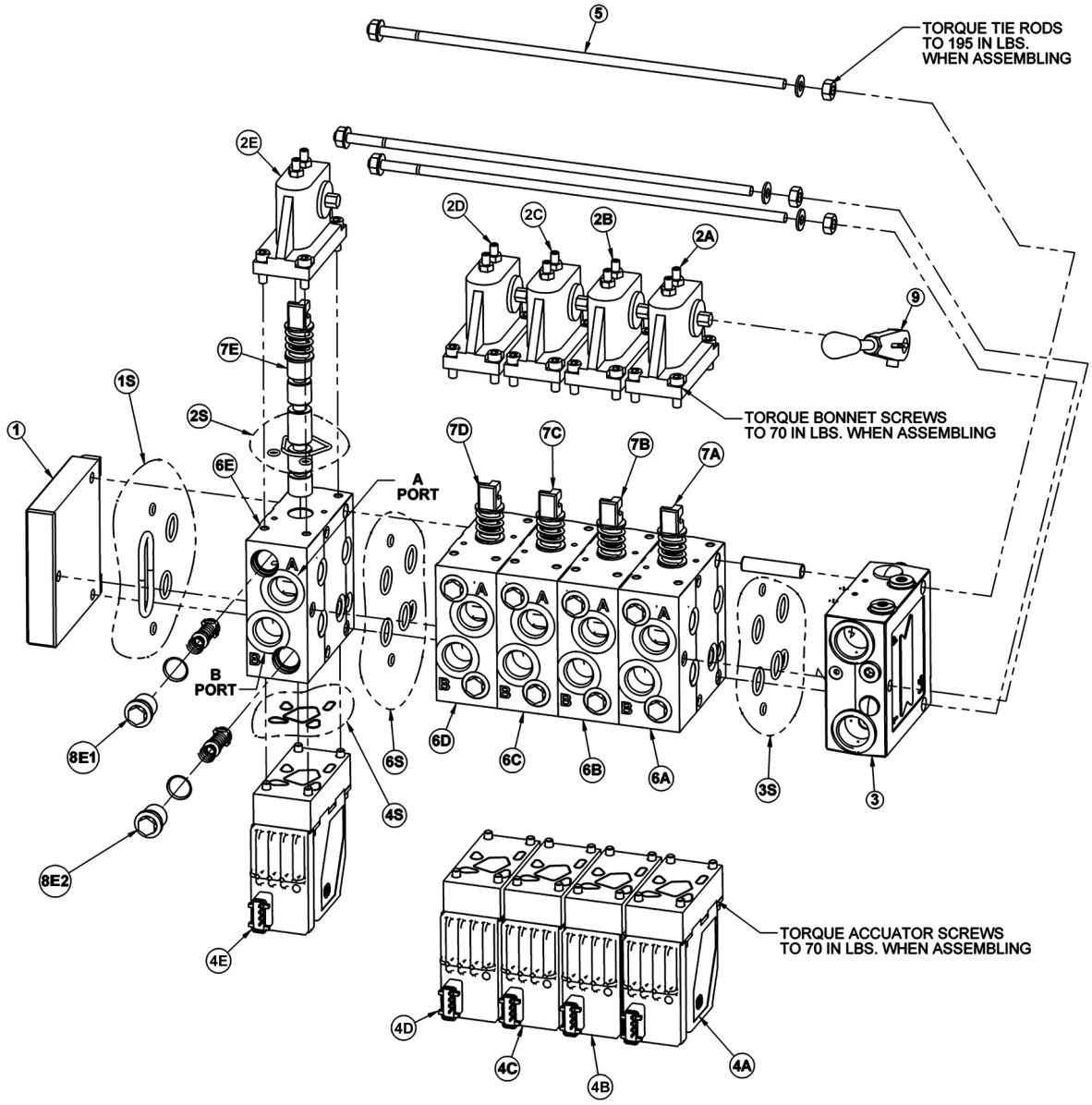

ITEM	PART NO.	QTY.	DESCRIPTION
------	06502096	-	VLV,5SP,32PVG,SIDE STOW
1	06502074	1	END PLATE
1S	06505013	1	END PLATE SEAL KIT
2	------	5	BONNET
2S	06505042	1	BONNET SEAL KIT
2A	42197	1	MAIN BOOM BONNET
2B	42197	1	SECONDARY BOOM BONNET
2C	42197	1	DECK ROLL BONNET
2D	42197	1	BOOM SWIVEL BONNET
2E	42197	1	DECK SHIELD BONNET

COMMON BENGAL T4

Continued...

ITEM	PART NO.	QTY.	DESCRIPTION
3	34308	1	INLET SECTION
3S	06505013	1	INLET SECTION SEAL KIT
4	------	5	ELECTRONIC ACCUATOR
4A	06502101	1	MAIN BOOM ELECTRONIC ACCUATOR
4B	06502101	1	SECONDARY BOOM ELECTRONIC ACCUATOR
4C	06502100	1	DECK ROLL ELECTRONIC ACCUATOR
4D	06502101	1	BOOM SWIVEL ELECTRONIC ACCUATOR
4E	06502099	1	DECK SHIELD ELECTRONIC ACCUATOR
5	42202	1	TIE-BOLT KIT
6	------	5	SECTION
6S	06505013	1	SECTION SEAL KIT
6A	42698	1	MAIN BOOM SECTION
6B	42698	1	SEC BOOM SECTION
6C	06502076	1	DECK ROLL SECTION
6D	42698	1	BOOM SWIVEL SECTION
6E	06502077	1	SHIELD SECTION
7	------	5	SPOOL
7A	42697	1	MAIN BOOM SPOOL
7B	42697	1	SEC BOOM SPOOL
7C	4242106	1	DECK ROLL SPOOL
7D	06502073	1	BOOM SWIVEL SPOOL
7E	42201	1	DECK SHIELD SPOOL
8	------	10	ANTI CAV/SHOCK RELIEF
8A1	42650	1	MAIN BOOM A PORT RELIEF
8A2	06502069	1	MAIN BOOM B PORT RELIEF
8B1	42650	1	SEC BOOM A PORT RELIEF
8B2	42295	1	SEC BOOM B PORT RELIEF
8C1	42296	1	DECK ROLL A PORT RELIEF
8C2	42295	1	DECK ROLL B PORT RELIEF
8D1	42295	1	BOOM SWIVEL A PORT RELIEF
8D2	42295	1	BOOM SWIVEL B PORT RELIEF
8E1	06502069	1	DECK SHIELD A PORT RELIEF
8E2	06502069	1	DECK SHIELD B PORT RELIEF
9	33459	1	HANDLE

©2015 Alamo Group Inc.

FRONT HYDRAULIC PUMP

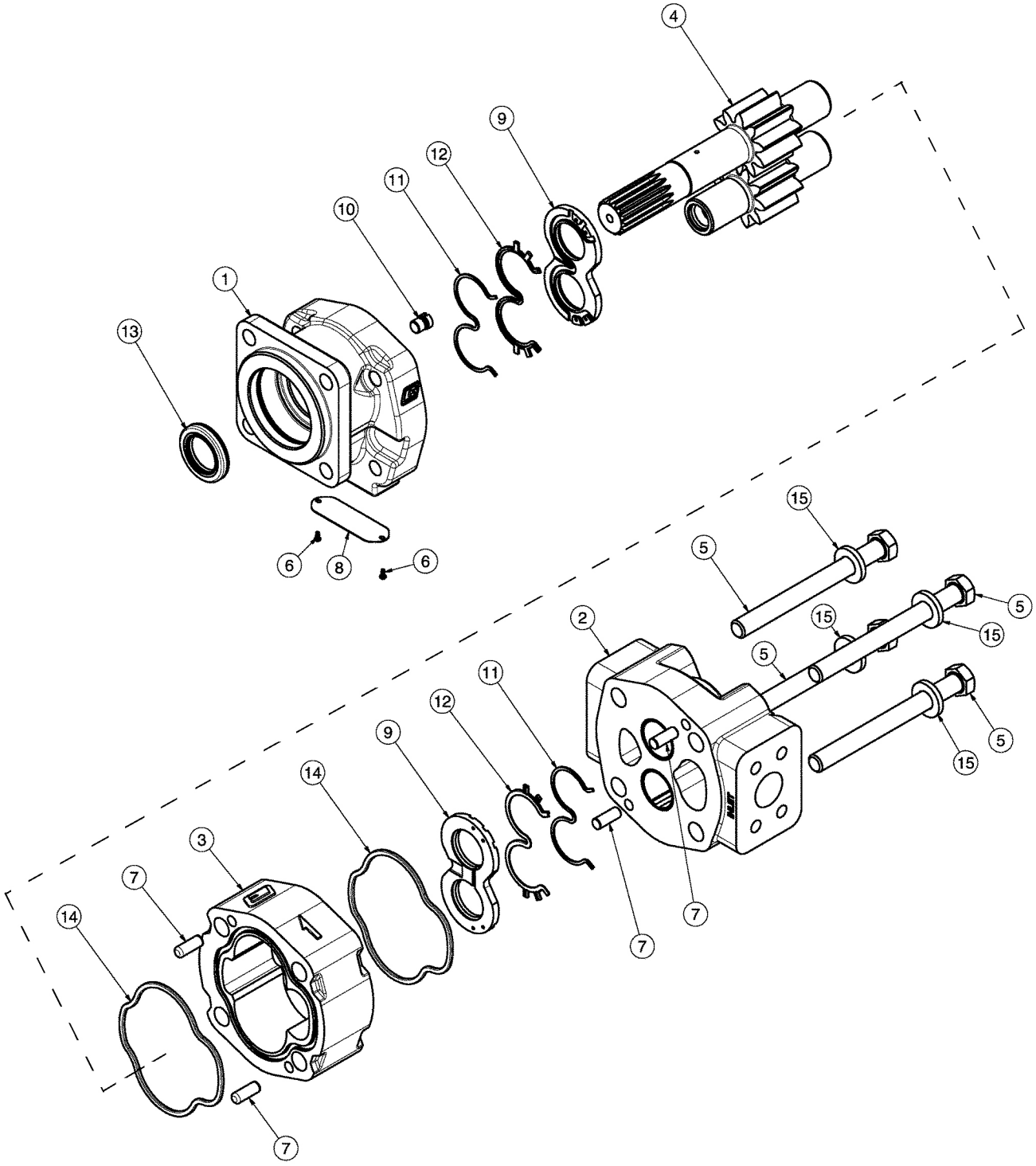

COMMON BENGAL T4

Continued...

ITEM	PART NO.	QTY.	DESCRIPTION
---	23152	1	PUMP ASSEMBLY,1-3/4",COMPLETE
1	22766	1	SHAFT END COVER
2	22779	1	PORT END COVER
3	22774	1	GEAR HOUSING,1-3/4"
4	22771	1	GEAR SET
5	23824	4	CAPSCREW
6	06504078	2	SCREW,DRIVE
7	22773	4	DOWEL PINS
8	06504077	1	NAMEPLATE
9	22770	2	THRUST PLATE
10	22767	1	PLUG
11	06504075	2	SEAL,BK-UP
12	06504074	2	SEAL,CHAN
13	22765	1	SEAL,LIP
14	06504076	2	SEAL,SQ-R
15	02961917	4	WASHER
---	24150	1	SEAL KIT (INCLUDES 11, 12, 13 AND 14)

©2015 Alamo Group Inc.

50IN AND 60IN ROTARY MOTOR BREAKDOWN

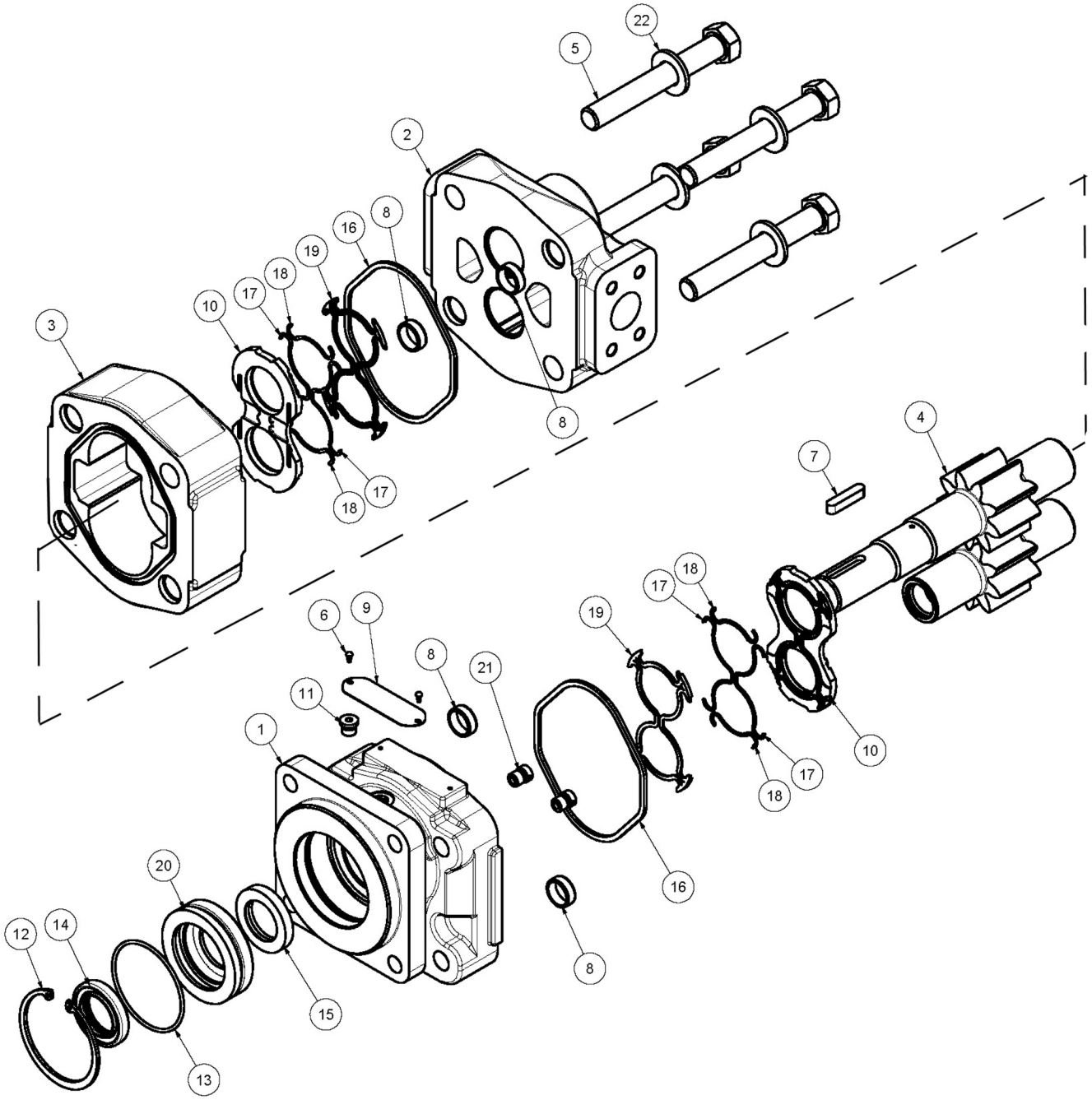

COMMON BENGAL T4

Continued...

ITEM	PART NO.	QTY.	DESCRIPTION
	06504011	-	MOTOR ASSEMBLY,TRB60
	06504012	-	MOTOR ASSEMBLY,TRB50
1	22790	1	HOUSING, SEC
2	06504088	1	HOUSING, PEC
3	06504062	1	HOUSING, GEAR,TRB60
------	06504089	-	HOUSING, GEAR,TRB50
4	06504090	1	SET, GEAR SHAFT
5	06504104	4	CAP SCREW,TRB60
------	06504091	-	CAP SCREW,TRB50
6	06504078	2	SCREW, DRIVE
7	06504092	1	KEY
8	06504093	4	PIN, DOWEL
9	06504094	1	NAME PLATE
10	06504095	2	THRPL
11	2961940	1	PLUG, ODT
12	2962200	1	RING, SNAP
13	06504096	1	O RING
14	6T5101	1	SEAL, LIP
15	06504097	1	SEAL, LIP
16	22797	2	SEAL, SQ-R
17	06504098	4	SEAL, SIDE CHAN
18	06504099	4	SEAL, END CHAN
19	06504100	2	SEAL, BK-UP
20	06504101	1	RTNR, SEAL
21	6T5809	2	CHECK ASS'Y
22	06504102	4	WASHER
------	06504103	-	SEAL KIT

©2015 Alamo Group Inc.

FLAIL MOTOR BREAKDOWN

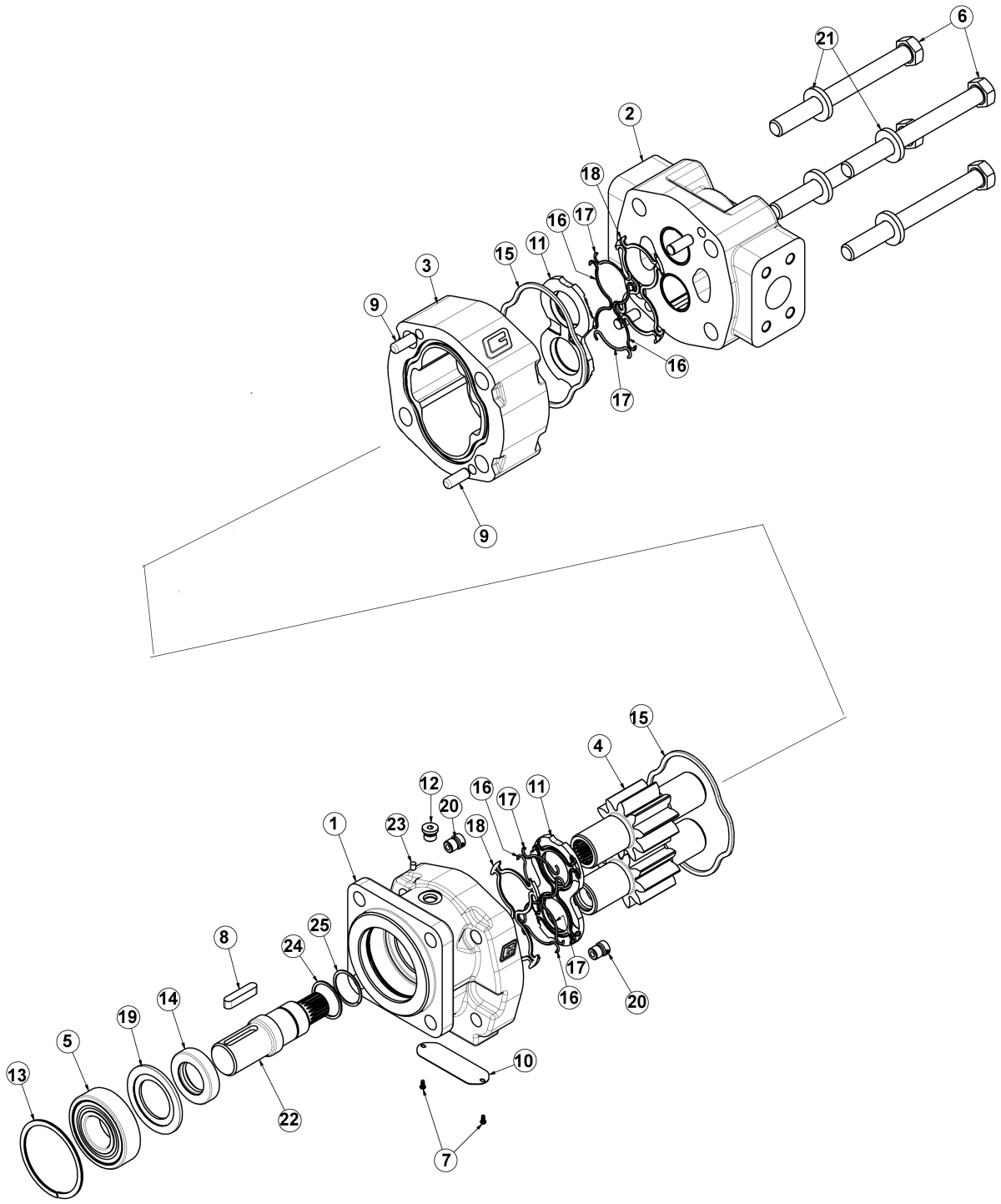

COMMON BENGAL T4

Continued...

ITEM	PART NO.	QTY.	DESCRIPTION
*	06504132	-	MOTOR ASSEMBLY 350 - TBF50, TBF63
1	06504141	1	SHAFT END COVER
2	06504040	1	PORT END COVER
3	06504041	1	GEAR HOUSING
4	06504117	1	MATCHED GEAR SET
5	TF4402	1	BALL BEARING
6	06504043	4	CAP SCREW
7	06504044	2	SET SCREW
8	06504028	1	KEY
9	06504045	4	DOWEL PIN
10	*	1	NAMEPLATE
11	763759	1	THRUSTPLATE
12	2961940	1	PLUG, ODT (0.25)
13	TF4401	1	SNAP RING
14	06504142	1	LIP SEAL
15	TF4410	2	GASKET SEAL
16	06504046	4	SIDE SEAL
17	06504047	4	END SEAL
18	TF4407	2	BACK-UP SEAL
19	06504122	1	SEAL RETAINER
20	6T5809	2	CHECK ASSEMBLY
21	2961917	4	WASHER
22	06504140	1	SHAFT
23	06504139	1	BREATHER
24	06504121	1	SPACER, BRG
25	06504119	1	SNAP RING
*	06504116	1	SEAL KIT

©2015 Alamo Group Inc.

RESERVOIR TANK FILTER ASSEMBLY

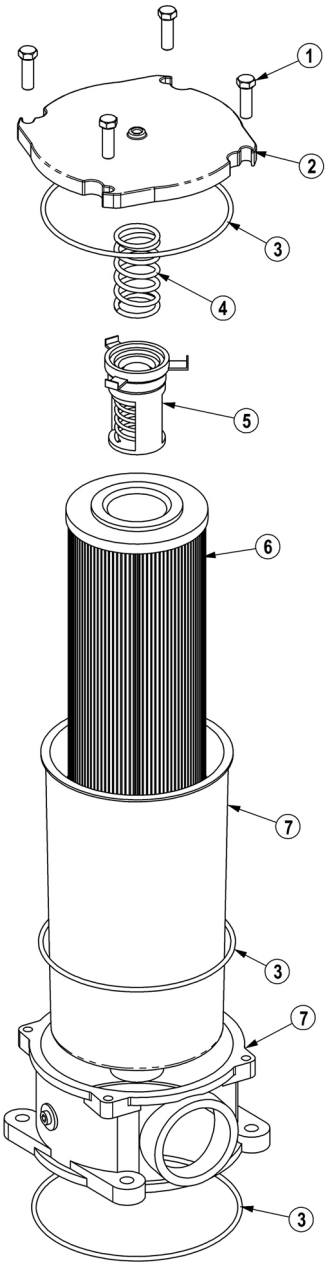

ITEM	PART NO.	QTY.	DESCRIPTION
------	06505044	-	FILTER ASSY SAE 10 MICRON
1	28583	4	CAPSCREW,8MM X 25MM(1.25 PITCH)
2	06505045	1	COVER
3	06505046	1	SEAL KIT
4	06505047	1	SPRING
5	06505048	1	BYPASS
6	35259	1	FILTER,10 MIC,RETURN LINE
7	06505049	1	CAN/BODY

COMMON BENGAL T4

PUMP AND GRILL GUARD OPTIONS

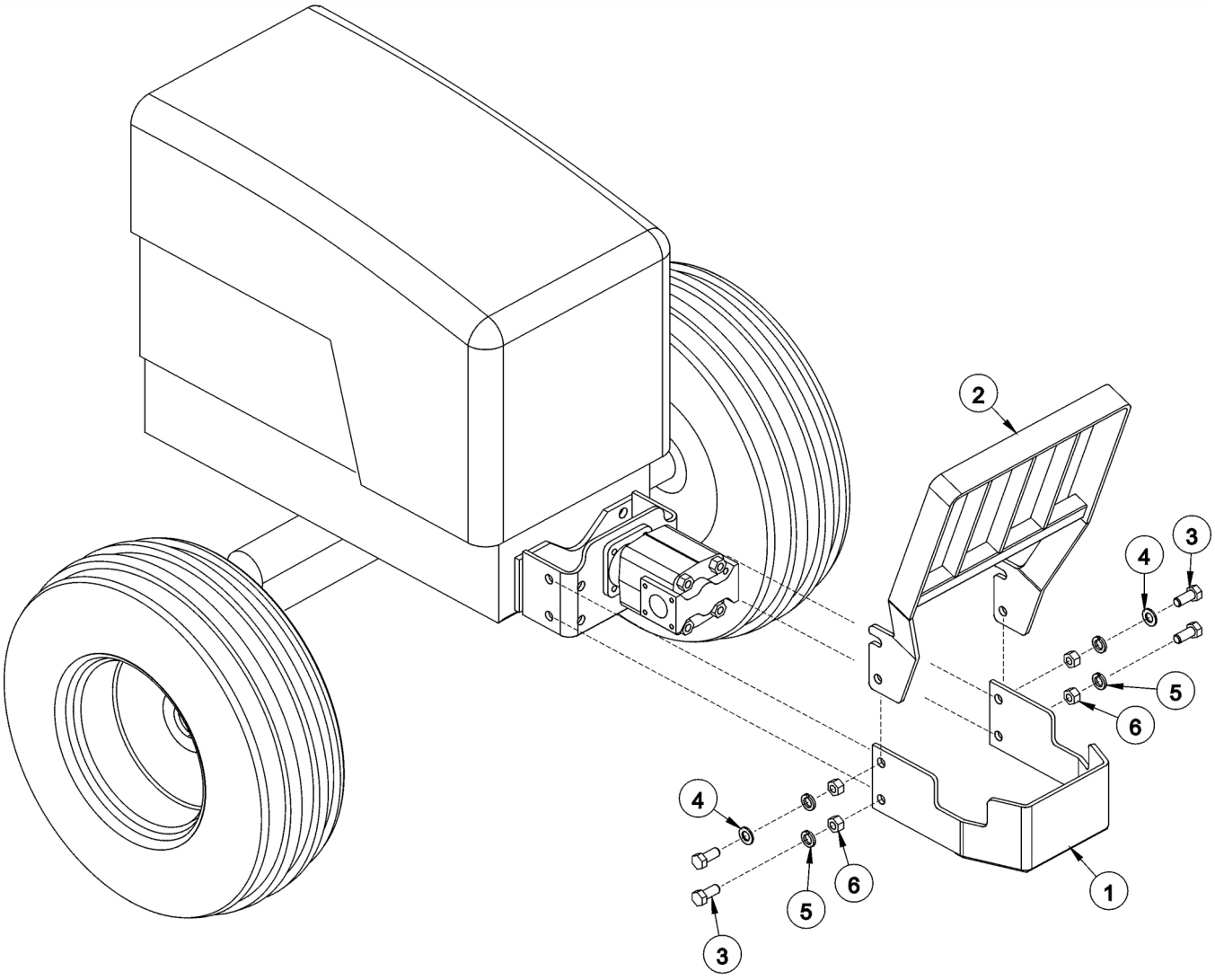

ITEM	PART NO.	QTY.	DESCRIPTION
1	32430	1	UNIVERSAL PUMP GUARD
2	32737	1	UNIVERSAL GRILL GUARD
3	21833	4	CAPSCREW,3/4" X 2-1/4",NC
4	22021	2	FLATWASHER,3/4"
5	21993	4	LOCKWASHER,3/4"
6	21825	4	HEX NUT,3/4",NC

COMMON BENGAL T4

BOOM TRAVEL LOCK

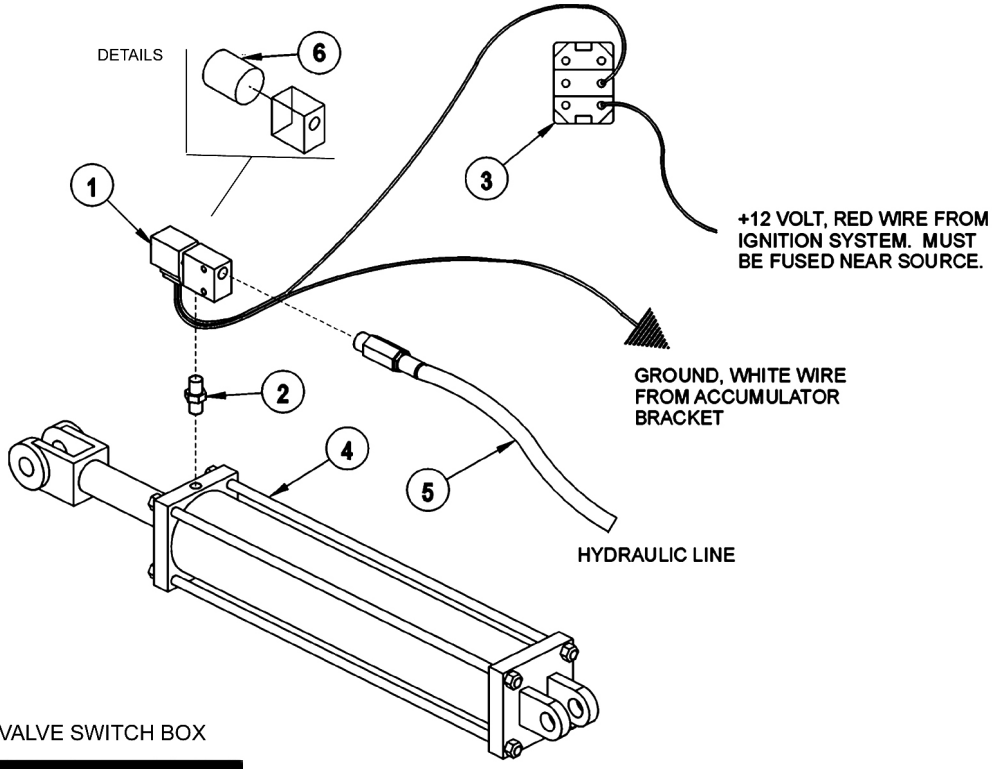

ELECTRONIC LIFT VALVE SWITCH BOX

MANUAL LIFT VALVE SWITCH BOX

ITEM	PART NO.	QTY.	DESCRIPTION
1	06510050	1	HYDRAULIC TRAVEL LOCK VALVE
2	31329	1	ADAPTER - STANDARD BOOM
------	31611	1	ADAPTER - EXTENDED BOOM
3	34532	1	SWITCH,TRAVEL LOCK
4	------	-	MAIN BOOM CYLINDER *REFER TO BOOM ASSY
5	------	-	HOSE / FITTINGS *REFER TO BOOM HYD ASSY
6	06510092	1	COIL ,TRAVEL LOCK

COMMON BENGAL T4

MANUAL LIFT VALVE SWITCH BOX

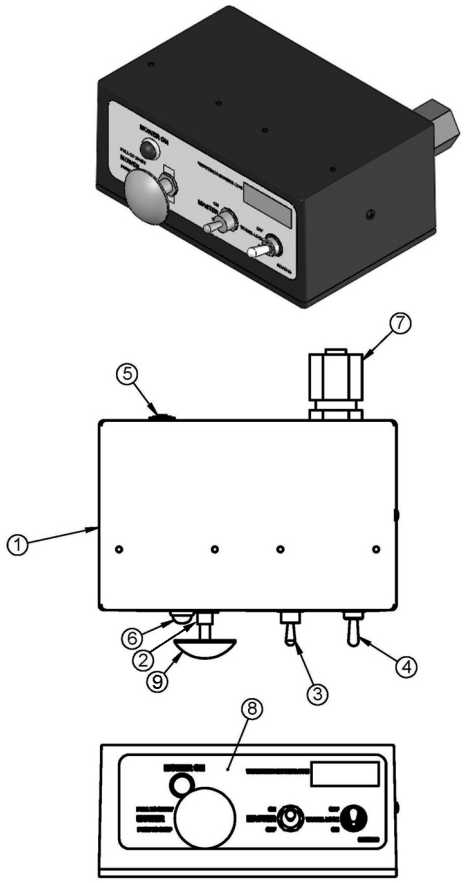

ITEM	PART NO.	QTY.	DESCRIPTION
1	06514012	1	SWBX,ALUM,BLK,06510100
2	35226	1	SWITCH,MOWER,COLEHERSEE
3	33811	1	SWITCH,MASTER/DECK FLOAT
4	34532	1	SWITCH,TRVL LCK
5	06514014	1	BREAKER,10A,SWBX
6	6T3923	1	INDICTATOR LIGHT,ON,RED
7	34540	1	STRAIN RELIEF,3/4,BLACK,NYLON
8	06550019	1	DECAL,SWTCHBX,BOOM,CG
9	02964063	1	KNOB,RED
10	35227	1	RELAY,DP,DT,12V,LY2F,35226

©2015 Alamo Group Inc.

MANUAL LIFT VALVE SCHEMATIC

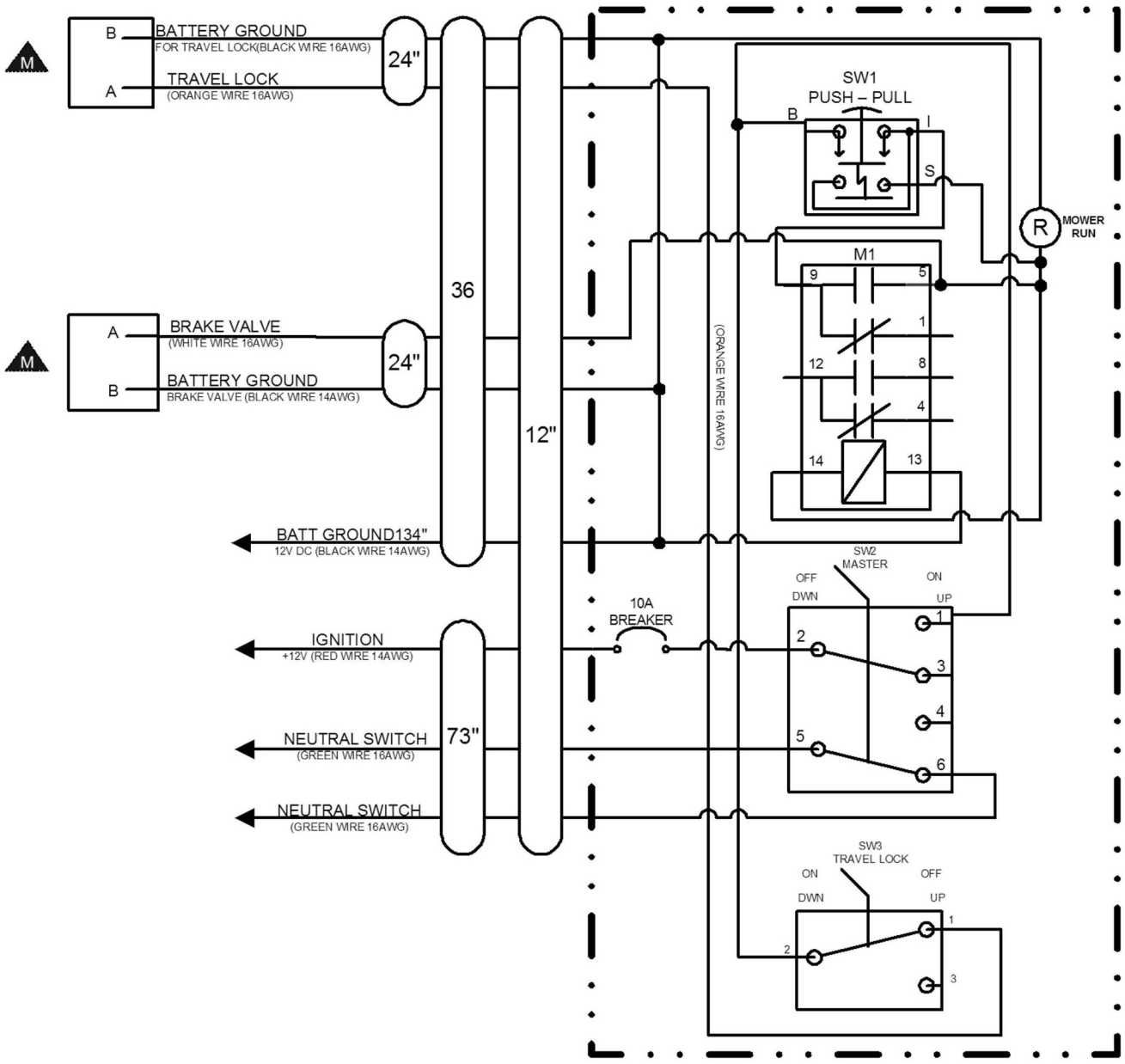

COMMON BENGAL T4

ELECTRONIC LIFT VALVE SWITCH BOX

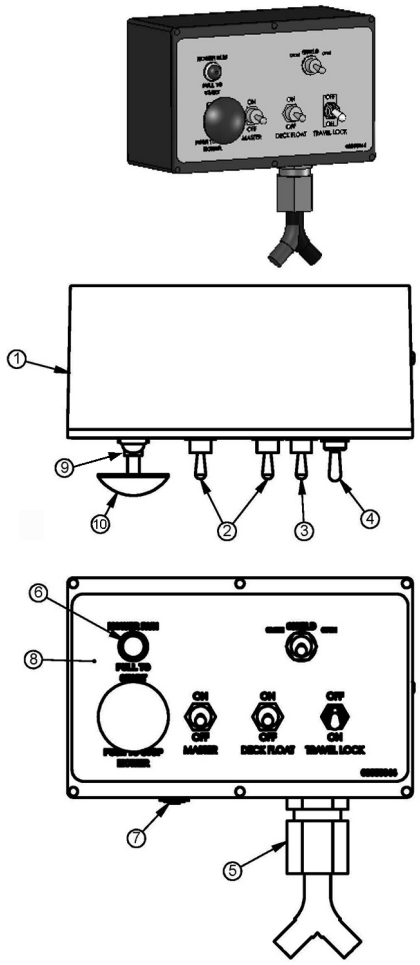

ITEM	PART NO.	QTY.	DESCRIPTION
1	06510196	1	SWBX,ASSY
2	33811	2	SWITCH,MASTER/DECK FLOAT
3	33813	1	SWITCH,SFTY SHIELD
4	34532	1	SWITCH,TRVL LCK
5	34540	1	STRAIN RELIEF,3/4",BLACK,NYLON
6	6T3923	1	INDICTATOR LIGHT,ON,RED
7	06514006	1	BREAKER,15A,SWBX
8	06550044	1	DECAL,SWBX,06510047
9	35226	1	SWITCH,MOWER,COLEHERSEE
10	02964063	1	KNOB,RED
11	35227	1	RELAY,DP,DT,12V,LY2F,35226

©2015 Alamo Group Inc.

ELECTRONIC LIFT VALVE SCHEMATIC

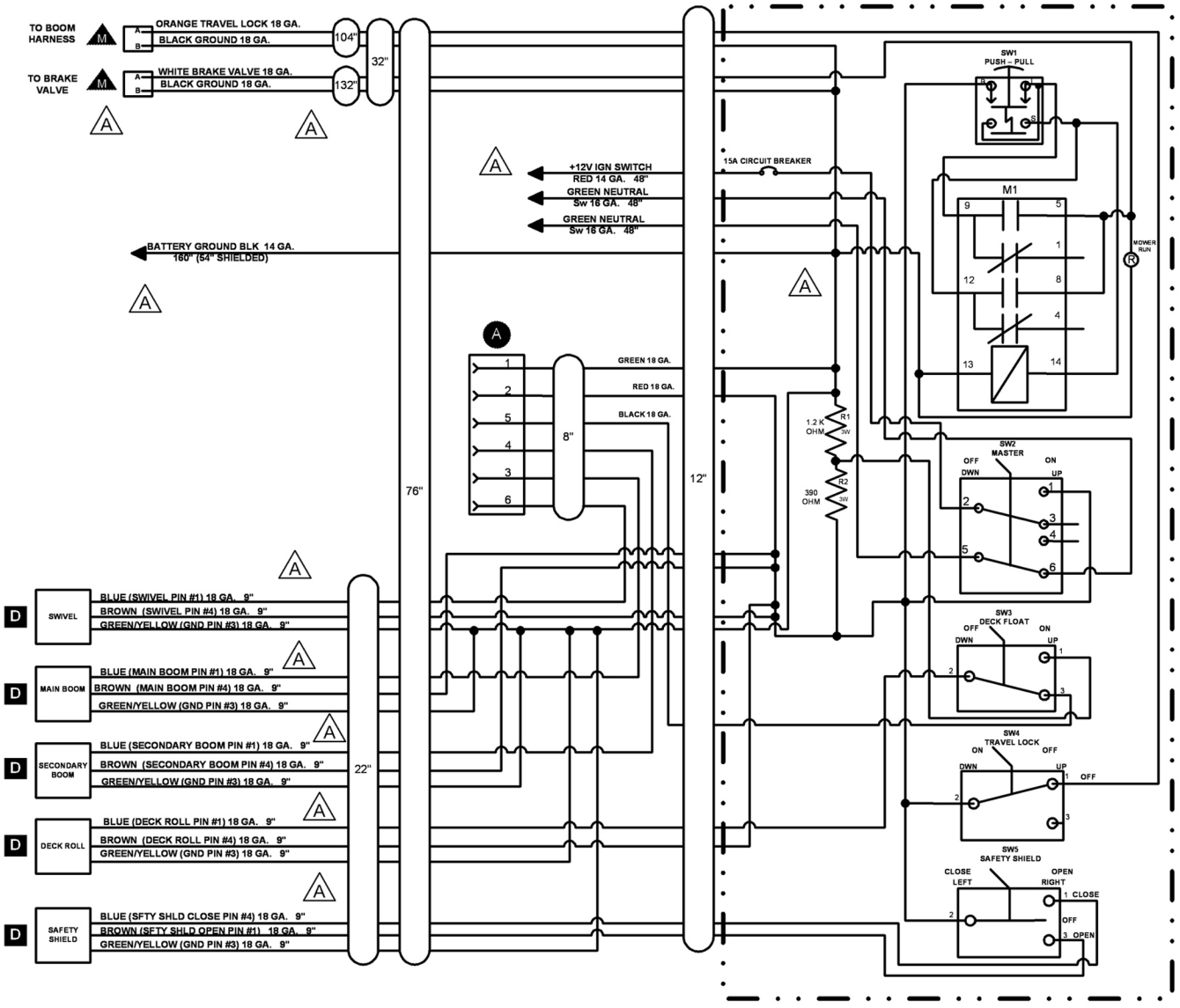

COMMON BENGAL T4

SOLENOID SWITCH BOX AND WIRING

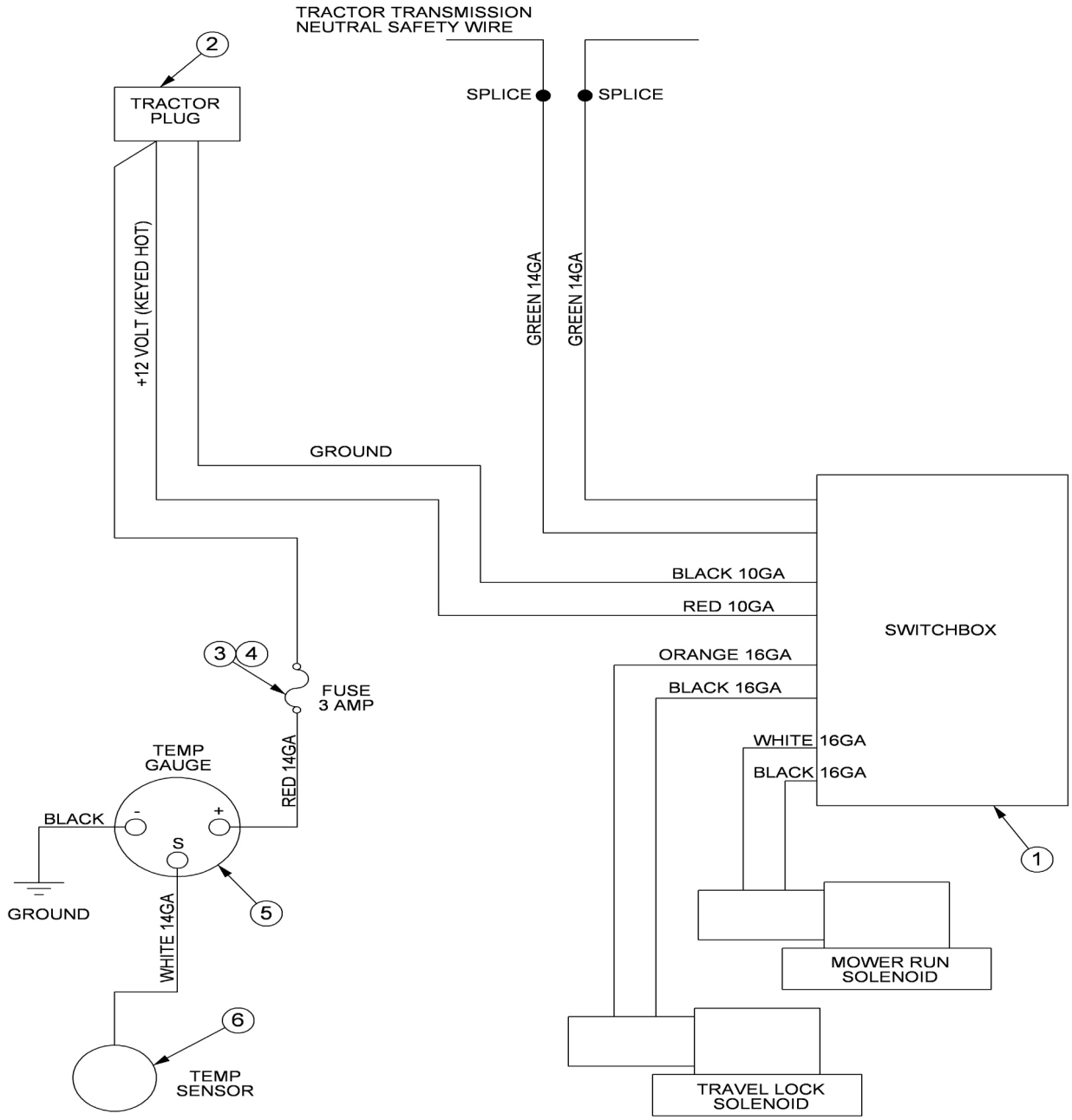

ITEM	PART NO.	QTY.	DESCRIPTION
1	------	-	SWITCH BOX
2	RE37651	1	PLUG,AUX PWR
3	24204	-	FUSE HOLDER,IN-LINE (OPTION)
4	6T3965	-	FUSE,3AMP (OPTION)
5	6T3934	-	TEMPERATURE GAUGE (OPTION)
6	6T3931	-	TEMPERATURE SENSOR (OPTION)

COMMON BENGAL T4

BRAKE VALVE ASSEMBLY

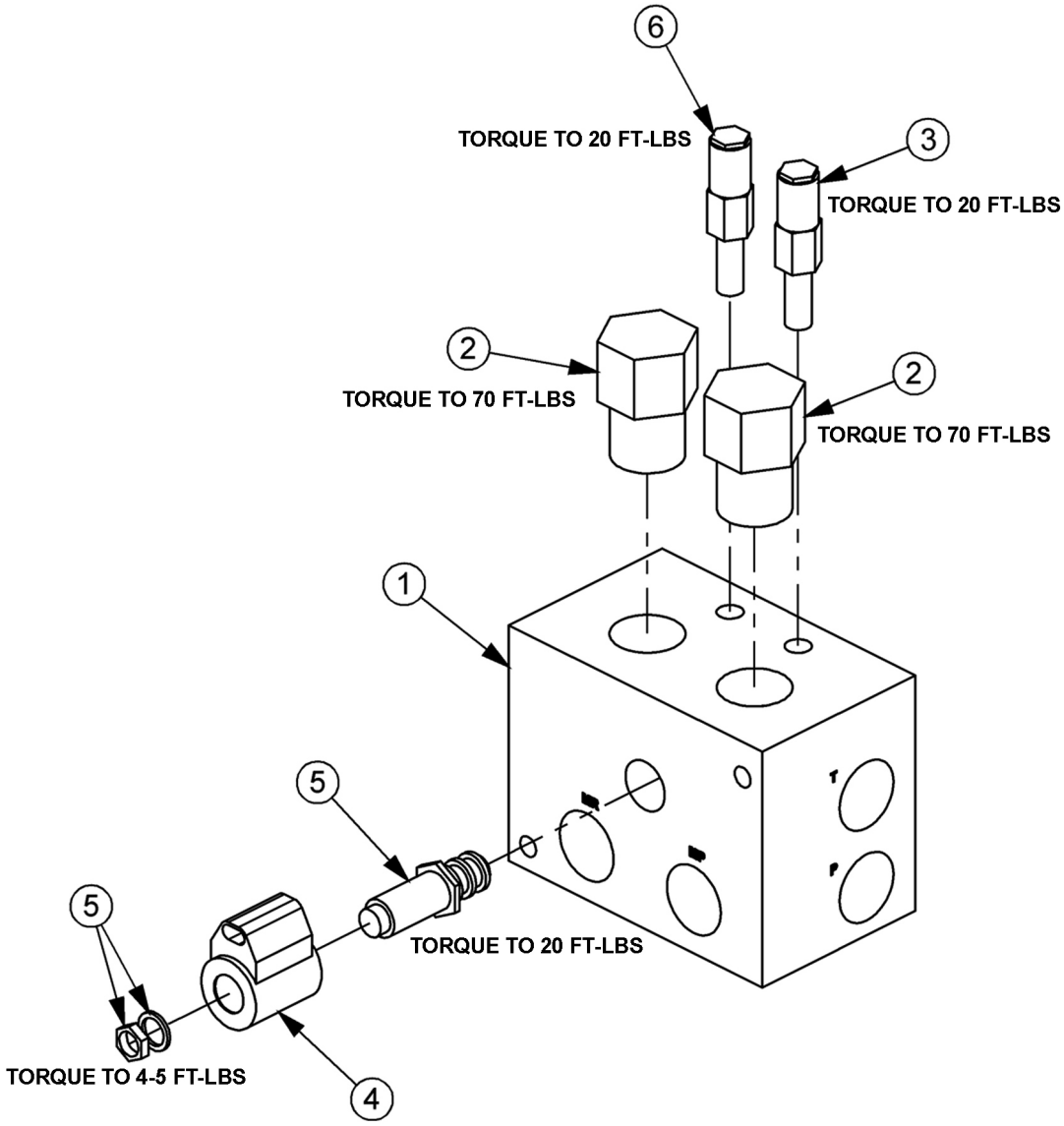

ITEM	PART NO.	QTY.	DESCRIPTION
---	06510083	1	BRAKE VALVE, ASSY
1	34092	1	BRAKE VALVE, BLANK
2	34094	2	LOGIC ELEMENT
3	34095	1	RELIEF VALVE, 3000 PSI
4	06510095	1	METRI PAK COIL
5	34093	1	CARTRIDGE, 2 POSITION, 3 WAY (WITH NUT & WASHER)
6	34091	1	RELIEF VALVE, 2600 PSI
---	34096	2	RELIEF SEAL KIT
----	34097	1	SOLENOID SEAL KIT
---	34098	2	ELEMENT SEAL KIT

COMMON BENGAL T4

©2015 Alamo Group Inc.

BRAKE VALVE HYDRAULIC SCHEMATIC

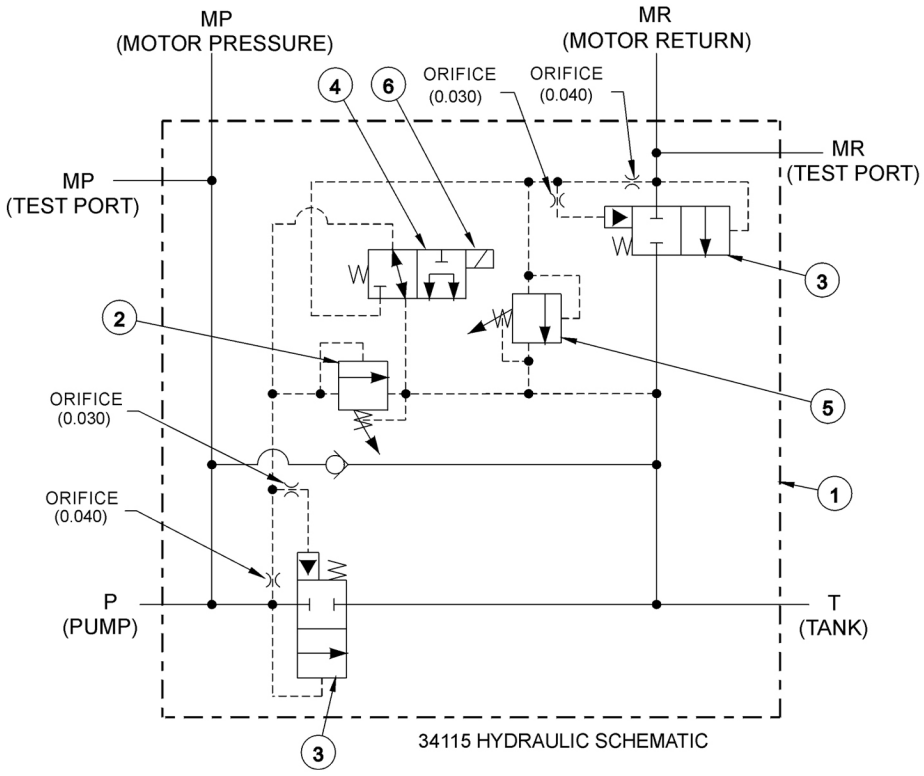

BRAKE VALVE TROUBLESHOOTING

FAILURE MODE:	CHECK STEPS
- MOWER WILL NOT START - system pressure is low (engine not lugging).	1 thru 6
- MOWER WILL NOT START - system pressure is high (engine lugging). "MR" port will be high pressure.	7
- MOWER WILL NOT ROTATE AT FULL SPEED - limited power.	3 thru 5
- MOWER BLADE WILL NOT STOP - blade will not stop in proper time.	7 thru 9

CORRECTIVE STEPS:

1. Check for voltage at solenoid (item 6), voltage must be between 10.2 volts and 13.8 volts.
2. Remove, inspect solenoid and cartridge (items 4, 6) for wear or contamination.
3. Remove, inspect logic elements near "P" port (item 3) for wear or contamination.
4. Remove, inspect 3000 psi relief valve (item 2) for wear or contamination.
5. Remove and inspect orifices near "P" port for contamination.
6. Remove "P" port hose and fitting, visually inspect for contamination, check ball for movement.
7. Remove and inspect orifices near "MR" port for contamination.
8. Remove, inspect 2600 psi relief valve (item 5) for wear of contamination.
9. Remove, inspect logic element near "MR" port (item 3) for wear or contamination.

©2015 Alamo Group Inc.

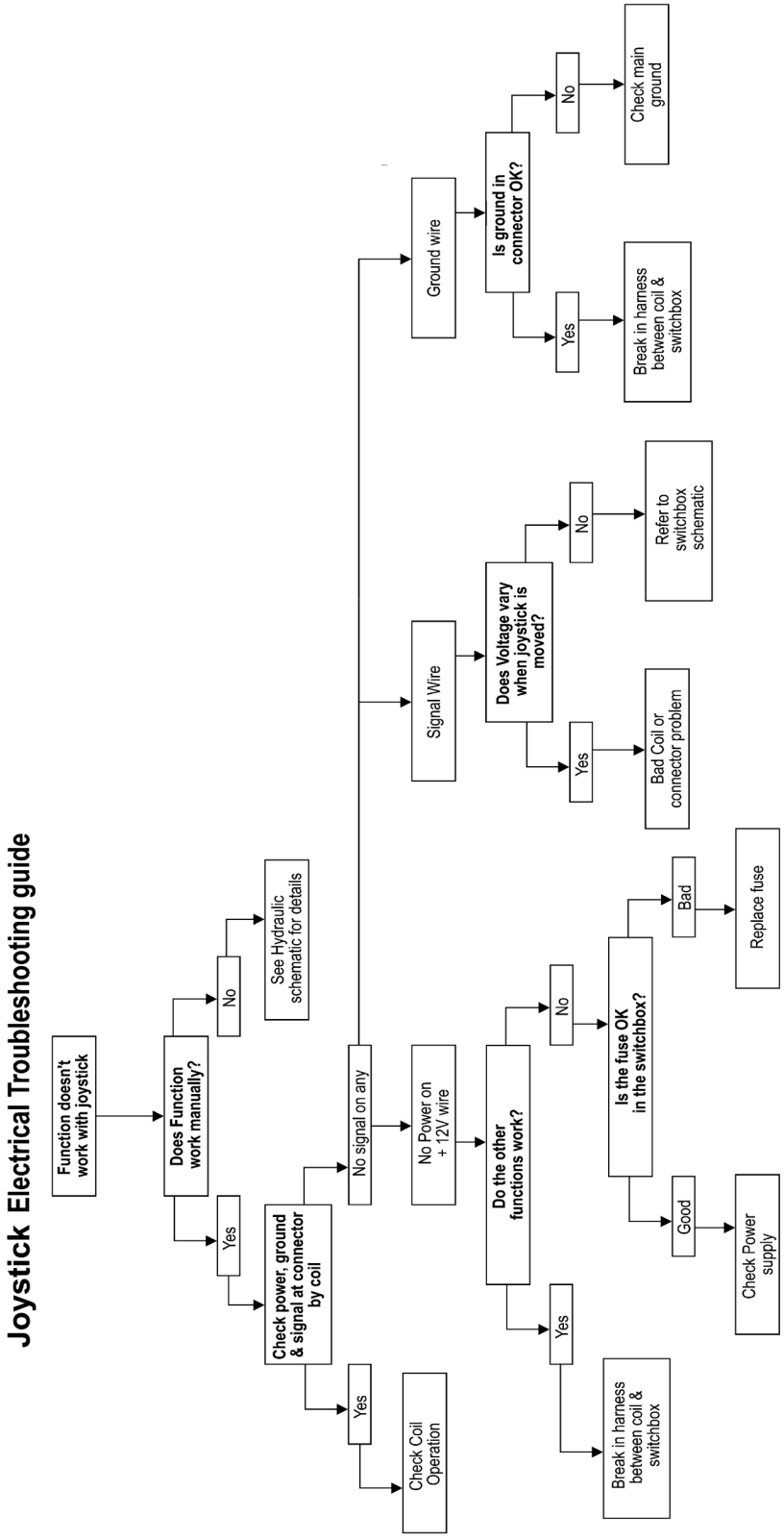

©2015 Alamo Group Inc.

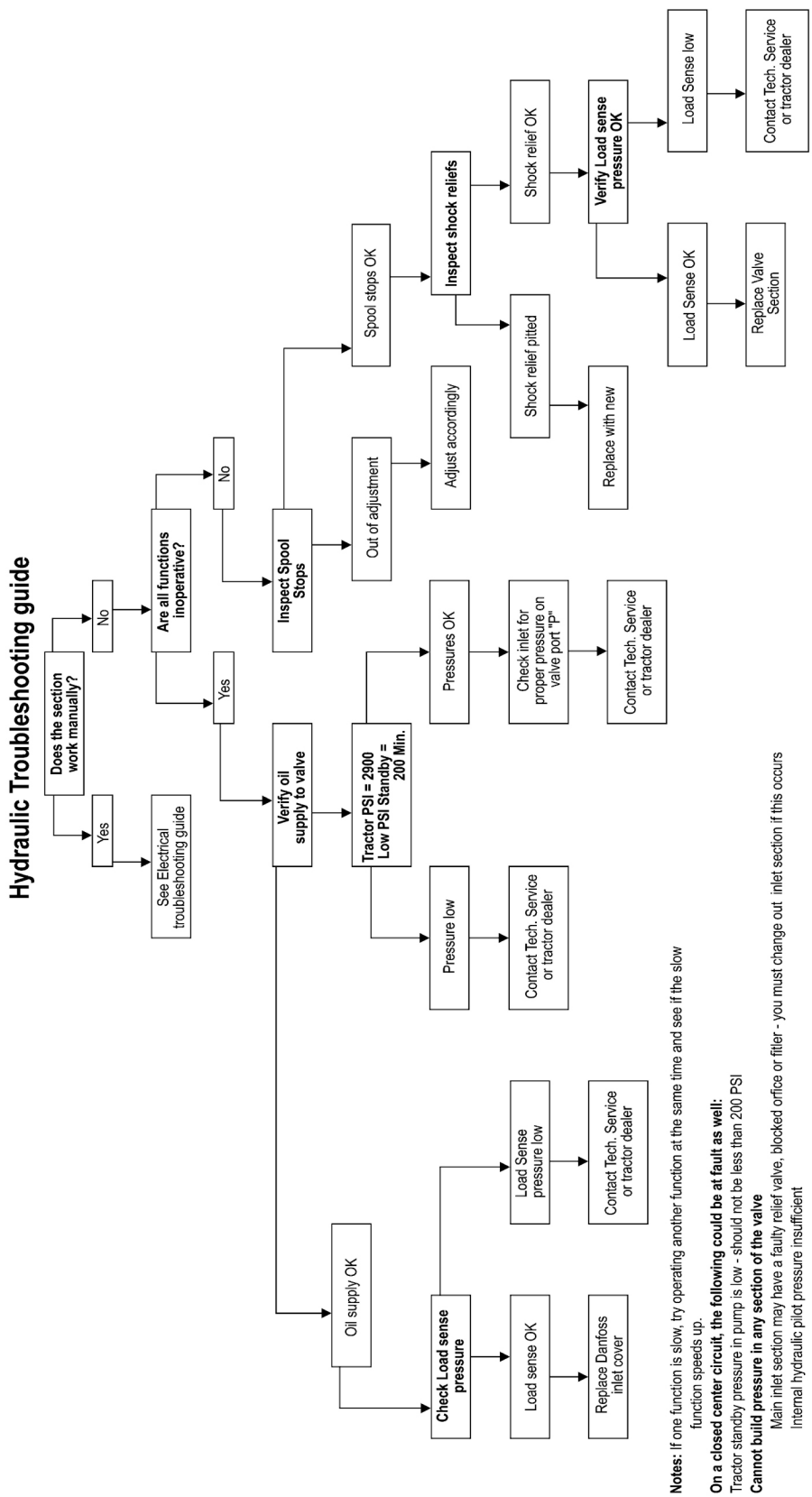

COMMON BENGAL T4

©2015 Alamo Group Inc.

JOYSTICK TROUBLESHOOTING

Boom operation not responding to joystick movement.

Isolate hydraulic vs. electronic symptom.

Turn off electronic master switch (preventing electronic actuator on valve from attempting to hold spool in neutral position). With tractor engine running, operate the valve section with the manual handle. If function operates normally, continue with electronic inspection. If function does not operate normally, continue with hydraulic inspection.

Electronic inspection.

Connect a voltmeter to the cable connector of the valve section that is not operating. This will allow you to measure supply and signal voltage when the joystick is operated.

Main, Secondary, and Swivel Valves – signal voltage should be 50% of supply voltage with joystick in Neutral position, up to 75% of supply voltage in B direction, down to 25% of supply voltage in A direction. Signal voltage should change smoothly with lever movement.
Pin #1 – Signal Voltage, Pin #4 – Power Voltage, Pin #3 – Ground

Deck Roll Valve or Float Valve – signal voltage should be 50% of supply voltage with joystick in Neutral position, up to 65% of supply voltage in B direction, down to 35% of supply voltage in A direction. Signal voltage should change smoothly with lever movement. Signal voltage should be approximately 75% of supply voltage when float switch is operated.
Pin #1 – Signal Voltage, Pin #4 – Power Voltage, Pin #3 – Ground

Shield Valve or On/Off Valve – Voltage on pin #1 should be equal to supply voltage when switch is operated in A direction. Voltage on pin #4 should be equal to supply voltage when switch is operated in B direction.
Pin #1 – Signal Voltage (Shield Open), Pin #4 – Signal Voltage (Shield Close), Pin #3 – Ground

If none of the valve will operate with electrical signal, verify that there is oil pressure at the valve inlet. Electrical Valves must have pilot supply oil to move the spools.

Possible electronic problems.

Open circuit (broken wire, bad connection or loose connection in switchbox).
Shorted to positive, ground, or other.
Incorrect voltage signal from joystick.

Continued on next sheet

©2015 Alamo Group Inc.

Hydraulic inspection.

Install 3 pressure gauges, on the valve inlet (use M port, or tee into hose supplying oil from the pump to the inlet), on the workport that is not operating, and on the LS port.

With the spools in Neutral

Gear pump – P should be approximately 200 psi, LS = 0, workport – pressure on cylinder or function.
LS pump – P should equal pump standby pressure, LS = 0, workport – pressure on cylinder or function.
Pressure Comp pump – P should equal pump standby pressure, LS = 0, workport – pressure on cylinder or function.

Gear pump – P should be approximately 200 psi higher than LS, LS should equal workport, workport – pressure on cylinder or function.
LS pump – P should be LS + standby, LS should equal workport, workport – pressure on cylinder or function.
Pressure Comp pump – P should equal pump standby pressure, LS should equal workport, workport – pressure on cylinder or function.

Operate one spool, measure pressures with function at end of travel or stop

Gear pump – P should equal valve relief setting or workport shock valve setting. LS should equal workport. Workport should equal relief setting or workport shock valve setting.
LS pump – P should equal valve relief setting, pump max pressure setting, or workport shock valve setting. LS should equal workport. Workport should equal relief setting, pump max pressure setting, or workport shock valve setting.
Pressure Comp pump – P should equal pump standby pressure, LS should equal workport. Workport should equal pump standby pressure or workport shock valve setting.

Operate more than one spool.

Gear pump – P should approximately 200 psi higher than LS. LS should equal highest workport pressure. Workport – pressure on cylinder or function.
LS pump – P should be LS + standby pressure. LS should equal highest workport pressure. Workport – pressure on cylinder or function.
Pressure Comp pump. P should equal pump standby pressure. LS should equal highest workport pressure. Workport – pressure on cylinder or function.

Possible hydraulic problems.

Cylinder leak.
LS signal leaking to tank before reaching pump LS port.
Hydraulic system or pump not supplying flow to valve.

©2015 Alamo Group Inc.

WHEEL WEIGHT - BENGAL 18

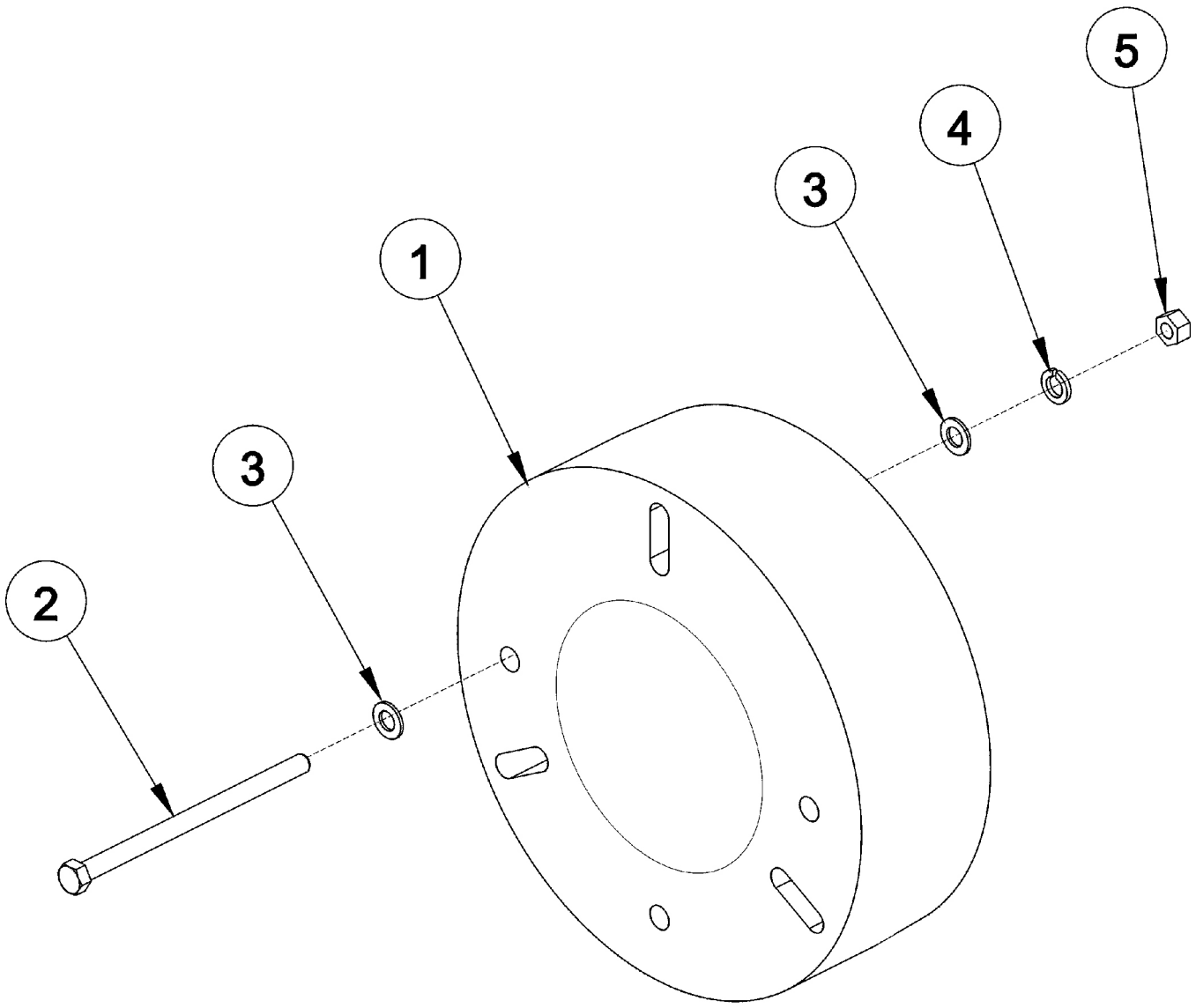

ITEM	PART NO.	QTY.	DESCRIPTION
1	30687	1	500# WHEEL WEIGHT
2	21956	4	CAPSCREW,3/4" X 13",NC
3	22021	8	FLATWASHER,3/4"
4	21993	4	LOCKWASHER,3/4"
5	21825	4	HEX NUT,3/4",NC

COMMON BENGAL T4

WETCUT SECTION

©2014 Alamo Group Inc.

WETCUT 50 GALLON TANK - 3PNT MOUNT

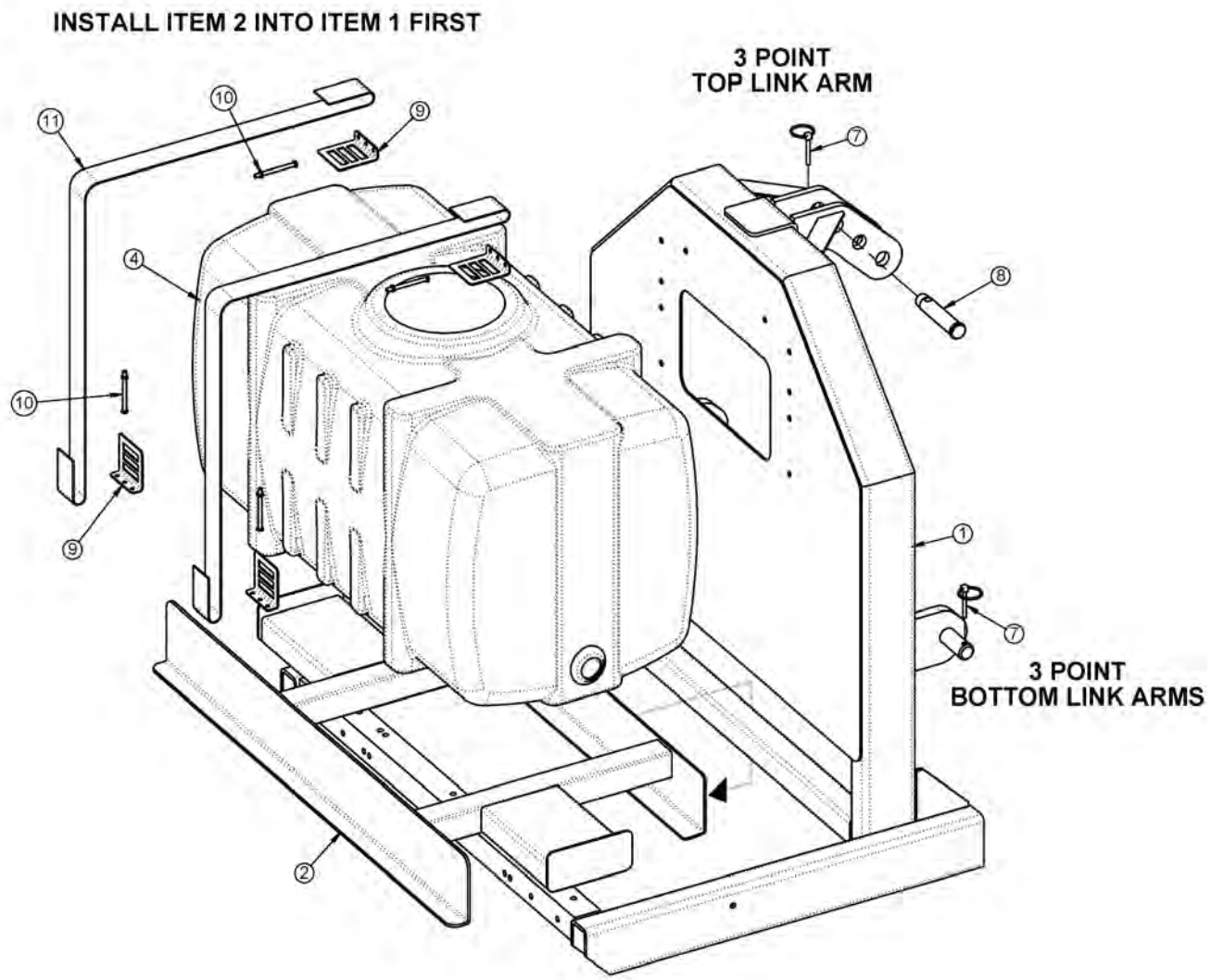

ITEM	PART NO.	QTY.	DESCRIPTION
1	06370128	1	MNT,3PNT,UNI
2	06370136	1	MNT,TANK,50GAL,WETCUT
4	06520342	1	TANK,50GA.,WETCUT
7	RD1032	3	PIN,LYNCH 1/4" X 2"
8	TB1036	1	PIN,SEC BOOM SWIV 1X4-11/16"
9	06520343	4	ANCHOR,STRAP,WETCUT
10	06520344	4	BOLT,STRAP,TANK,WETCUT
11	06520345	2	STRAP,TANK,WETCUT

COMMON SABER

©2014 Alamo Group Inc.

WETCUT 100 OR 150 GALLON TANK - 3PNT MOUNT

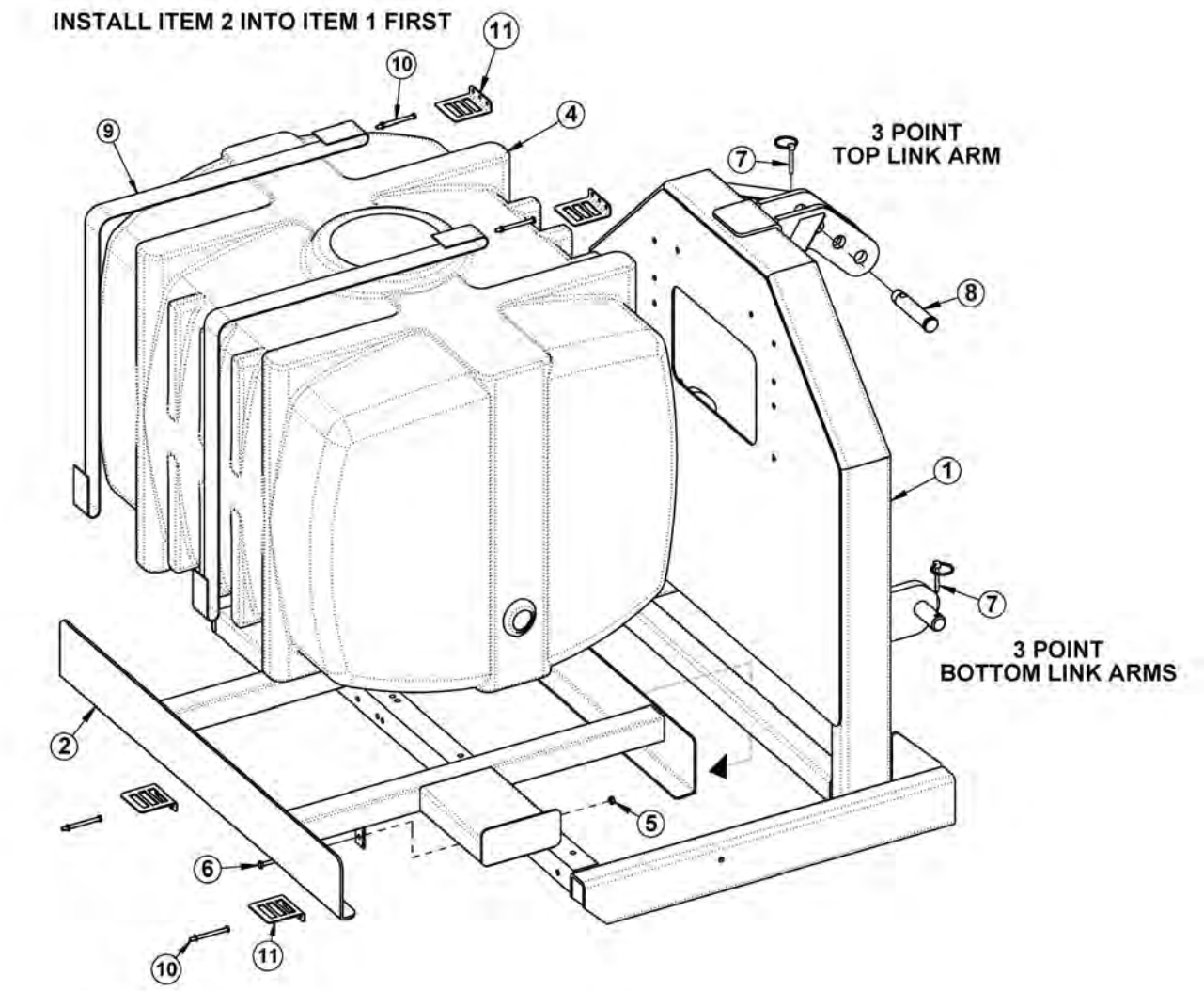

ITEM	PART NO.	QTY.	DESCRIPTION
1	06370128	1	MNT,3PNT,UNI
2	06370138	1	MNT,TANK,100GAL,WETCUT
------	06370139	-	MNT,TANK,150GAL,WETCUT
4	06520372	1	TANK,100GA.,WETCUT
------	06520373	-	TANK,150GA.,WETCUT
5	21527	2	HEX NUT,NYLOCK,1/4" NC
6	21530	2	CAPSCREW,1/4" X 1" NC
7	RD1032	3	PIN,LYNCH 1/4" X 2"
8	TB1036	1	PIN,SEC BOOM SWIV 1X4-11/16"
9	06520345	2	STRAP,TANK,WETCUT
10	06520344	4	BOLT,STRAP,TANK,WETCUT
11	06520343	4	ANCHOR,STRAP,WETCUT

COMMON SABER

©2014 Alamo Group Inc.

WETCUT 3PNT PLUMBING - 50IN MOWERS

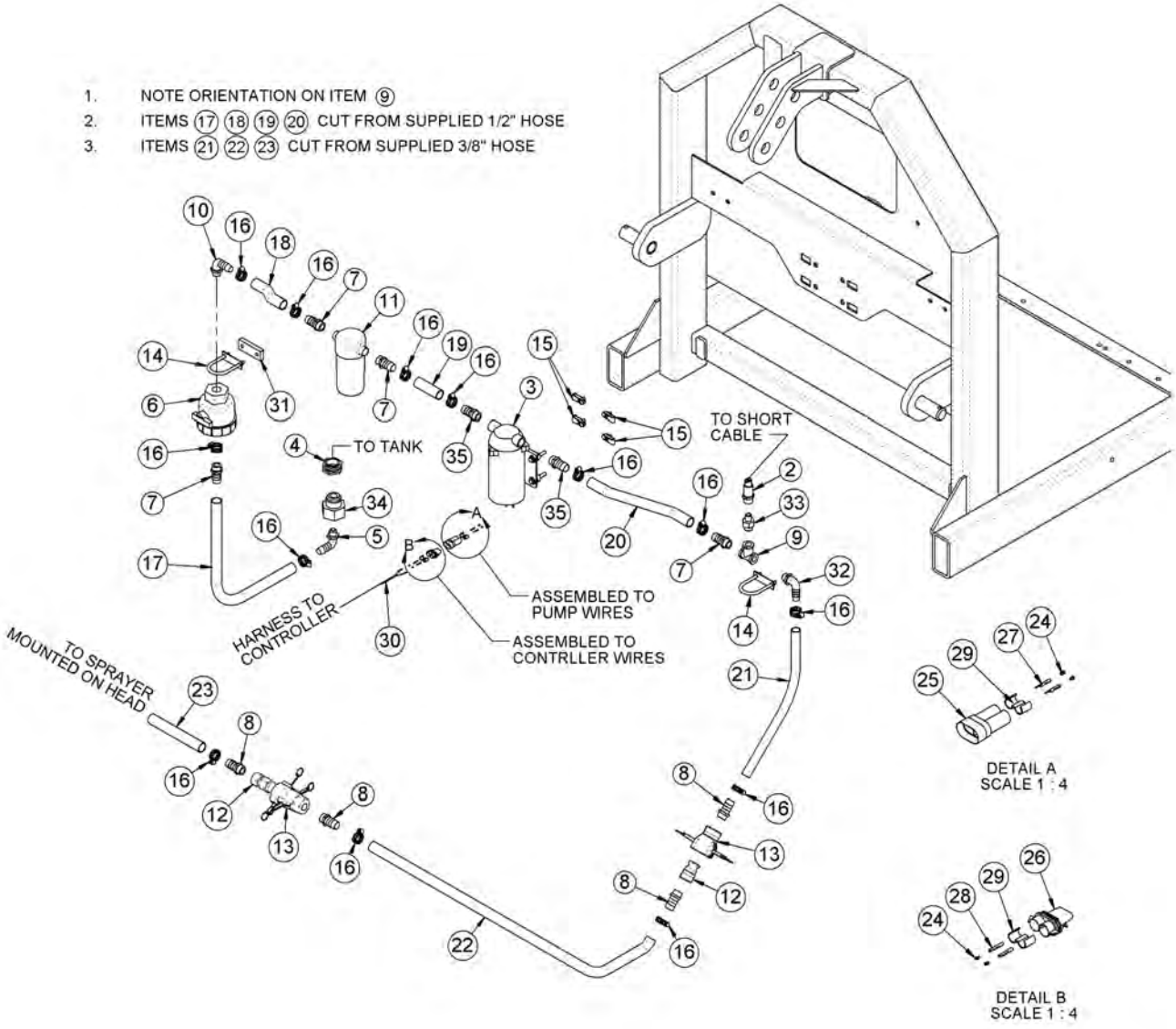

COMMON SABER

Continued...

ITEM	PART NO.	QTY.	DESCRIPTION
1	06370128	1	MNT,3PNT,UNI
2	06520336	1	CNTRLR,SENSOR,06520333
3	06520341	1	PUMP,WETCUT
4	06520346	1	FITTING,BULKHEAD,WETCUT (50 GALLON TANKS ONLY)
5	06520347	1	FITTING,ELBOW,WETCUT
6	06520348	1	VLV,BALL,WETCUT
7	06520349	4	FITTING,BARB,HOSE,WETCUT
8	06503173	4	FITTING,1/2MP X 3/8"BARB
9	06520353	1	FITTING,TEE,WETCUT
10	06520367	1	ELBOW,1/2" X 1/2"BARB,POLY
11	06520361	1	FILTER,FIRE KIT,RAILKUT
12	06520400	2	QUIK CPLR,MALE,1/2",WETCUT
13	06520401	2	QUIK CPLR,FEM,1/2",WETCUT
14	27329	2	U-BOLT,1/4" X 1" X 2"
15	35176	4	U-NUT,1/4",3/4" TO CENTER
16	35091	13	CLAMP, HOSE #6
17 - 20	06520469	5	1/2" HOSE (FEET)
21 - 23	06520316	-	3/8" HOSE (INCLUDED WITH SPRAYER)
24	06510051	4	SEAL,16-18GA,METPAK
25	06510052	1	CONN.,BODY,MALE,METRIPACK 150
26	06510053	1	CONN.,BODY,FEM,METRIPACK 150
27	06510054	2	TERMINAL,MALE,16/18GA.METPAK
28	06510055	2	TERMINAL,FEM,16/18GA.METPAK
29	06510056	2	TPA
30	06520337	1	INCLUDED WITH CONTROLLER
31	06401133	1	SPACER,Ø.31" X 1.75" X .38"
32	06503165	1	ELBOW,1/2"MP X 3/8"BARB
33	06520354	1	BUSHING,REDUCER,WETCUT
34	06503169	1	BUSHING,1"MP X 1/2"FP (100 & 150 GALLON TANKS ONLY)
35	06503176	2	FITTING,BARB,3/8"MP X 1/2"BARB

©2014 Alamo Group Inc.

WETCUT 3PNT PLUMBING - LARGE MOWERS

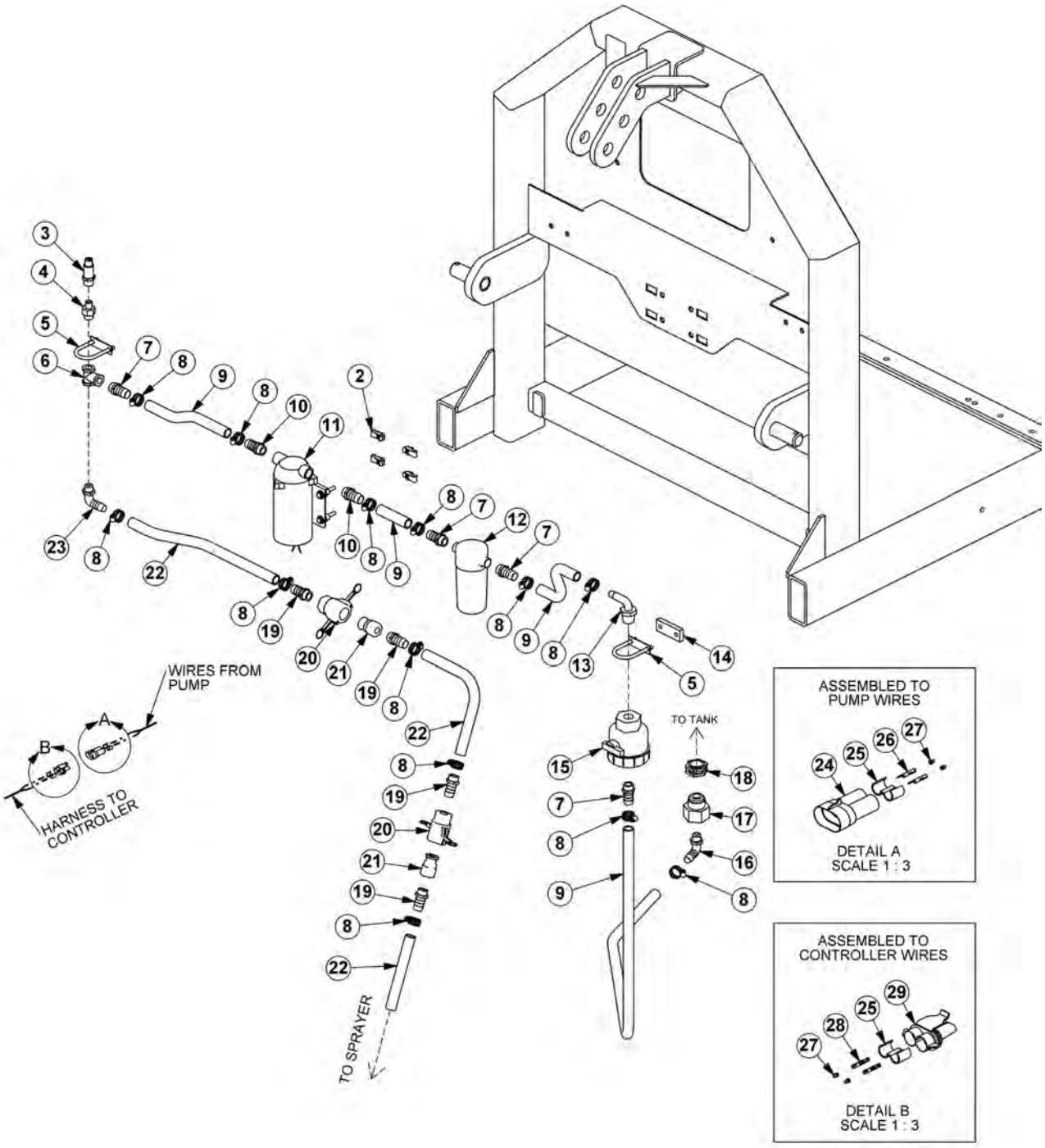

COMMON SABER

WETCUT 3PNT PLUMBING - LARGE MOWERS

Continued...

ITEM	PART NO.	QTY.	DESCRIPTION
1	06370128	1	MNT,3PNT,UNI
2	35176	4	U-NUT,1/4,3/4 TO CENTER
3	06520336	1	CNTRLR,SENSOR,06520333
4	06520354	1	BUSHING,REDUCER,WETCUT
5	27329	2	U-BOLT,1/4" X 1" X 2"
6	06520353	1	FITTING,TEE,WETCUT
7	06520349	4	FITTING,BARB,HOSE,WETCUT
8	35091	13	CLAMP, HOSE #6
9	06520469	5	1/2" HOSE (FEET)
10	06503168	2	SWIVEL,1/2" STR
11	06520359	1	PUMP,LARGE
12	06520361	1	FILTER,FIRE KIT,RAILKUT
---	06520351	1	STRAINER,40MESH
13	06520367	1	ELBOW,1/2X1/2BARB,POLY
14	06401133	1	SPACER,Ø.31X1.75X.38
15	06520348	1	VLV,BALL,WETCUT
16	06520347	1	FITTING,ELBOW,WETCUT
17	06503169	1	BUSHING,1MPX1/2FP (100 & 150 GALLON TANKS ONLY)
18	06520346	1	FITTING,BULKHEAD,WETCUT (50 GALLON TANKS ONLY)
19	06503173	4	FITTING,BARB,1/2X3/8,WETCUT
20	06520401	2	QUIK CPLR,FEM,1/2,WETCUT
21	06520400	2	QUIK CPLR,MALE,1/2,WETCUT
22	06520316	-	3/8" HOSE (INCLUDED WITH SPRAYER)
23	06503165	1	ELBOW,1/2X3/8BARB,POLY
24	06510052	1	CONN.,BODY,MALE,METRIPACK 150
25	06510056	2	TPA
26	06510054	2	TERMINAL,MALE,16/18GA.METPAK
27	06510051	4	SEAL,16-18GA,METPAK
28	06510055	2	TERMINAL,FEM,16/18GA.METPAK
29	06510053	1	CONN.,BODY,FEM,METRIPACK 150

COMMON SABER

©2014 Alamo Group Inc.

WETCUT FRONT PLUMBING - 50IN MOWERS

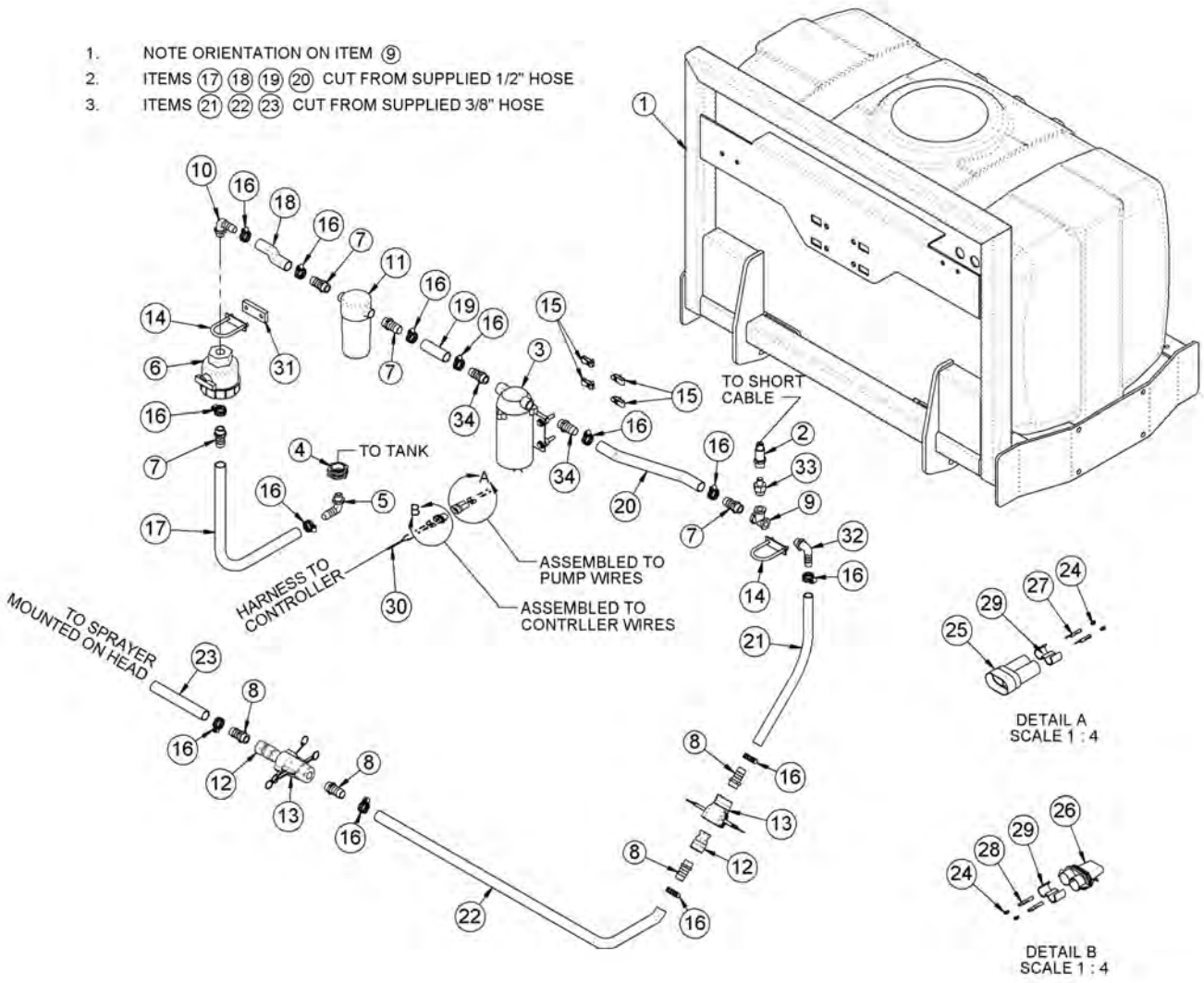

COMMON SABER

Continued...

ITEM	PART NO.	QTY.	DESCRIPTION
1	06370204	1	MNT,FRONT,UNI
2	06520336	1	CNTRLR,SENSOR,06520333
3	06520341	1	PUMP,WETCUT
4	06520346	1	FITTING,BULKHEAD,WETCUT
5	06520347	1	FITTING,ELBOW,WETCUT
6	06520348	1	VLV,BALL,WETCUT
7	06520349	4	FITTING,BARB,HOSE,WETCUT
8	06503173	4	FITTING,1/2"MP X 3/8"BARB
9	06520353	1	FITTING,TEE,WETCUT
10	06520367	1	ELBOW,1/2"MP X 1/2"BARB,POLY
11	06520361	1	FILTER,FIRE KIT,RAILKUT
---	06520351	1	STRAINER,40MESH
12	06520400	2	QUIK CPLR,MALE,1/2",WETCUT
13	06520401	2	QUIK CPLR,FEM,1/2",WETCUT
14	27329	2	U-BOLT,1/4" X 1" X 2"
15	35176	4	U-NUT,1/4",3/4" TO CENTER
16	35091	13	CLAMP,HOSE #6
17 - 20	06520469	5	1/2" HOSE (FEET)
21 - 23	06520316	-	3/8" HOSE (INCLUDED WITH SPRAYER)
24	06510051	4	SEAL,16-18GA,METPAK
25	06510052	1	CONN.,BODY,MALE,METRIPACK 150
26	06510053	1	CONN.,BODY,FEM,METRIPACK 150
27	06510054	2	TERMINAL,MALE,16/18GA.METPAK
28	06510055	2	TERMINAL,FEM,16/18GA.METPAK
29	06510056	2	TPA
30	06520337	1	INCLUDED WITH CONTROLLER
31	06401133	1	SPACER,Ø.31" X 1.75" X .38"
32	06503165	1	ELBOW,1/2"MP X 3/8"BARB,POLY
33	06520354	1	BUSHING,REDUCER,WETCUT
34	06503176	2	FITTING,3/8"MP X 1/2"BARB

©2014 Alamo Group Inc.

WETCUT FRONT PLUMBING - LARGER MOWERS

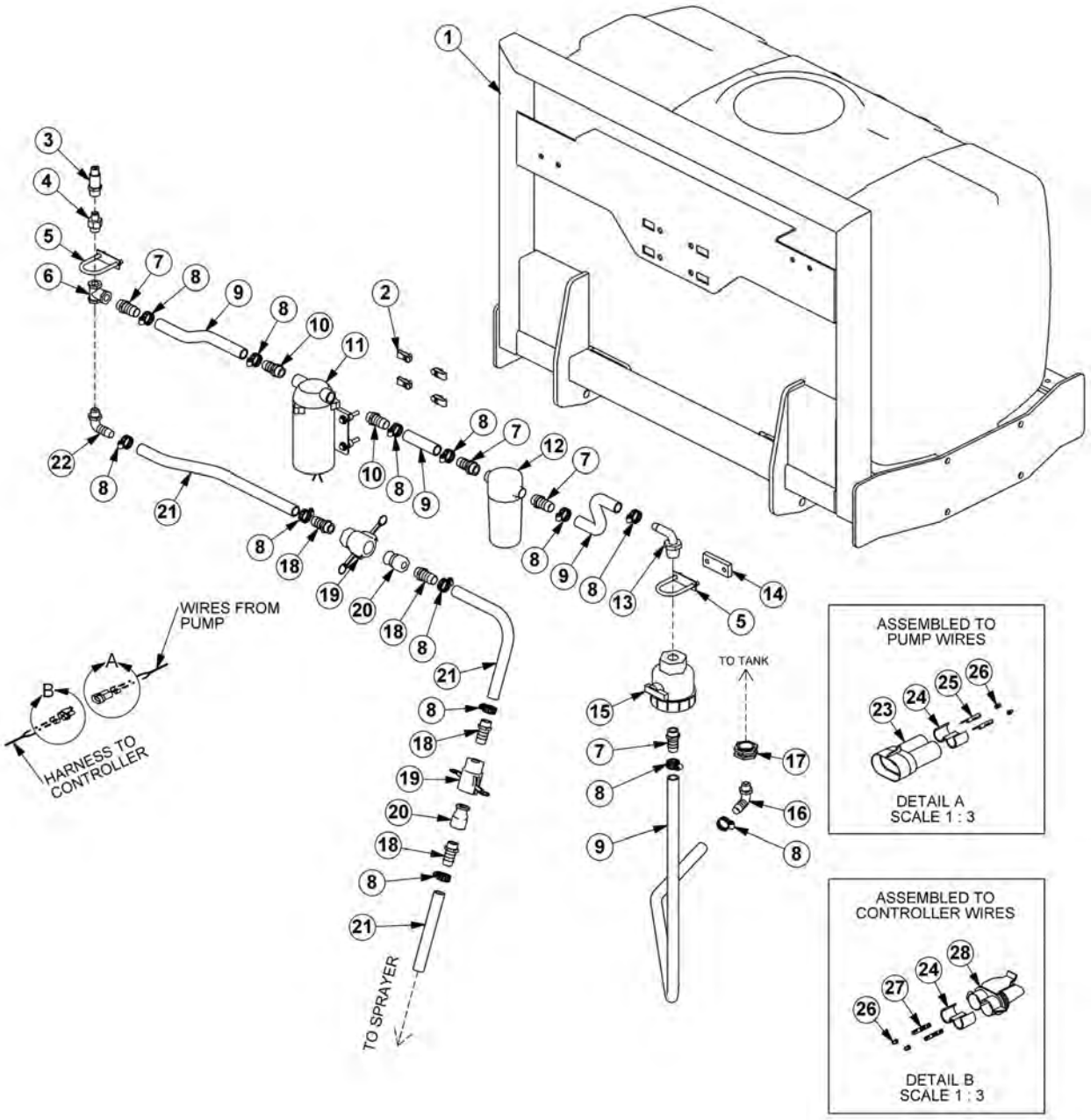

COMMON SABER

WETCUT FRONT PLUMBING - LARGER MOWERS

Continued...

ITEM	PART NO.	QTY.	DESCRIPTION
1	06370204	1	MNT,FRONT,UNIV
2	35176	4	U-NUT,1/4,3/4 TO CENTER
3	06520336	1	CNTRLR,SENSOR,06520333
4	06520354	1	BUSHING,REDUCER,WETCUT
5	27329	2	U-BOLT,1/4" X 1" X 2"
6	06520353	1	FITTING,TEE,WETCUT
7	06520349	4	FITTING,BARB,HOSE,WETCUT
8	35091	13	CLAMP, HOSE #6
9	06520469	5	1/2" HOSE (FEET)
10	06503168	2	SWIVEL,1/2" STR
11	06520359	1	PUMP,LARGE
12	06520361	1	FILTER,FIRE KIT,RAILKUT
---	06520351	1	STRAINER,40MESH
13	06520367	1	ELBOW,1/2X1/2BARB,POLY
14	06401133	1	SPACER,Ø.31X1.75X.38
15	06520348	1	VLV,BALL,WETCUT
16	06520347	1	FITTING,ELBOW,WETCUT
17	06520346	1	FITTING,BULKHEAD,WETCUT
18	06503173	4	FITTING,BARB,1/2X3/8,WETCUT
19	06520401	2	QUIK CPLR,FEM,1/2,WETCUT
20	06520400	2	QUIK CPLR,MALE,1/2,WETCUT
21	06520316	-	3/8" HOSE (INCLUDED WITH SPRAYER)
22	06503165	1	ELBOW,1/2X3/8BARB,POLY
23	06510052	1	CONN.,BODY,MALE,METRIPACK 150
24	06510056	2	TPA
25	06510054	2	TERMINAL,MALE,16/18GA.METPAK
26	06510051	4	SEAL,16-18GA,METPAK
27	06510055	2	TERMINAL,FEM,16/18GA.METPAK
28	06510053	1	CONN.,BODY,FEM,METRIPACK 150

COMMON SABER

©2014 Alamo Group Inc.

WETCUT 50IN SPRAYER HEAD ASSEMBLY

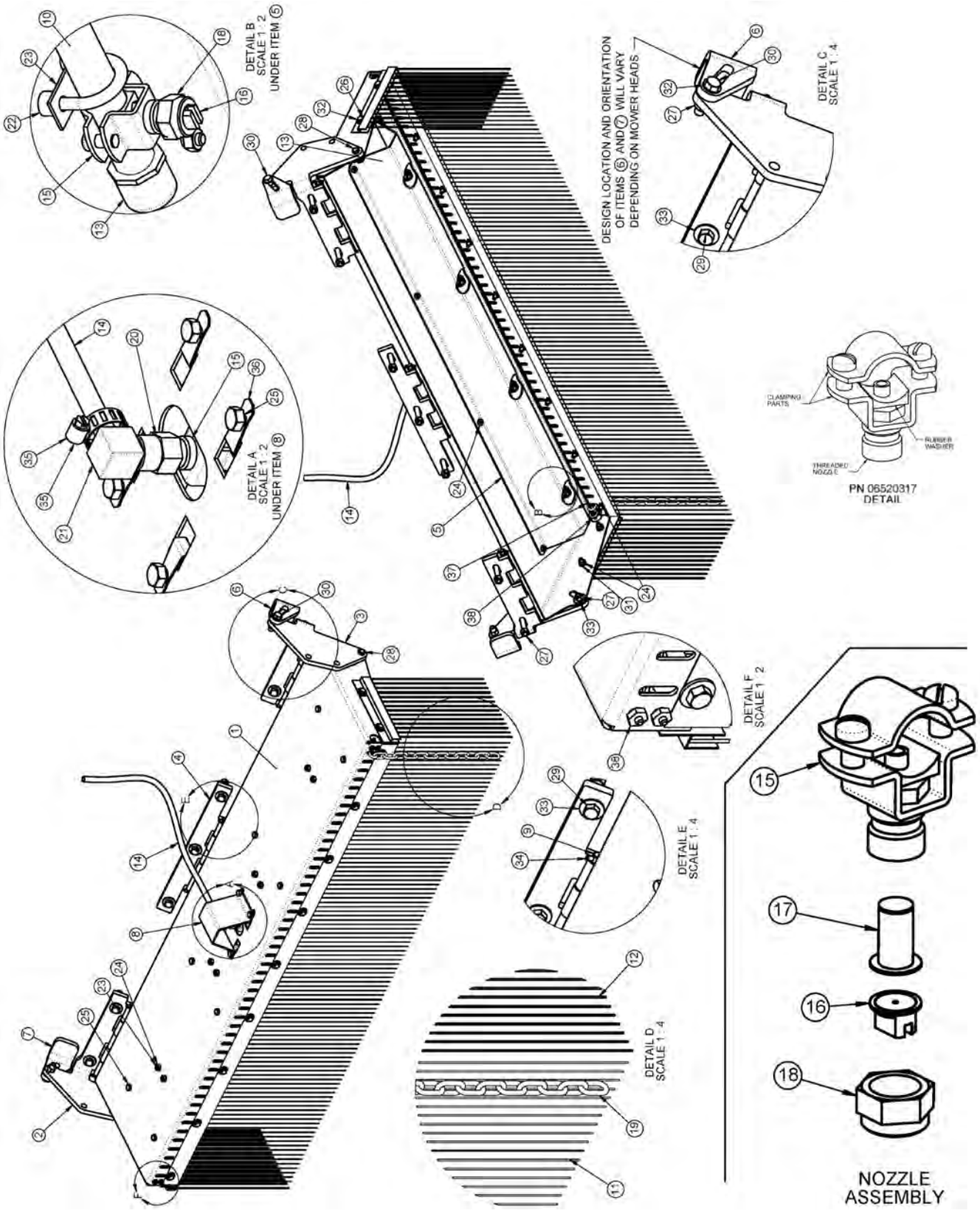

COMMON SABER

WETCUT 50IN SPRAYER HEAD ASSEMBLY

Continued...

ITEM	PART NO.	QTY.	DESCRIPTION
1	06370105	1	HOOD,SPRAYER
2	06370106	1	HINGE,LH,SPRAYER
3	06370107	1	HINGE,RH,SPRAYER
4	06370108	1	HINGE,CNTR,SPRAYER
5	06410668	1	GUARD,SPRAYER,WETCUT
6	06410753	1	MNT,RH,WET CUT (FLAIL)
---	06410942	1	MNT,RH,WET CUT (ROTARY)
7	06410754	1	MNT,LH,WET CUT (FLAIL)
---	06410943	1	MNT,LH,WET CUT (ROTARY)
8	06410796	1	GUARD,HOSE,WETCUT
9	06420069	3	PIN,HINGE,WET CUT
10	06497003	1	TUBE,LG,SPRAYER
11	06499012	1	SKIRT,ANTI SPRAY,50
12	06499013	2	SKIRT,ANTI SPRAY,7
13	06520314	2	TUBE,CAP,SPRAYER
14	06520316	15	HOSE,SPRAYER (FEET)
15	06520317	5	NOZZLE,SPRAYER
16	06520319	4	TIP,NOZZLE,SPRAYER
17	06520320	4	FILTER,NOZZLE,SPRAYER
18	06520321	4	NUT,NOZZLE,SPRAYER
19	06520322	49	CHAIN,.18" X 1.31" X 13LINKS
20	06520381	1	ADAPTER,1/4"NPT,WETCUT
21	06520382	1	ELBOW,BARB,3/8" X 1/4"NPT
22	06520383	8	SPACER,.50"O.D. X .252"I.D. X .38",NYLON
23	32550	4	U-BOLT,1/4" X 1" X 1" X 1-3/4"
24	21527	29	HEX NUT,NYLOCK,1/4",NC
25	21528	12	CAPSCREW,1/4" X 1/2",NC
26	21529	13	CAPSCREW,1/4" X 3/4",NC
27	21625	11	HEX NUT,3/8",NC
28	21630	2	CAPSCREW,3/8" X 1",NC
29	21634	7	CAPSCREW,3/8" X 2",NC
30	21632	2	CAPSCREW,3/8" X 1-1/2",NC
31	21986	4	LOCKWASHER,1/4"
32	22014	15	FLATWASHER,1/4"
33	22016	9	FLATWASHER,3/8",GR8
34	34698	6	ROLL PIN, PLAIN, 3/16" X 7/8"
35	35091	1	CLAMP,HOSE #6
36	35176	4	U-NUT,1/4",3/4" TO CENTER
37	06520376	5	CABLE,3/16"
38	06537022	2	U-BOLT,CABLE,3/16"

COMMON SABER

©2014 Alamo Group Inc.

WETCUT 60IN SPRAYER HEAD ASSEMBLY

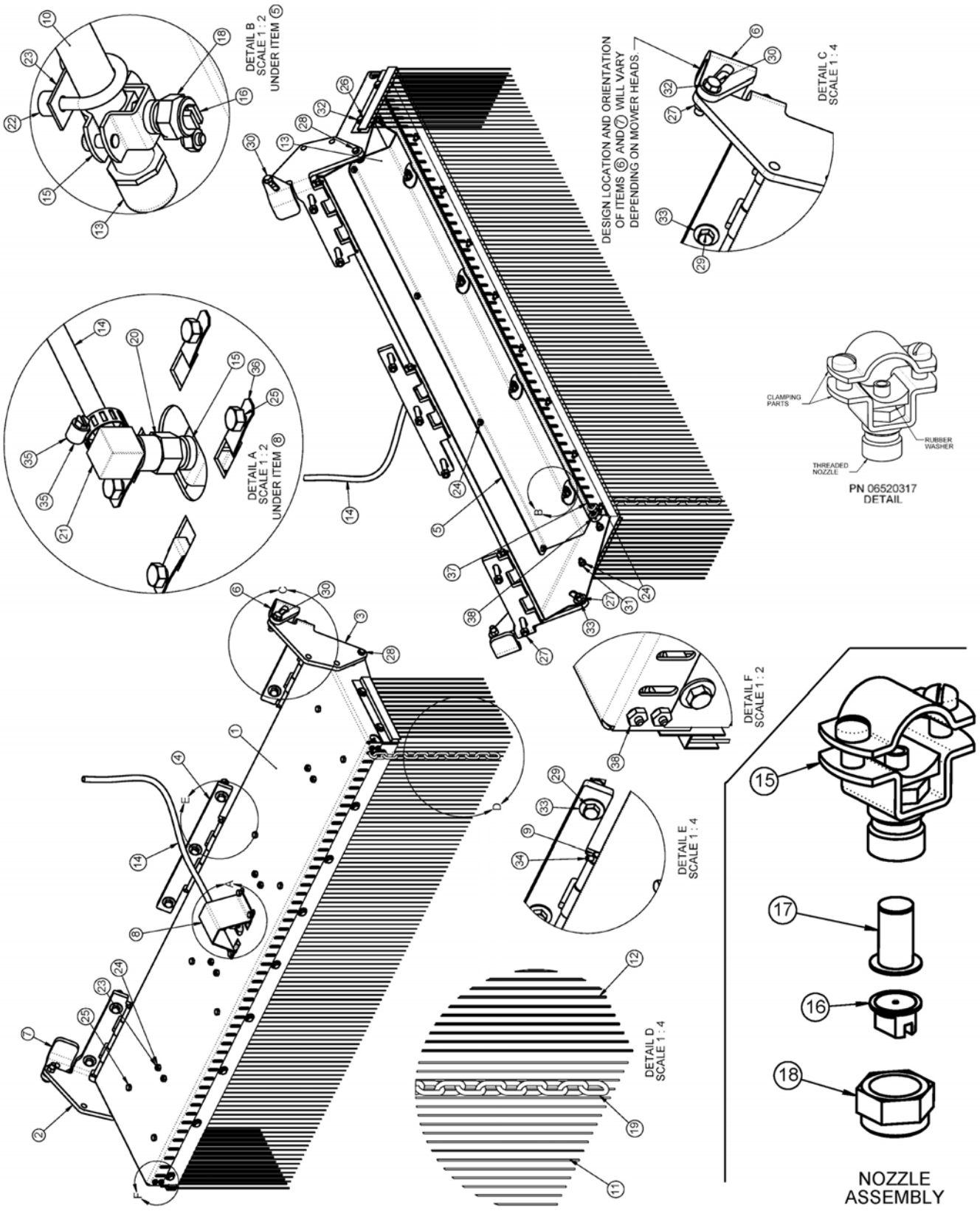

COMMON SABER

WETCUT 60IN SPRAYER HEAD ASSEMBLY

Continued...

ITEM	PART NO.	QTY.	DESCRIPTION
1	06370210	1	HOOD,SPRAYER
2	06370106	1	HINGE,LH,SPRAYER
3	06370107	1	HINGE,RH,SPRAYER
4	06370108	1	HINGE,CNTR,SPRAYER
5	06411234	1	GUARD,SPRAYER,WETCUT
6	06410753	1	MNT,RH,WET CUT (FLAIL)
---	06410942	1	MNT,RH,WET CUT (ROTARY)
7	06410754	1	MNT,LH,WET CUT (FLAIL)
---	06410943	1	MNT,LH,WET CUT (ROTARY)
8	06410796	1	GUARD,HOSE,WETCUT
9	06420069	3	PIN,HINGE,WET CUT
10	06497009	1	TUBE,LG,SPRAYER
11	06499018	1	SKIRT,ANTI SPRAY,60
12	06499013	2	SKIRT,ANTI SPRAY,7
13	06520314	2	TUBE,CAP,SPRAYER
14	06520316	15	HOSE,SPRAYER (FEET)
15	06520317	6	NOZZLE,SPRAYER
16	06520319	5	TIP,NOZZLE,SPRAYER
17	06520320	5	FILTER,NOZZLE,SPRAYER
18	06520321	5	NUT,NOZZLE,SPRAYER
19	06520322	61	CHAIN,.18" X 1.31" X 13LINKS
20	06520381	1	ADAPTER,1/4"NPT,WETCUT
21	06520382	1	ELBOW,BARB,3/8" X 1/4"NPT
22	06520383	10	SPACER,.50"O.D. X .252"I.D. X .38",NYLON
23	32550	5	U-BOLT,1/4" X 1" X 1" X 1-3/4"
24	21527	33	HEX NUT,NYLOCK,1/4",NC
25	21528	15	CAPSCREW,1/4" X 1/2",NC
26	21529	13	CAPSCREW,1/4" X 3/4",NC
27	21625	13	HEX NUT,3/8",NC
28	21630	2	CAPSCREW,3/8" X 1",NC
29	21634	7	CAPSCREW,3/8" X 2",NC
30	21632	4	CAPSCREW,3/8" X 1-1/2",NC
31	21986	4	LOCKWASHER,1/4"
32	22014	33	FLATWASHER,1/4"
33	22016	11	FLATWASHER,3/8",GR8
34	34698	6	ROLL PIN, PLAIN, 3/16" X 7/8"
35	35091	1	CLAMP,HOSE #6
36	35176	4	U-NUT,1/4",3/4" TO CENTER
37	06520376	6	CABLE,3/16" (FEET)
38	06537022	2	U-BOLT,CABLE,3/16"

COMMON SABER

©2014 Alamo Group Inc.

WETCUT CABLES

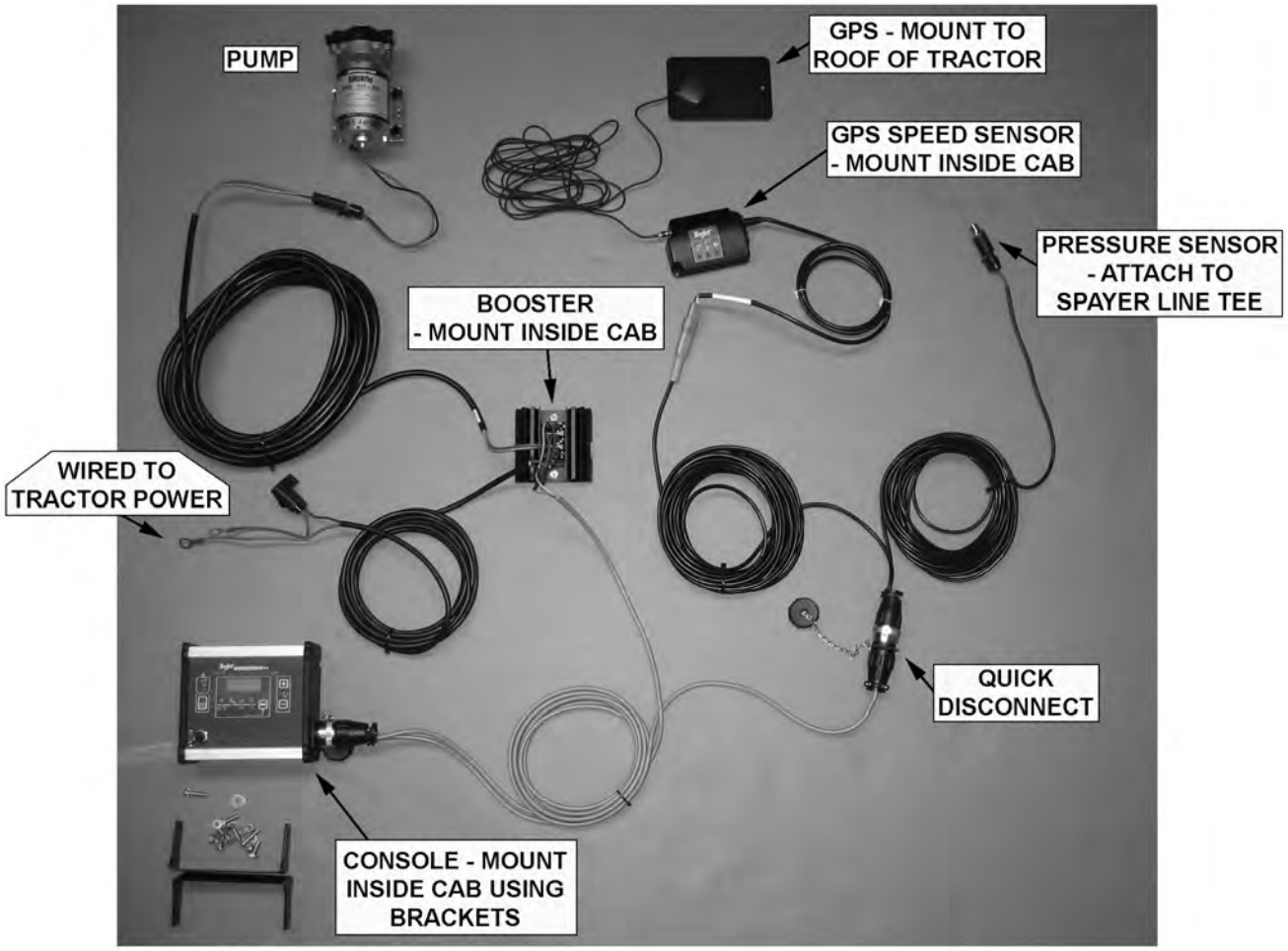

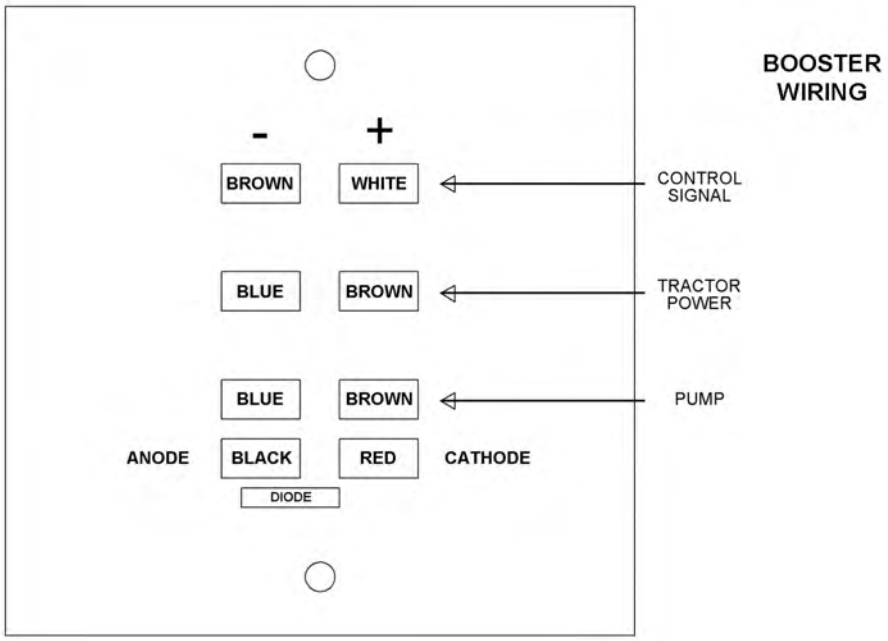

COMMON SABER

WARRANTY SECTION

WARRANTY INFORMATION

Tiger Corporation, 3301 N. Louise, Sioux Falls, South Dakota, warrants to the original Retail Customer, the new Tiger equipment is free of defects in material and workmanship. Any part of equipment that in Tiger's judgement, show evidence of such defects will be repaired or replaced without charge, provided that the failure of part(s) shall have occurred within twelve (12) months from the date of delivery of said equipment to the Retail Customer. Expendable components such as knives, oil, chain sprockets, skid shoes, knife mounting disks and the like are excluded but not limited to this warranty.

The Retail Customer must pay the transportation cost to and from the Tiger Dealer's service shop for warranty service. Warranty service will be performed by the Tiger Dealer from whom the equipment was purchased, during service shop regularly scheduled days and hours of operation.

All Tiger obligation under this warranty shall be terminated if the equipment is modified or altered in ways not approved in writing by Tiger, if repair parts other than genuine Tiger repair parts have been used, or if the equipment has been subject to misuse, neglect, accident, improper maintenance or improper operation.

Tiger Corporation reserves the right to make improvements in design or changes in specification at any time without incurring any obligation to owners of equipment previously sold.

No agent or person has authority to alter, add to or waive the above warranties which are agreed to be in the only warranties, representations or promises, expressed or implied, as to the quality or performance of the products covered and which do not include any implied warranty of merchantability or fitness. In no event will Tiger be liable for incidental or consequential damages or injuries, including, but not limited to, loss of profits, rental or substitute equipment or other commercial loss.

THERE ARE NO WARRANTIES WHICH EXTEND BEYOND THOSE EXPRESSED HEREIN.

It is the Purchasers obligation to sign the warranty registration form **AFTER** he / she has Read and Understands the Operation and Safety Instructions stated within this manual.

ONE LAST WORD

This manual cannot possibly cover all of the potentially hazardous situations you will encounter. By being familiar with the safety rules, operating and maintenance instructions in this manual you can help prevent accidents. The objective of this manual is to help make you a better operator. Remember, **SAFETY IS YOU!**

Your safety and the safety of those around you depends on **YOU**. Common sense should play a large role in the operation of this machine.

Since we at Tiger Corporation are constantly striving to improve out products, we reserve the right to change specifications or design at any time.

TO THE OWNER / OPERATOR / DEALER

To keep your implement running efficiently and safely, read your manual thoroughly and follow these directions and the Safety Messages in this manual and on the machine. The table of contents clearly identifies each section where you can easily find the information you need.

The Occupational Safety and Health Act (OSHA 1928.51 subpart C) makes the following minimum requirements for tractor operators.

OWNER REQUIREMENTS:

1. Provide a Roll-Over-Protective Structure that meets the requirements of this Standard; and
2. Provide Seatbelts that meet the requirements of this Standard and SAE J3C; and
3. Ensure that each employee uses such Seatbelt while the tractor is moving; and
4. Ensure that each employee tightens the Seatbelt sufficiently to confine the employee to the protected area provided by the ROPS.

OPERATOR REQUIREMENTS:

1. Securely fasten seatbelt it the tractor has a ROPS.
2. Where possible, avoid operating the tractor near steep ditches, embankments, and holes.
3. Reduce speed when turning, crossing slopes, and on rough, slick, or muddy surfaces.
4. Stay off slopes too steep for safe operation.
5. Watch where you are going – especially at row ends, on roads, and around trees.
6. Do Not permit others to ride.
7. Operate the tractor smoothly – no jerky turns, starts, or stops.
8. Hitch only to the draw-bar and hitch points recommended by the tractor manufacturer.
9. When the tractor is stopped, set brakes securely and use park lock, if available

Printed in USA
© Tiger Corporation