SABER MOWER

NEW HOLLAND T6000

Current as of 07/18/2013

PARTS LISTING WITH
MOUNTING AND OPERATING
INSTRUCTIONS

Tiger Corporation
3301 N. Louise Ave.
Sioux Falls, SD 57107
1-800-843-6849
1-605-336-7900
www.tiger-mowers.com

06022005

TO THE OWNER / OPERATOR / DEALER

All implements with moving parts are potentially hazardous. There is no substitute for a cautious, safe-minded operator who recognizes the potential hazards and follows reasonable safety practices. The manufacturer has designed this implement to be used with all its safety equipment properly attached to minimize the chance of accidents.

BEFORE YOU START!! Read the safety messages on the implement and shown in this manual. Observe the rules of safety and use common sense!

READ AND UNDERSTAND THIS MANUAL! Non–English speaking operators will need to GET THE MANUAL TRANSLATED as needed!

DANGER

FAILING TO FOLLOW SAFETY MESSAGES AND OPERATING INSTRUCTIONS CAN CAUSE SERIOUS BODILY INJURY OR EVEN DEATH TO OPERATOR AND OTHERS IN THE AREA.

1.

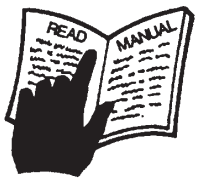

2. NO RIDERS. NO CHILDREN OPERATORS.

3. USE SAFETY SHOES, HARD HAT, SAFETY GLASSES, SEAT BELTS, ROPS & OPS

4. BLOCK UP SECURELY BEFORE WORKING UNDER.

1. Study and understand Operator's Manuals, Safety Decals, and Instructional Decals for tractor and implement to prevent misuse, abuse, and accidents. Practice before operating in a confined area or near passersby.
- Learn how to stop engine suddenly in an emergency. Be alert for passersby and especially children

2. Allow no children on or near folding mower or tractor. Allow no riders on tractor or implement. Falling off may cause serious injury or death from being run over by tractor or mower or contact with rotating blades.

3. Operate only with tractor having Roll-Over Protective Structure (ROPS) and with seat belt securely fastened to prevent injury and possible death from falling off or tractor overturn.
- Personal Protective Equipment such as Hard Hat, Safety Glasses, Safety Shoes, & Ear Plugs are recommended.

4. Block up or support raised machine and all lifted components securely before putting hands or feet under or working underneath any lifted component to prevent crushing injury or death from sudden dropping or inadvertent operation of controls. Make certain area is clear before lowering or folding

5. Before transporting, put Lift Lever in detent or full-lift position. Install Transport Safety Devices securely on folding mowers. Put Booms securely in Transport Rest.
- Folding and Boom Mowers have raised center of gravity. Slow down when turning and on hillsides.

6. Make certain that SMV sign, warning lights, and reflectors are clearly visible. Follow local traffic codes.

7. Never operate with Cutting Head or Folding Section raised if passersby, bystanders, or traffic are in the area to reduce possibility of injury or death from objects thrown by Blades under Guards or mower structure.

8. Before dismounting, secure implement in transport position or lower to ground.
- Put tractor in park or set brake, disengage PTO, stop engine, remove key, and wait until noise of rotation has ceased to prevent crushing by entanglement in rotating parts which could cause injury or death.
- Never mount or dismount a moving vehicle. Crushing from runover may cause serious injury or death.

5. TRANSPORT SAFELY, LOCK UP.

6. USE SMV, LIGHTS, & REFLECTORS.

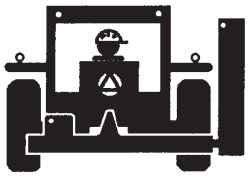

7. DO NOT OPERATE WITH CUTTER OR WING RAISED.

8. DO NOT MOUNT OR DISMOUNT WHILE MOVING.

02967827

Warranty Information: Read and understand the complete Warranty Statement found in this manual. Fill out the Warranty Registration form in full and return it within 90 days. Make certain the Serial Number of the machine is recorded on the Warranty Card, and form that you retain.

FORWARD

This manual contains information about many features of the Tiger mowing and roadside maintenance equipment. Some of these include: Safety precautions, Assembly instructions, Operations, Maintenance and Parts. This manual will also assist you in the proper break-in, daily care, and troubleshooting of your new mower.

We recommend that you read carefully the entire manual before operating the unit. Also, time spent in becoming fully acquainted with its performance features, adjustments, and maintenance schedules will be repaid in a long and satisfactory life of the equipment.

Troubleshooting - Please, before you call, help us to help you!
Please look at the equipment to observe what is happening, then:

- Classify the problem
  - Hydraulic, electrical or mechanical - Read the trouble shooting section
  - Tractor or Truck chassis - Contact vehicle dealer

- If unable to correct the problem yourself, contact your local Tiger Dealer after gathering:
  - Machine model _____
  - Serial number _____
  - Dealer name _____
  - Detailed information about the problem including results of troubleshooting

Attention Owner / Operator / Dealer: It is your obligation to read, and understand, the warranty information section located at the back of this manual denoting that the purchaser understands the safety issues relating to this machine and has received and will read a copy of this manual.

If at any time, you have a service problem with your Tiger mower, Contact your local dealer for service and parts needed.

MANUFACTURED BY:
Tiger Corporation
3301 N. Louise Ave.
Sioux Falls, SD 57107
1-800-843-6849
1-605-336-7900
www.tiger-mowers.com

DISTRIBUTED BY:
_____
_____
1-_____-_____-_____
1-_____-_____-_____

TABLE OF CONTENTS

1012

This symbol means:

CAUTION – YOUR SAFETY IS AT RISK!

When you see this symbol, read and
follow the associated instructions carefully
or personal injury or damage may result.

SAFETY SECTION

SAFETY

General Safety Instructions and Practices

A safe and careful operator is the best operator. Safety is of primary importance to the manufacturer and should be to the owner / operator. Most accidents can be avoided by being aware of your equipment, your surroundings, and observing certain precautions. The first section of this manual includes a list of Safety Messages that, if followed, will help protect the operator and bystanders from injury or death. Read and understand these Safety Messages before assembling, operating or servicing this mower. This equipment should only be operated by those persons who have read the Manual, who are responsible and trained, and who know how to do so safely and responsibly.

The Safety Alert Symbol combined with a Signal Word, as seen below, is used throughout this manual and on decals which are attached to the equipment. The Safety Alert Symbol means: ñ**ATTENTION! BECOME ALERT! YOUR SAFETY IS INVOLVED!**ò The symbol and signal word are intended to warn the owner / operator of impending hazards and the degree of possible injury when operating this equipment.

Practice all usual and customary safe working precautions and above all -- remember safety is up to YOU! Only YOU can prevent serious injury or death from unsafe practices.

Indicates an imminently hazardous situation that, if not avoided, WILL result in DEATH OR VERY SERIOUS INJURY.

Indicates an imminently hazardous situation that, if not avoided, COULD result in DEATH OR SERIOUS INJURY.

Indicates an imminently hazardous situation that, if not avoided, MAY result in MINOR INJURY.

IMPORTANT! Identifies special instructions or procedures that, if not strictly observed, could result in damage to, or destruction of the machine, attachments or the enviroment.

NOTE: *Identifies points of particular interest for more efficient or convienient operation or repair.* (SG-1)

READ, UNDERSTAND, and FOLLOW the following Safety Messages. Serious injury or death may occur unless care is taken to follow the warnings and instructions stated in the Safety Messages. Always use good common sense to avoid hazards. (SG-2)

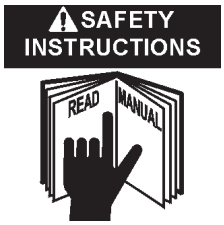

SAFETY

PELIGRO!

Si no lee Ingles, pida ayuda a alguien que si lo lea para que le traduzca las medidas de seguridad. (SG-3)

¡ LEA EL INSTRUCTIVO!

DANGER!

Never operate the Tractor or Implement until you have read and completely understand this Manual, the Tractor Operatorôs Manual, and each of the Safety Messages found in the Manual or on the Tractor and Implement. Learn how to stop the tractor engine suddenly in an emergency. Never allow inexperienced or untrained personnel to operate the Tractor and Implement without supervision. Make sure the operator has fully read and understands the manuals prior to operation. (SG-4)

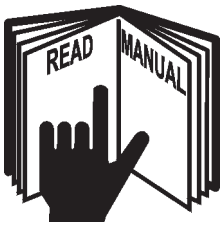

WARNING!

Always maintain the safety decals in good readable condition. <u>If the decals are missing, damaged, or unreadable, obtain and install replacement decals immediately.</u> (SG-5)

WARNING!

Make certain that the ñSlow Moving Vehicleò (SMV) sign is installed in such a way as to be clearly visible and legible. When transporting the Equipment use the Tractor flashing warning lights and follow all local traffic regulations. (SG-6)

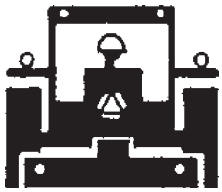

WARNING!

Operate this Equipment only with a Tractor equipped with an approved roll-over-protective system (ROPS). Always wear seat belts. Serious injury or even death could result from falling off the tractor--particularly during a turnover when the operator could be pinned under the ROPS. (SG-7)

WARNING!

Do not modify or alter this Implement. Do not permit anyone to modify or alter this Implement, any of its components or any Implement function. (SG-8)

DANGER!

BEFORE leaving the tractor seat, always engage the brake and/or set the tractor transmission in parking gear, disengage the PTO, stop the engine, remove the key, and wait for all moving parts to stop. Place the tractor shift lever into a low range or parking gear to prevent the tractor from rolling. Never dismount a Tractor that is moving or while the engine is running. Operate the Tractor controls from the tractor seat only. (SG-9)

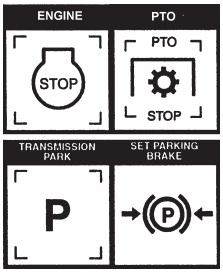

SAFETY

DANGER! Never allow children or other persons to ride on the Tractor or Implement. Falling off can result in serious injury or death. (SG-10)

DANGER! Never allow children to operate or ride on the Tractor or Implement. (SG-11)

WARNING! Do not mount the tractor while the tractor is moving. Mount the tractor only when the tractor and all moving parts are completely stopped. (SG-12)

DANGER! Start tractor only when properly seated in the tractor seat. Starting a tractor in gear can result in injury or death. Read the tractor operators manual for proper starting instructions. (SG-13)

DANGER! Never work under the Implement, the framework, or any lifted component unless the Implement is securely supported or blocked up to prevent sudden or inadvertent falling which could cause serious injury or even death. (SG-14)

DANGER! Do not operate this Equipment with hydraulic oil leaking. Oil is expensive and its presence could present a hazard. Do not check for leaks with your hand! Use a piece of heavy paper or cardboard. High-pressure oil streams from breaks in the line could penetrate the skin and cause tissue damage including gangrene. If oil does penetrate the skin, have the injury treated immediately by a physician knowledgeable and skilled in this procedure. (SG-15)

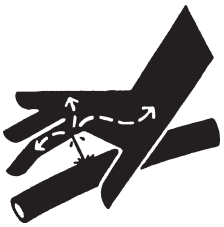

SAFETY

WARNING! The operator and all support personnel should wear hard hats, safety shoes, safety glasses, and proper hearing protection at all times for protection from injury including injury from items thrown by the equipment. (SG-16)

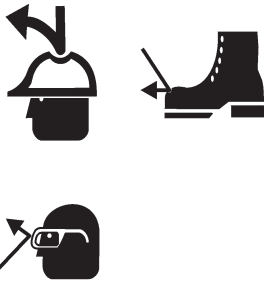

CAUTION! **PROLONGED EXPOSURE TO LOUD NOISE MAY CAUSE PERMANENT HEARING LOSS!** Tractors with or without an Implement attached can often be noisy enough to cause permanent hearing loss. We recommend that you always wear hearing protection if the noise in the operatorôs position exceeds 80db. Noise over 85db over an extended period of time will cause severe hearing loss. Noise over 90db adjacent to the operator over an extended period of time will cause permanent or total hearing loss. *Note:* Hearing loss from loud noise [from tractors, chain saws, radios, and other such sources close to the ear] is cumulative over a lifetime without hope of natural recovery. (SG-I7)

WARNING! Transport only at safe speeds. Serious accident s and injuries can result from operating this equipment at unsafe speeds. Understand the Tractor and Implement and how it handles before transporting on streets and highways. Make sure the Tractor steering and brakes are in good condition and operate properly

Before transporting the Tractor and Implement, determine the safe transport speeds for you and the equipment. Make sure you abide by the following rules:

1. **Test the tractor at a slow speed and increase the speed slowly. Apply the brakes smoothly to determine the stopping characteristics of the Tractor and Implement. As you increase the speed of the Tractor the stopping distance increases. Determine the maximum safe transport speed for you and this equipment.**

2. Test the equipment at a slow speed in turns. Increase the speed through the turn only after you determine that it is safe to operate at a higher speed. Use extreme care and reduce your speed when turning sharply to prevent the tractor and implement from turning over. Determine the maximum safe turning speed for you and this equipment before operating on roads or uneven ground.

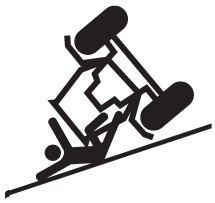

3. Only transport the Tractor and Implement at the speeds that you have determined are safe and which allow you to properly control the equipment.

Be aware of the operating conditions. Do not operate the T ractor with weak or faulty brakes. When operating down a hill or on wet or rain slick roads, the braking distance increases: use extreme care and reduce your speed. When operating in traffic always use the Tractorôs flashing warning lights and reduce your speed. Be aware of traffic around you and watch out for the other guy. (SG-19)

SAFETY

WARNING! Never attempt to lubricate, adjust, or remove material from the Implement while it is in motion or while tractor engine is running. Make sure the tractor engine is **OFF** before working on the Implement. (SG-20)

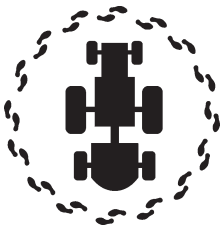

WARNING! Periodically inspect all moving parts for wear and replace when necessary with authorized service parts. Look for loose fasteners, worn or broken parts, and leaky or loose fittings. Make sure all pins are properly secured. Serious injury may occur from not maintaining this machine in good working order. (SG-21)

WARNING! Always read carefully and comply fully with the manufacturers instructions when handling oil, solvents, cleansers, and any other chemical agent. (SG-22)

DANGER! Never run the tractor engine in a closed building or without adequate ventilation. The exhaust fumes can be hazardous to your health. (SG-23)

DANGER! KEEP AWAY FROM ROTATING ELEMENTS to prevent entanglement and possible serious injury or death. (SG-24)

DANGER! Never allow children to play on or around Tractor or Implement. Children can slip or fall off the Equipment and be injured or killed. Children can cause the Implement to shift or fall crushing themselves or others. (SG-25)

SAFETY

DANGER!

NEVER use drugs or alcohol immediately before or while operating the Tractor and Implement. Drugs and alcohol will affect an operator's alertness and coordination and therefore affect the operator's ability to operate the equipment safely. Before operating the Tractor or Implement, an operator on prescription or over-the-counter medication must consult a medical professional regarding any side effects of the medication that would hinder their ability to operate the Equipment safely. **NEVER** knowingly allow anyone to operate this equipment when their alertness or coordination is impaired. Serious injury or death to the operator or others could result if the operator is under the influence of drugs or alcohol. (SG-27)

DANGER!

Operate the Tractor and/or Implement controls only while properly seated in the Tractor seat with the seat belt securely fastened around you. Inadvertent movement of the Tractor or Implement may cause serious injury or death. (SG-29)

WARNING!

Mow only in conditions where you have clear visibility in daylight or with adequate artificial lighting. Never mow in darkness or foggy conditions where you cannot clearly see at least 100 yards in front and to the sides of the tractor and mower. Make sure that you can clearly see and identify passersby, steep slopes, ditches, drop-offs, overhead obstructions, power lines, debris and foreign objects. If you are unable to clearly see this type of items discontinue mowing. (SGM-1)

DANGER!

There are obvious and hidden potential hazards in the operation of this Mower. REMEMBER! This machine is often operated in heavy brush and in heavy weeds. The Blades of this Mower can throw objects if shields are not properly installed and maintained. Serious injury or even death may occur unless care is taken to insure the safety of the operator, bystanders, or passersby in the area. Do not operate this machine with anyone in the immediate area. Stop mowing if anyone is within 100 yards of mower. (SGM-2)

DANGER!

All Safety Shields, Guards and Safety devices including (but not limited to) - the Deflectors, Chain Guards, Steel Guards, Gearbox Shields, PTO integral shields , and Retractable Door Shields should be used and maintained in good working condition. All safety devices should be inspected carefully at least daily for missing or broken components. Missing, broken, or worn items must be replaced at once to reduce the possibility of injury or death from thrown objects, entanglement, or blade contact. (SGM-3)

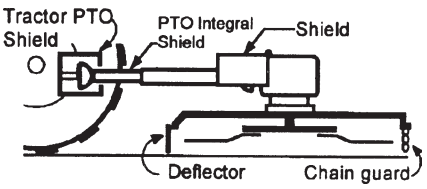

SAFETY

DANGER!

The rotating parts of this machine have been designed and tested for rugged use. However, the blades could fail upon impact with heavy, solid objects such as metal guard rails and concrete structures. Such impact could cause the broken objects to be thrown outward at very high velocities. To reduce the possibility of property damage, serious injury, or even death, never allow the cutting blades to contact such obstacles. (SGM-4)

WARNING!

Extreme care should be taken when operating near loose objects such as gravel, rocks, wire, and other debris. Inspect the area before mowing. Foreign objects should be removed from the site to prevent machine damage and/or bodily injury or even death. Any objects that cannot be removed must be clearly marked and carefully avoided by the operator. Stop mowing immediately if blades strike a foreign object. Repair all damage and make certain rotor or blade carrier is balanced before resuming mowing.(SGM-5)

WARNING!

Many varied objects, such as wire, cable, rope, or chains, can become entangled in the operating parts of the mower head. These items could then swing outside the housing at greater velocities than the blades. Such a situation is extremely hazardous and could result in serious injury or even death. Inspect the cutting area for such objects before mowing. Remove any like object from the site. Never allow the cutting blades to contact such items. (SGM-6)

WARNING!

Mow at the speed that you can safely operate and control the tractor and mower. Safe mowing speed depends on terrain condition and grass type, density, and height of cut. Normal ground speed range is from 0 to 5 mph. Use slow mowing speeds when operating on or near steep slopes, ditches, drop-offs, overhead obstructions, power lines, or when debris and foreign objects are to be avoided. (SGM-7)

WARNING!

Avoid mowing in reverse direction when possible. Check to make sure there are no persons behind the mower and use extreme care when mowing in reverse. Mow only at a slow ground speed where you can safely operate and control the tractor and mower. Never mow an area that you have not inspected and removed debris or foreign material. (SGM-8)

WARNING!

Do not put hands or feet under mower decks. Blade Contact can result serious injury or even death. Stay away until all motion has stopped and the decks are securely blocked up. (SGM-9)

DANGER!

Replace bent or broken blade with new blades. NEVER ATTEMPT TO STRAIGHTEN OR WELD ON BLADES SINCE THIS WILL LIKELY CRACK OR OTHERWISE DAMAGE THE BLADE WITH SUBSEQUENT FAILURE AND POSSIBLE SERIOUS INJURY FROM THROWN BLADES. (SGM-10)

SAFETY

WARNING!

Do not mow with two machines in the same area except with Cab tractors with the windows closed. (SGM-11)

DANGER!

Rotary and Flail Mowers are capable under adverse conditions of throwing objects for great distances (100 yards or more) and causing serious injury or death. Follow safety messages carefully.

STOP MOWING IF PASSERSBY ARE WITHIN 100 YARDS UNLESS:

- -Front and Rear Deflectors are installed and in good, working condition;
- -Mower Head is running close to and parallel to the ground without exposed Blades;
- -Passersby are outside the existing thrown-object zone;
- -All areas have been thoroughly inspected and all foreign material such as rocks, cans, glass, and general debris has been removed.

NOTE: Where there are grass and weeds high enough to hide debris that could be struck by the blades, the area should be: inspected and large debris removed, mowed at an intermediate height, inspected closely with any remaining debris being removed, and mowed again at desired final height. (SBM-1)

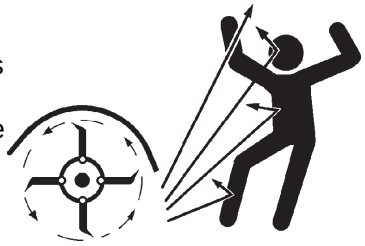

DANGER!

Use extreme caution when raising the Mower head. Stop the Blades from turning when the Mower Head is raised and passersby are within 100 yards. Raising the Mower head exposes the Cutting Blades which creates a potentially serious hazard and can cause serious injury by objects thrown from the Blades or by contact with the Blades. (SBM-2)

DANGER!

Be particularly careful in transport. The Mower has raised the center of gravity for the tractor and has increased the possibility of overturn. Turn curves or go up slopes only at low speed and using a gradual turning angle. Slow down on rough or uneven surfaces. (SBM-3)

WARNING!

Never Leave the mower unattended while the head is in the raised position. The mower could fall causing serious injury to anyone who might inadvertently be under the mower (SBM-4)

WARNING!

The rotating parts of this machine continue to rotate even after the Tractor has been turned off. The operator should remain in his seat for 60 seconds after the brake has been set, the PTO disengaged, the tractor turned off, and all evidence of rotation has ceased. (SBM-5)

ñWait a minute...Save a life!ò

SAFETY

Relieve hydraulic pressure prior to doing any maintenance or repair work on the Implement. Place the Mower Head on the ground or securely supported on blocks or stands, disengage the PTO, and turn off the engine. Push and pull the control Levers or Joystick several times to relieve pressure prior to starting any maintenance or repair work. (SBM-6)

DANGER!

Always keep a careful lookout and use extreme care when working around overhead obstructions. Never allow the Mower head or boom within 10 feet of any power line. When working close to overhead power lines consult your electric company for a safe code of operation.

(SBM-7)

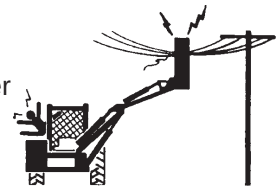

DANGER!

When transporting Boom Mower on a truck or trailer, the height or width may exceed legal limits when the boom is in the transport position. Contact with side or overhead structures or power lines can cause property damage or serious injury or death. If necessary lower boom to reduce height and/or remove mowing head to reduce width to the legal limits. (SBM-8)

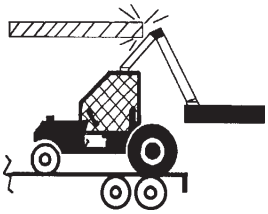

DANGER!

Never operate the Tractor and Mower Unit without an OPS (Operators Protective Structure) or Cab to prevent injury from objects thrown from ground or from overhead trimming. Stop mowing if workers or passersby are with in 100 yards. (SBM-9)

DANGER!

Left Rear Wheel must have a minimum of 1500 pound contact with the surface to prevent lateral instability and possible tip-over which could result in serious bodily injury or even death. Widen the wheel tread and add weights if needed. Refer to the mounting instructions or call Customer Service if you need assistance with Counterweight Procedure. (SBM-11)

DANGER!

Always disconnect the wire leads from the mower pump solenoid before performing service on the Tractor or Mower. Use caution when working on the Tractor or Mower. Tractor engine must be stopped before working on Mower or Tractor. The Mower Blades could inadvertently be turned on without warning and cause immediate dismemberment, injury or death. (SBM-12a)

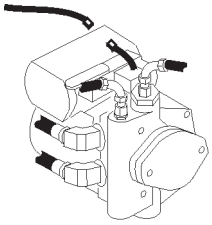

DANGER!

The flail cutter shaft is designed for standard rotation (same rotation as the tractor wheels during forward travel). **Never operate the cutter shaft in the reverse rotation.** Operating this mower in reverse rotation may cause objects to be thrown out the front of the mower head.

SAFETY

WARNING!

Engine Exhaust, some of its constituents, and certain components contain or emit chemicals known to the state of California to cause cancer and birth or other reproductive harm.

WARNING!

Battery posts, terminals and related accessories contain lead and lead compounds, chemicals known to the state of California to cause cancer and birth or other reproductive harm. **Wash hands after handling!**

Tiger mowers use balanced and matched system components for blade carriers, blades, cutter-shafts, knives, knife hangers, rollers, drive-train components and bearings. These parts are made and tested to Tiger specifications. Non-genuine ñwill fitò parts do not consistently meet these specifications. The use of ñwill fitò parts may reduce mower performance, void mower warranties and present a safety hazard. Use genuine Tiger mower parts for economy and safety.

SEE YOUR Tiger DEALER

In addition to the design and configuration of this Implement, including Safety Signs and Safety Equipment, hazard control and accident prevention are dependent upon the awareness, concern, prudence, and proper training of personnel involved in the operation, transport, maintenance, and storage of the machine. Refer also to Safety Messages and operation instruction in each of the appropriate sections of the T ractor and Equipment Manuals. Pay close attention to the Safety Signs affixed to the T ractor and Equipment. (SG-18)

PART NO.
LOCATION

002369
HYDRAULICTANK

00725746
INSIDE OF CAB

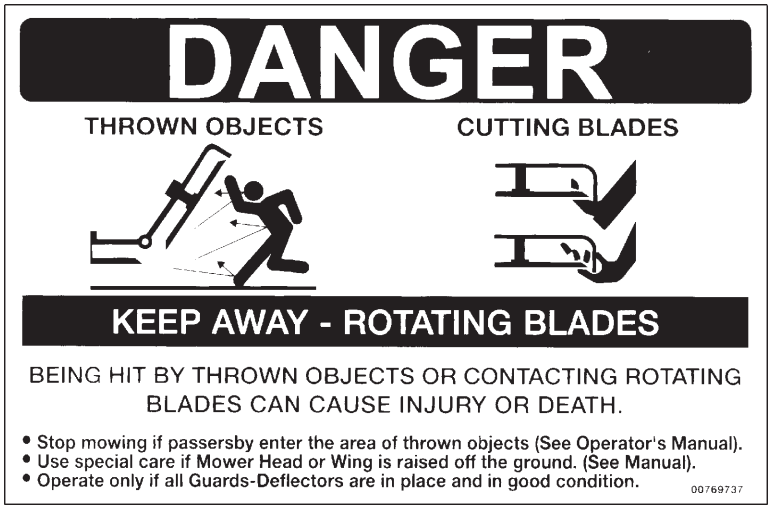

00769737
MOWER DECK

PART NO.
LOCATION

00758194
MOWER DECK

02962764
MAIN BOOM, SECONDARY BOOM, MAIN FRAME

02962765
MAIN FRAME

02965262
HYDRAULICTANK

PART NO.
LOCATION

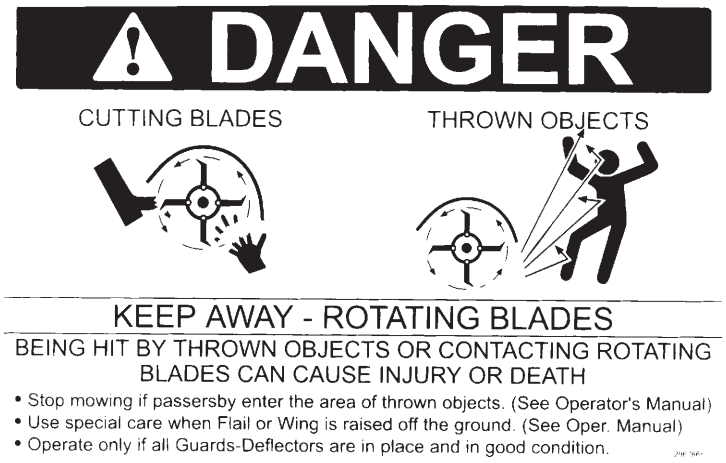

02967668
MOWER DECK

02971123
HYDRAULICTANK

03200285
OUTSIDE OF CAB

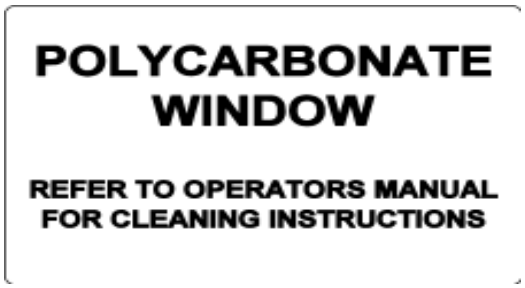

22645
INSIDE OF CAB

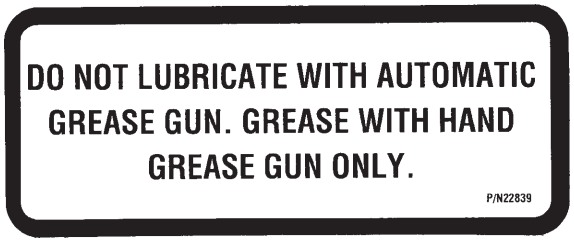

22839
MOWER DECK

PART NO.
LOCATION

22840
INSIDE OF CAB

24028
MOWER DECK

25387
INSIDE OF CAB

10òx 5.5ò 31522
MOWER DECK, MAIN BOOM
18.25òx 10ò 31523
HYDRAULIC TANK

PART NO.
LOCATION

32428
MAIN BOOM

32449
HYDRAULICTANK

PART NO.
LOCATION

⚠ DANGER

1. **EACH REAR WHEEL MUST HAVE A MINIMUM OF 1500 POUNDS** CONTACT WITH THE SURFACE TO PREVENT LATERAL INSTABILITY AND POSSIBLE TIP-OVER WITH **BODILY INJURY.** WIDEN WHEEL TREAD AND ADD WEIGHTS IF NEEDED. SEE MANUAL OR CALL TIGER CUSTOMER SERVICE FOR COUNTERWEIGHT PROCEDURE.

2. **TRANSPORT CAREFULLY!** SLOW DOWN EVEN MORE ON SLOPES AND WHEN TURNING; NEVER TURN **UP A SLOPE** SHARPLY OR AT HIGH SPEED; AND USE EXTRA CARE IN ROUGH OR BUMPY AREAS TO PREVENT OVERTURN AND POSSIBLE CRUSHING **INJURY OR DEATH.** IF YOUR VIEW TO THE REAR IS BLOCKED, IT IS **YOUR RESPONSIBILITY** TO **INSTALL MIRRORS** THAT PROVIDE A REAR VIEW TO PREVENT ACCIDENTS FROM BLIND SPOTS.

3. **REAR-MOUNTED BOOM MOWERS** MOVE CENTER OF GRAVITY TO THE REAR AND REMOVE WEIGHT FROM FRONT WHEELS. **ADD FRONT BALLAST** UNTIL AT LEAST **20% OF TRACTOR'S WEIGHT IS ON FRONT WHEELS** TO PREVENT REARING UP, LOSS OF STEERING CONTROL, AND POSSIBLE INJURY.

4. **NEVER OPERATE UNIT WITHOUT AN OPS (OPERATOR PROTECTIVE STRUCTURE) OR CAB** TO PREVENT INJURY FROM OBJECTS **THROWN FROM GROUND** AND OVERHEAD TRIMMING. STOP CUTTING IF ANYONE IS WITHIN **100 YARDS.**

5. **KEEP THE BOOM AND CUTTERHEAD AT LEAST 10 FEET FROM ELECTRIC LINES AND PIPE LINES** TO PREVENT ACCIDENTAL CONTACT AND POSSIBLE SERIOUS INJURY OR EVEN DEATH.

6. **WHEN TRANSPORTING BOOM MOWERS ON A TRUCK OR TRAILER, THE HEIGHT OR WIDTH MAY EXCEED LEGAL LIMITS. CONTACT WITH SIDE OR OVERHEAD STRUCTURES OR POWER LINES CAN CAUSE SERIOUS INJURY OR DEATH.**
LOWER BOOM TO REDUCE HEIGHT AND/OR REMOVE MOWING HEAD TO REDUCE WIDTH TO THE LEGAL LIMITS, IF NEEDED.

32707

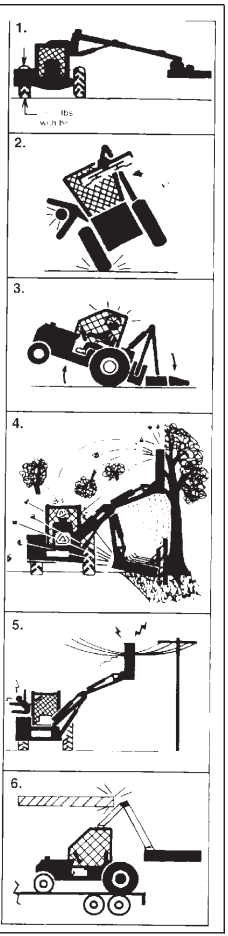

32707
HYDRAULICTANK

ATTENTION

SERVICE HYDRAULIC SYSTEM WITH UNIVERSAL TRACTOR HYDRAULIC OIL.

32708

32708
HYDRAULICTANK

⚠ CAUTION

For your safety and to guarantee optimum product reliability, always use genuine TIGER replacement parts. The use of inferior "will-fit" parts will void warranty of your TIGER implement and may cause premature or catastrophic failure which can result in serious injury or death. If you have any questions concerning the repair parts you are using, contact TIGER, 3301 N. LOUISE AVE., SIOUX FALLS, SD 57107

32709

32709
INSIDE OF CAB

PART NO.
LOCATION

33224
MOWER DECK

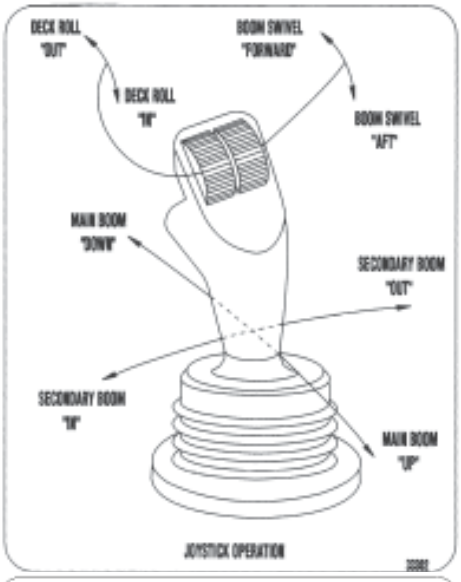

33302
INSIDE OF CAB

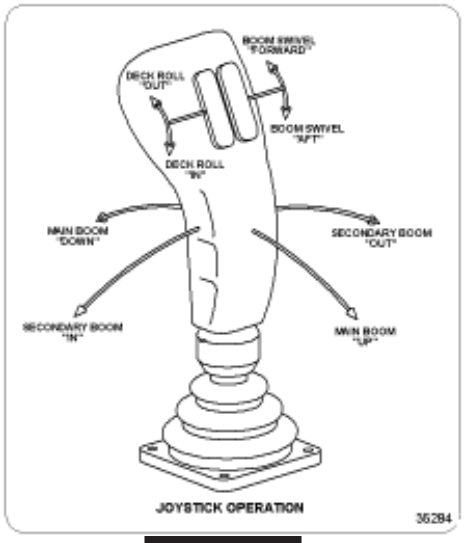

35284
INSIDE OF CAB

Tiger™

33438
MAIN BOOM

	PART NO. LOCATION
	33512 INSIDE OF CAB
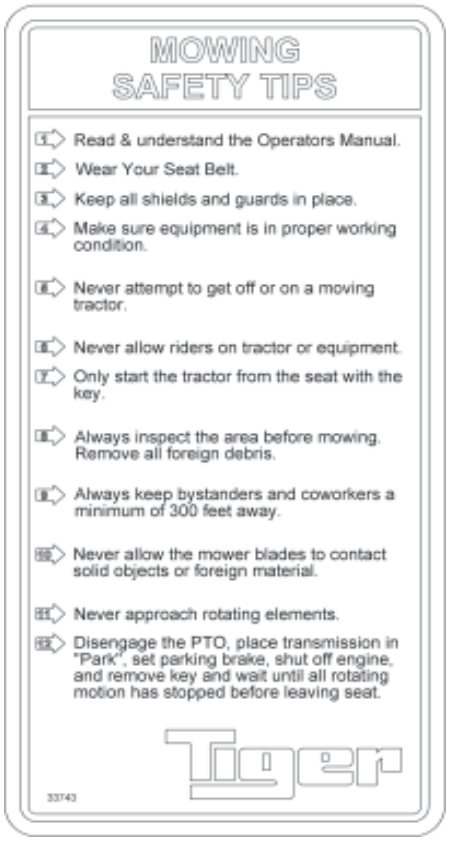	33743 INSIDE OF CAB
	42350 MOWER DECK

PART NO.
LOCATION

RED 42399
REFLECTIVE TAPE
MOWER DECK

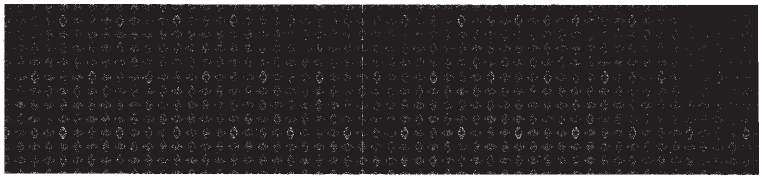

AMBER 42400
REFLECTIVE TAPE
MOWER DECK

6T3217
MOWER DECK

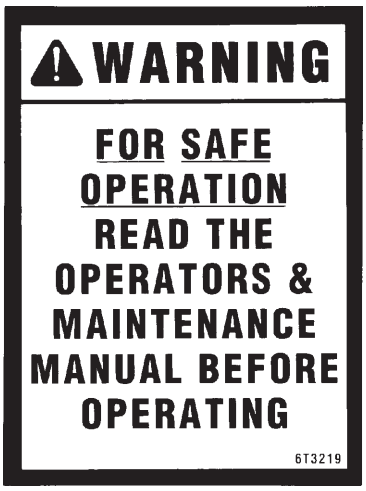

6T3219
INSIDE OF CAB

6T3220
FRONT PUMP MOUNT

PART NO.
LOCATION

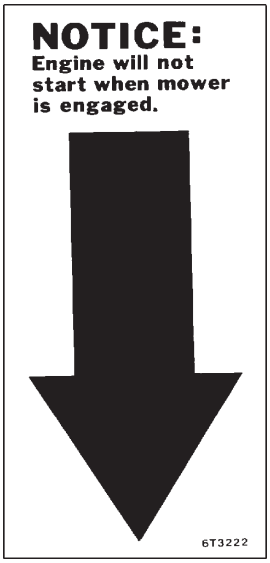

6T3222
INSIDE OF CAB

6T3224
MOWER DECK

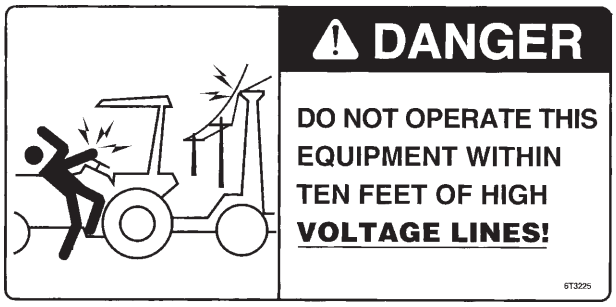

6T3225
INSIDE OF CAB

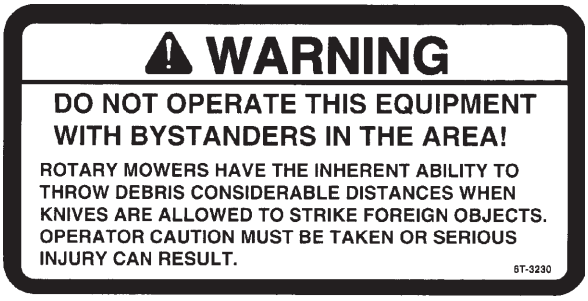

6T3230
INSIDE OF CAB

	PART NO. LOCATION
	6T3233 HYDRAULICTANK
	6T3234 INSIDE OF CAB
	6T3236 MOWER DECK
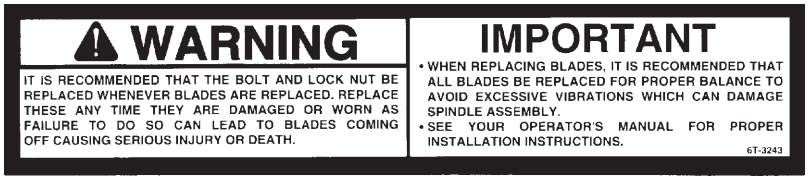	6T3243 INSIDE OF CAB
	6T3249A MOWER DECK

PART NO.
LOCATION

6T3261
MOWER DECK

TB1011
MOWER DECK

Tiger Corporation
800-843-6849
www.tiger-mowers.com

Description	Application	General Specification	Recommended Lubricant
Tractor Hydraulics	Reservoir	JD-20C	Mobilfluid® 424
Mower Hydraulics Cold Temperatures 0°F Start-up Normal Temperatures 10°F Start-up Normal Temperatures 15°F Start-up High Operating Temperatures Above 90°F Ambient	Reservoir	 ISO 46 Anti-Wear/ Low Temp JD-20C ISO 46 Anti-Wear ISO 100 Anti-Wear	 Mobil DTE® 15M Mobilfluid® 424 Mobil DTE® 25 Mobil DTE® 18M
Flail Rear Gearbox	Reservoir	PAO Synthetic Extreme Pressure Gear Lube	Mobilube SHC® 75W-90, Mobil 1 Synthetic Gear Lubricant
Cutter Shaft and Ground Roller Shaft (Flail)	Grease Gun	Lithium Complex, NLGI 2 ISO 320	Mobilgrease® CM-S
Drive Shaft Coupler (Rotary and Flail)	Grease Gun	Lithium Complex, NLGI 2 ISO 320	Mobilgrease® CM-S
Boom Swivel, Boom Cylinder Pivots (Rotary and Flail Boom Type)	Grease Gun	Lithium Complex, NLGI 2 ISO 320	Mobilgrease® CM-S
Deck Boom Pivot & Deck Stop Adjustment (Rotary and Flail)	Grease Gun	Lithium Complex, NLGI 2 ISO 320	Mobilgrease® CM-S
Deck Spindle (Rotary)	Grease Gun	Tiger Spindle Lubricant	Mobilith SHC 220

For Mobil product information, availability, or technical information, call 1-800-662-4525.

Tiger PN 34852

34852
HYDRAULIC TANK

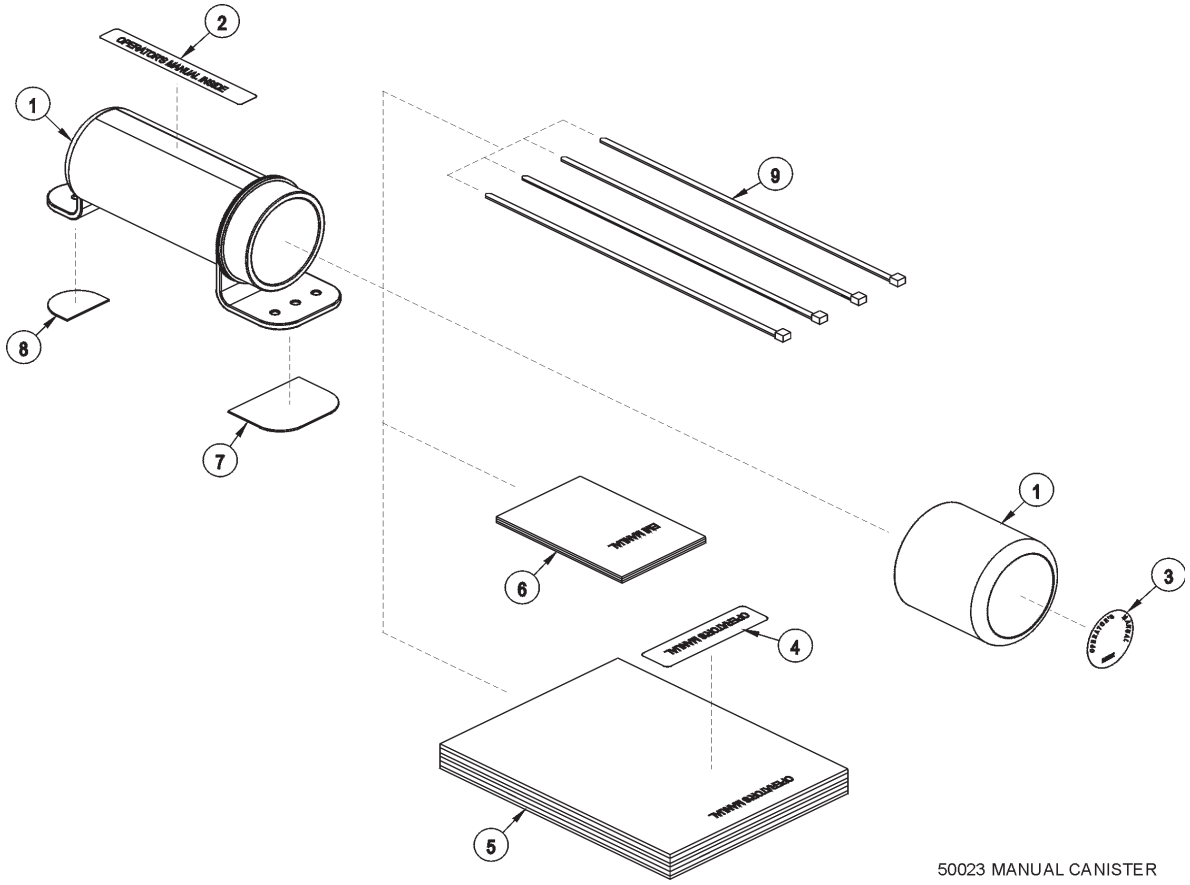

50023 MANUAL CANISTER

ITEM	PART NO.	QTY.	DESCRIPTION
	50023	**AVAIL**	**MANUAL CANISTER COMPLETE**
1	00776031	1	ROUND MANUAL CANISTER
	33997	1	DECAL, SHEET, MANUAL CANISTER
2		*	DECAL
3		*	DECAL
4		*	DECAL
5	*	AVAIL	SPECIFIC PRODUCT MANUAL
6	33753	1	E M I SAFETY MANUAL
7	34296	1	FRONT ADHESIVE PAD
8	34297	1	REAR ADHESIVE PAD
9	6T1823	4	ZIP TIE 14ò LONG

NOTE:

The manual canister can be bolted, zip tied or adhered to a variety of surfaces. Locate a protected area within the view of the operator. Then select an installation method and attach the canister. **CAUTION - AVOID DRILLING HOLES INTO UNKNOWN AREAS,** wires and other parts may be located behind these areas. When adhering the canister to a surface, thoroughly clean that surface before installing the canister.

FEDERAL LAWS AND REGULATIONS

This section is intended to explain in broad terms the concept and effect of federal laws and regulations concerning employer and employee equipment operators. This section is not intended as a legal interpretation of the law and should not be considered as such.

Employer-Employee Operator Regulations
U.S. Public Law 91-596 (The Williams-Steiger Occupational and Health Act of 1970) OSHA

This Act Seeks:
ñ..to assure so far as possible every working man and woman in the nation safe and healthful working conditions and to preserve our human resources...ò

DUTIES

Sec. 5 (a) Each employer-
(1) shall furnish to each of his employees employment and a place of employment which are free from recognized hazards that are causing or are likely to cause death or serious physical harm to his employees;
(2) shall comply with occupational safety and health standards promulgated under this Act.
(b) Each employee shall comply with occupational safety and health standards and all rules, regulations and orders issued pursuant to this Act which are applicable to his own actions and conduct.

OSHA Regulations
OSHA regulations state in part: ñAt the time of initial assignment and at least annually thereafter, the employer shall instruct every employee in the safe operation and servicing of all equipment with which the employee is, or will be involved.ò

Employer Responsibilities:
To ensure employee safety during Tractor and Implement operation, it is the employerôs responsibility to:

1. Train the employee in the proper and safe operation of the Tractor and Implement.
2. Require that the employee read and fully understand the Tractor and Implement Operatorôs manual.
3. Permit only qualified and properly trained employees to operate the Tractor and Implement.
4. Maintain the Tractor and Implement in a safe operational condition and maintain all shields and guards on the equipment.
5. Ensure the Tractor is equipped with a functional ROPS and seat belt and require that the employee operator securely fasten the safety belt and operate with the ROPS in the raised position at all times.
6. Forbid the employee operator to carry additional riders on the Tractor or Implement.
7. Provide the required tools to maintain the Tractor and Implement in a good safe working condition and provide the necessary support devices to secure the equipment safely while performing repairs and service.

Child Labor Under 16 Years of Age
Some regulations specify that no one under the age of 16 may operate power machinery. It is your responsibility to know what these regulations are in your own area or situation. (Refer to U.S. Dept. of Labor, Employment Standard Administration, Wage & Home Division, Child Labor Bulletin #102.)

ASSEMBLY SECTION

ASSEMBLY

Before attempting to mount your Tiger mower, it is important to read an understand all of the Safety Messages in the Safety Section of this manual.

Check complete shipment list against the packing list to make sure there are no shortages. Make certain the tractor model is the appropriate one for the mower received!

WARNING Always use a floor jack, hoist or fork lift to lift and raise heavy parts.

Read and understand the entire Assembly Section instructions before attempting to mount your Tiger mower. Refer to the Parts Section of this manual for detailed illustrations to locate all parts. *(ASM-C-0001)*

TRACTOR PREPARATION

A. Remove right and left hand steps.

B. Disconnect battery cables from both batteries.

C. Remove engine side panels, or raise hood to access front pulley.

D. Remove plugs from tractor casting where mainframe and pump mount will be attached.

E. Remove any front weights and weight supports.

F. Raise the tractor onto jack-stands and remove the right and left rear wheels.

(ASM-C-0024)

CRANKSHAFT ADAPTER

If necessary remove the four capscrews from the crankshaft pulley. Then install the crankshaft adapter to the pulley with capscrews and lockwashers as shown in the Parts Section.
(ASM-NH-0050)

FRONT PUMP MOUNTING

Install the pump mounting bracket on the front of the tractor with capscrews and washers as shown in the Parts Section illustration. DO NOT tighten fasteners at this time.

Thread the pump driveshaft into the crankshaft adapter. The end with the splines should match up with the coupler.

Slide the splined driveshaft coupler onto the pump driveshaft. Install the pump onto the mounting bracket. NOTE: The shaft is offset to one direction, the pump should be installed with the offset side on top. Install hardware for securing pump to the pump mount, DO NOT tighten.

Align pump so that splined coupling can be moved back and forth by hand. Tighten pump mounting bolts in succession rechecking for spline coupling movement. Remove the pump mounting bracket bolts one at a time and apply a thread locking agent. Tighten these bolts in succession, again checking for free movement in the driveshaft. After all bolts are torqued, the end play on the driveshaft should be 1/16ò to 1/8ò and coupler should move freely with hand pressure. If end play is less than 1/16ò grind the end of the shaft to achieve the proper endplay. If there is more than 1/4" of end play, return the shaft with specifications for a longer shaft.

CAUTION: DO NOT START THE TRACTOR UNTIL ALL HOSES ARE ATTACHED, TANK IS FILLED WITH PROPER OIL AND BALL VALVES ARE OPEN! STARTING AT THIS TIME WILL CAUSE SERIOUS DAMAGE TO THE PUMP. *(ASM-NH-0024)*

ADJUSTING REAR WHEELS

Raise rear of tra ctor onto jack-stands. **Follow the instructions in the tractor owners manual for adjusting tires and rims** to 72ò center for side mounted mowers and 79.8ò for boom mowers. NOTE: This may require switching the wheels to opposite sides of tractor. Also take note of any width restrictions when transporting by trailer. (For ease of installation, it is best to leave the rear wheels removed during installation of the mower.) *(ASM-NH-0051)*

MAINFRAME INSTALLATION

With an overhead hoist and / or jack-stands, raise one side of the frame up to the correctly matching mounting holes. Install capscrews and all other hardware as shown in mainframe Parts Section to secure the sides of the mainframe to the tractor casting, DO NOT tighten at this time. Remove the capscrews one at a time and apply a thread locking agent. Reinsert the capscrews and tighten / torque to values noted in the torque chart located in the Maintenance Section of this manual. *(ASM-C-0003)*

POLYCARBONATE SAFETY WINDOW

NOTE: Installing a boom mower requires that all of the right side windows be replaced, or protected with a polycarbonate window. This should be done before mounting the main frame.

1. Disconnect gas shock at door. Remove the right side cab door/window glass from tractor cab by removing hinge pins. Also, remove rear right side window.

2. Remove the existing hardware and discard factory glass door and window.

3. Place small bead of adhesive seal in the bottom of the trim lock bubble seal.

4. Install trim lock bubble seal on polycarbonate starting at the center bottom horizontal portion.

5. Install existing hardware removed from glass door and window on the polycarbonate.

6. Install the polycarbonate assembly in the cab with existing and supplied hardware.

7. Press polycarbonate into place at upper front corner.

8. Drill a Ï 3/16ò pilot hole through polycarbonate and corner gusset of door jam.

9. Locate hole 1-1/4ò from edge of the lower rounded feature of the corner gusset and center it from each end. Then drill out hole in polycarbonate with a Ï 15/32ò bit that is **only** used for polycarbonate.

10. Drill out hole in gusset with Ï 3/8ò bit for steel.

11. Install the polycarbonate door into place where factory door wsa removed (upper right rear first). Refer to the Parts Section for the details.

12. Install grommet into hole in polycarbonate. Install supplied 1/4ò nut into corner gusset.

13. Secure upper right corner with supplied washer and capscrew. Refer to the Parts Section for details. *(ASM-NH-0052)*

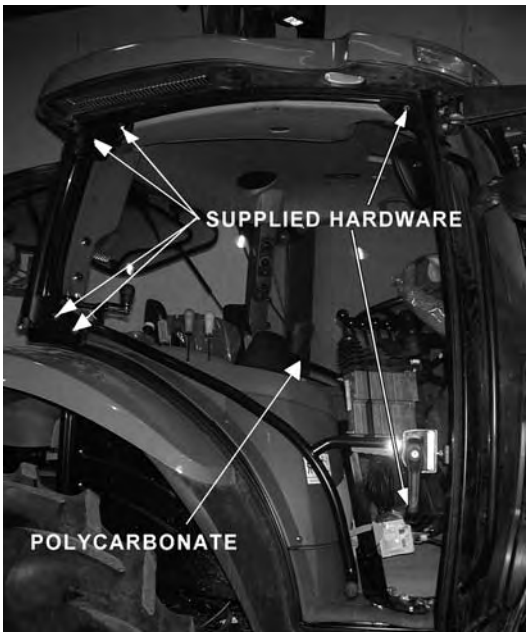

MIRROR MOUNT

1. Remove the existing mirror bracket and mirror from the cab.
2 Remove the mirror and knob from existing bracket.
3. Install the supplied bracket (using supplied hardware) on the cab as shown below.
4. Install the mirror with the knob on the supplied bracket as shown below. Refer to the Parts section for details.

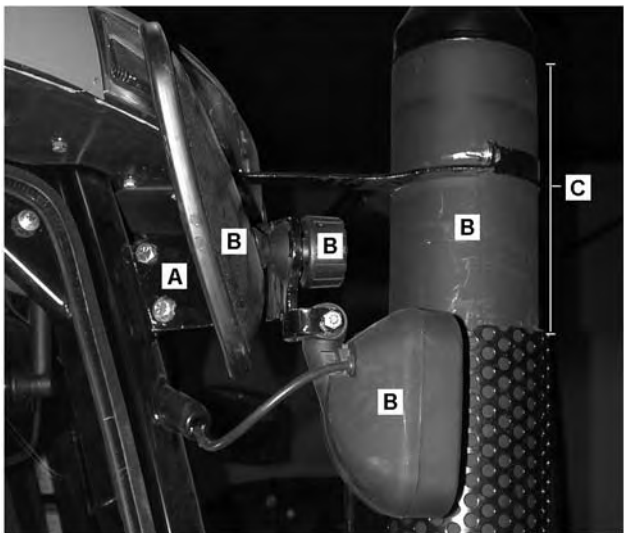

T

A. Mirror/Light Mount Bracket
B. Existing Hardware
C. Distance the muffler screen is cut back to fit the exhaust collar
   - Half distance from the top bolt hole to to the top of the screen.

(ASM-NH-0053)

LIGHT MOUNT

1. Remove light and light bracket from hand rail.
2. Tape light back against the hand rail next to the cab.
3. At the base of the hand rail, cut through the rail 2òfrom the cab.
4. To disconnect the wiring for the light, cut the hand rail through the hole where the wires extend.
5. Disconnect green connector, or wires inside light assembly, and pull wire through the hand rail.
6. Cut the hand rail 2òfrom the frame.
7. Place a small amount of adhesive on outer edge of the lower hand rail stub. Slide rubber cap on the stub.
8. Take second rubber cap and cut a small ñXòat the end. Feed the light wire through the cap, the hand rail. Re-attach green connector or wires inside light assembly.
9. Place small amount of adhesive on outer edge of upper hand rail stub. Slide rubber cap on the stub.
10. Mount light to mirror bracket. (ASM-NH-0054)

4 CYLINDER EXHAUST MOUNT

NOTE: This should be done after mounting the main frame.

1. Cut the tractor hood as shown in Pic. #1 to accomodate modified exhaust turbo tube.
2. Remove the muffler from existing turbo tube.
3. Remove existing turbo tube from tractor turbo.
4. Install the exhust mounting bracket and supporting brace.
5. Cut the existing tube at turbo end 4-3/8òfrom hole center as shown in Pics. #2 and #3. Discard remaining portion of existing tube.
6. Install the turbo end of existing tube to the tractor turbo.
7. connect the supplied tube to the turbo end of existing tube using the sealing clamp as shown in Pic. #4. Do not tighten the hardware.
8. Install the exhaust clamp to the exhaust mounting bracket with the supplied hardware. Refer to the Parts Section for details.
9. Tighten the turbo existing hardware first and then the rest of the hardware.
10. Cut the muffler sweep off at the top and replace with a raincap, if necessary for shipping, as shown in Pic. #5. Install muffler to the turbo tube with the existing hardware. (ASM-NH-0055)

Picture #1

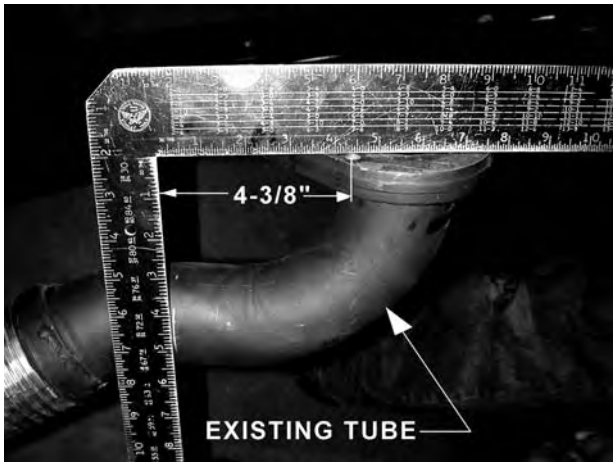

Picture #2

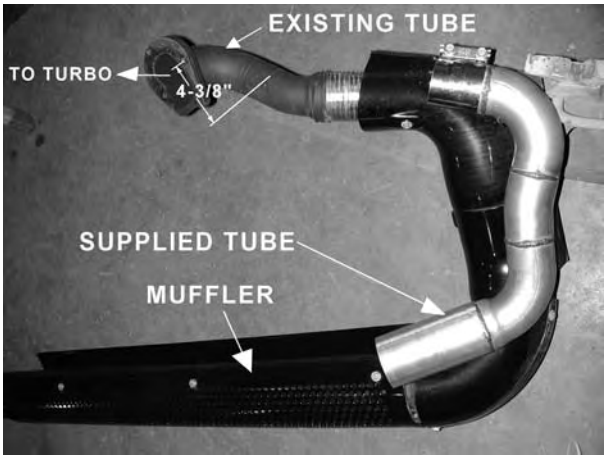

Picture #3

4 CYLINDER EXHAUST MOUNT (continued)

(ASM-NH-0056)

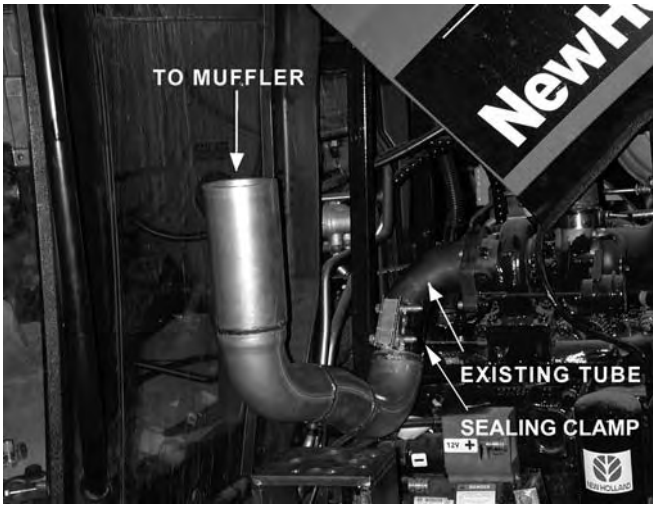

Picture #4

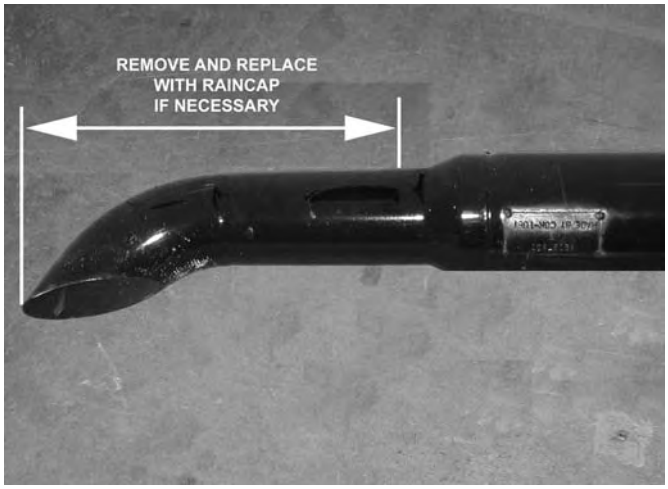

Picture #5

6 CYLINDER EXHAUST MOUNT

NOTE: This should be done after mounting the main frame.

1. Cut the tractor hood as shown in below to accomodate modified exhaust turbo tube.
2. Remove the muffler from existing turbo tube.
3. Remove existing turbo tube from tractor turbo.
4. Install the exhust mounting bracket and supporting brace.
5. Install the modified turbo tube to the tractor turbo with existing hardware. Do not tighten the hardware.
6. Install the exhaust clamp to the exhaust mounting bracket with the supplied hardware. Refer to the Parts Section for details.
7. Tighten the turbo existing hardware.
8. Cut the muffler 8òoff at the top as shown below and weld the sweep back onto the top of the muffler maintaining the same direction. Then install muffler to the turbo tube with the existing hardware. (ASM-NH-0057)

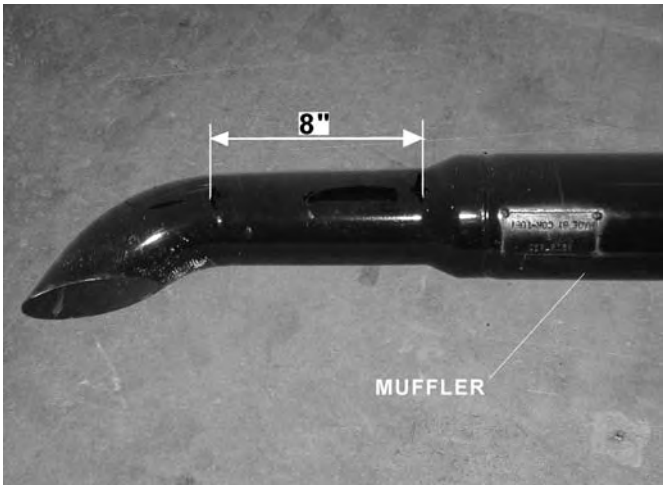

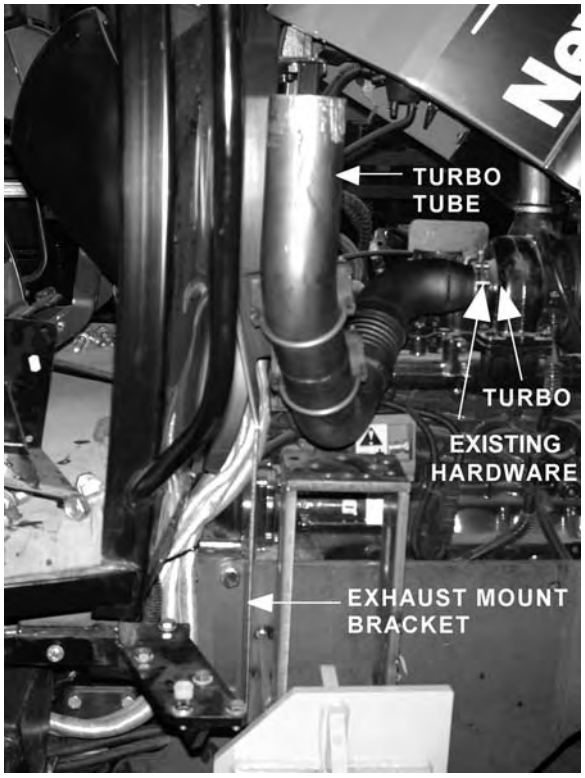

SWITCHBOX WIRING

Refer to the Parts Section for wiring diagrams. Remove top instrument panel (tach, and hour meter) for access to the wires.

Route the red and green switchbox wires from the switchbox to the bottom right corner of the instrument panel near window. Connect the red wire to the white wire. (hot when key is in the ónôposition)

NOTE ONLY FOR ELECTRONIC VALVE: +12 VOLTS ELECTRICAL POWER MUST BE TAKEN FROM A SOURCE LOCATION WHERE IT IS LIVE ONLY WHEN THE IGNITION SWITCH IS IN THE ñONò POSITION. THIS WIRE MUST BE FUSED A THE SOURCE LOCATION.

Route the white wire to the hydraulic solenoid brake valve.

The switchbox is to be secured to the operator's side of the control handles, or corner switchbox mount.

The green wires will connnect to the neutral safety switch wires (white with yellow stripe), under the cowl panel. *(ASM-NH-0061)*

BEFORE WIRING

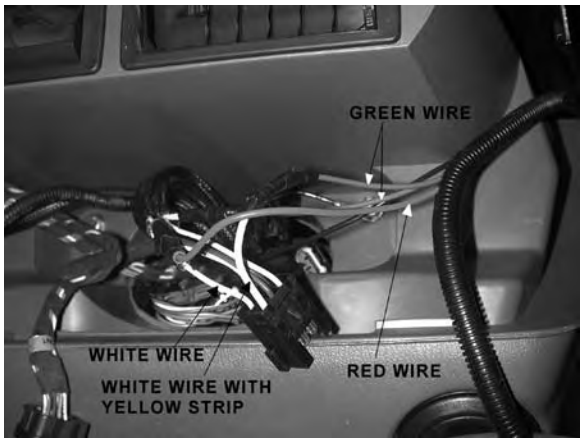

AFTER WIRING

WEATHER-PACK/METRI-PACK ASSEMBLY

These instructions apply to both Weather-Pack and Metri-pack connectors.

NOTE: Use the specific tool for the type of connector you are assembling.

(ASM-C-0009)

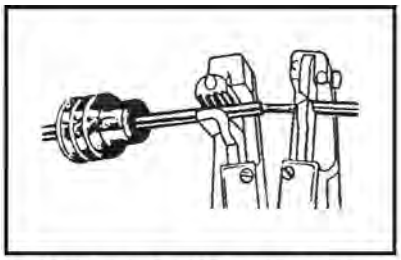

1. Apply seal to cable, before stripping insulation.

2. Align seal with cable insulation.

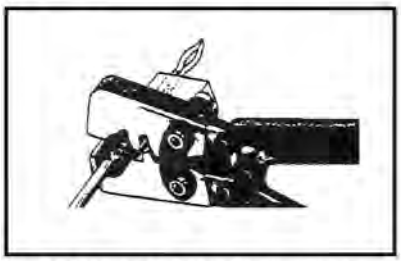

3. Put terminal in crimping tool, then

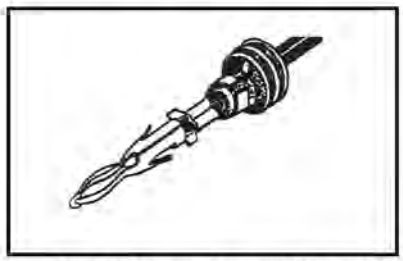

4. Crimp and visually inspect for a good

IDENTIFYING TRACTOR HYDRAULIC SYSTEM

The lift valve uses the Pressure, Return and Load Sense on the tractors rear remotes. Depending on what tractor hydraulic system you have determines how the lift valve is plumbed.

The Closed Center system is shown below. For more information refer to the Parts Section page for a complete diagram of the tractor lift valve hookup. *(ASM-NH-0022)*

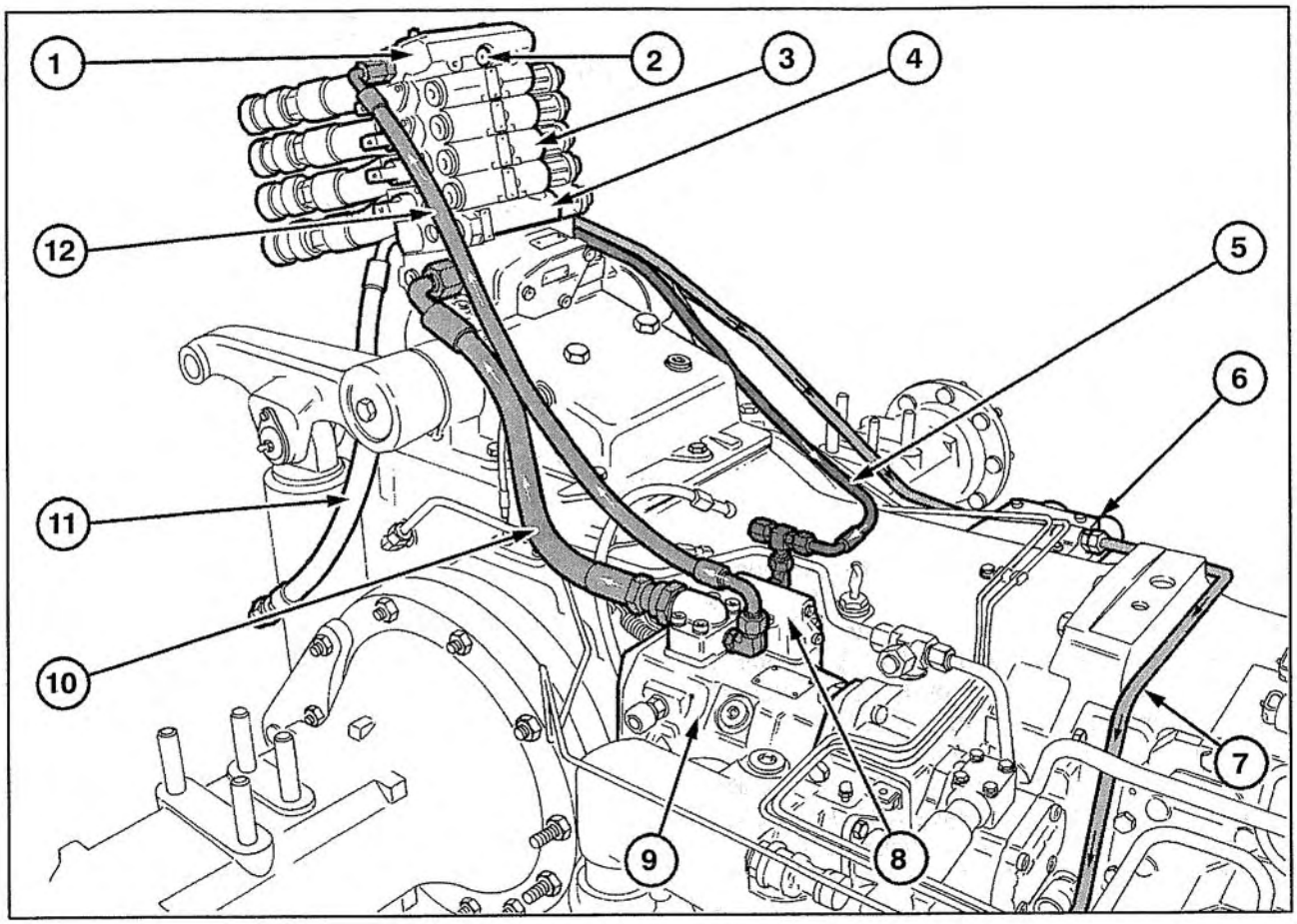

CLOSED CENTER SYSTEM

1. End Plate
2. Load Sensing Port for Mid-Mount Valve
3. Electro-Hydraulic Remote Valves
4. Electronic Draft Control Valve
5. Load Sensing Line
6. Low Pressure Circuit Distribution Manifold
7. Low Pressure Feed
8. Pressure Compensator Valve
9. CCLS Pump
10. High Pressure Feed to Electro-Hydraulic Remote Valves
11. Feed to Hydraulic Lift Cylinder
12. High Pressure Feed to Electro-Hydraulic Valve Pilot Line

For Open Center hydraulic systems, the lift valve will need additional pressure. This pressure is taken from the Power Steering Return line which is located behind the battery box.

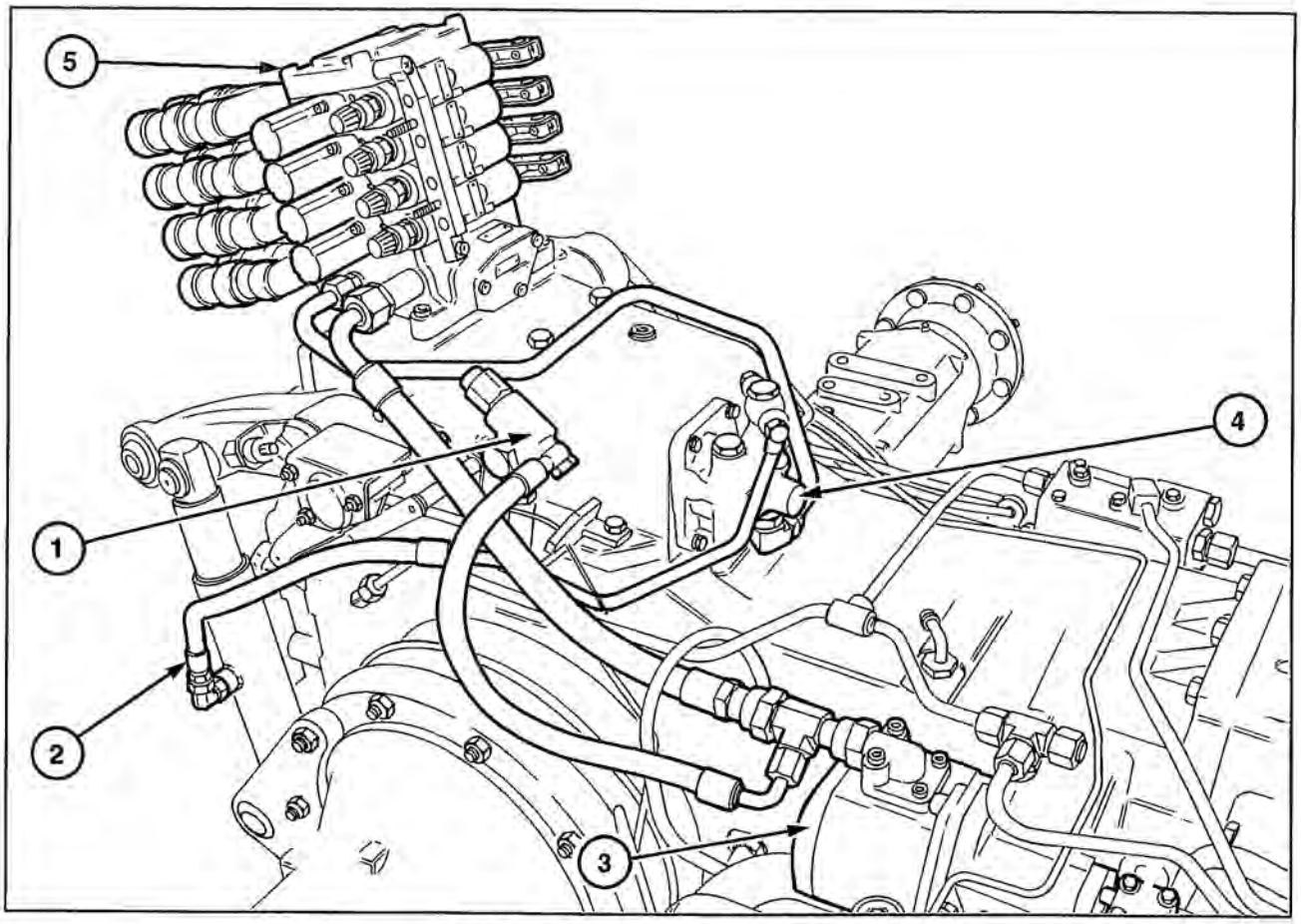

OPEN CENTER SYSTEM

1. Pressure Relief Valve
2. Feed To Lift Cylinder (optional on MXU Value w/ MDC)
3. Fixed Displacement Pump
4. Mechanical Draft Control Valve
5. Remote Control Valves

LOAD SENSE HOSE ROUTING - OPEN CENTER

On a tractor with an Open Center system with Closed Center remotes, the lift valve uses the Pressure, Return and Load Sense on the tractors rear remotes. The ports used are directly under the valve mounting plate as shown below.

The Pressure hose is routed from the tractor remotes to the inlet port of the HP filter on the valve mounting bracket. Then, the outlet port of the HP Filter to the pressure port on the lift valve.

The Return hose runs from the return port of the lift valve to the tractor remotes.

The Load Sense line is routed from the load sense port of the lift valve to the load sense port on the tractor rear remotes.

For more information refer to the Parts Section page for a complete diagram of the tractor valve hookup. *(ASM-NH-0062)*

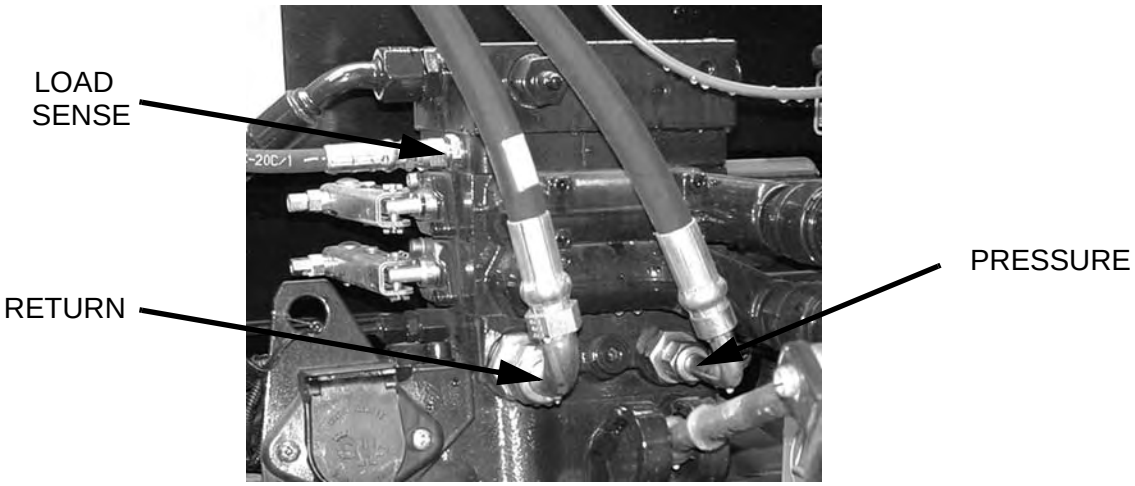

LOAD SENSE HOSE ROUTING - OPEN CENTER

(CONTINUED)

On a tractor with an Open Center system with Open Center ports, the lift valve uses the Pressure, Return and Power Beyond ports on the tractors rear remotes. The ports used are directly under the valve mounting plate as shown below. *(ASM-*

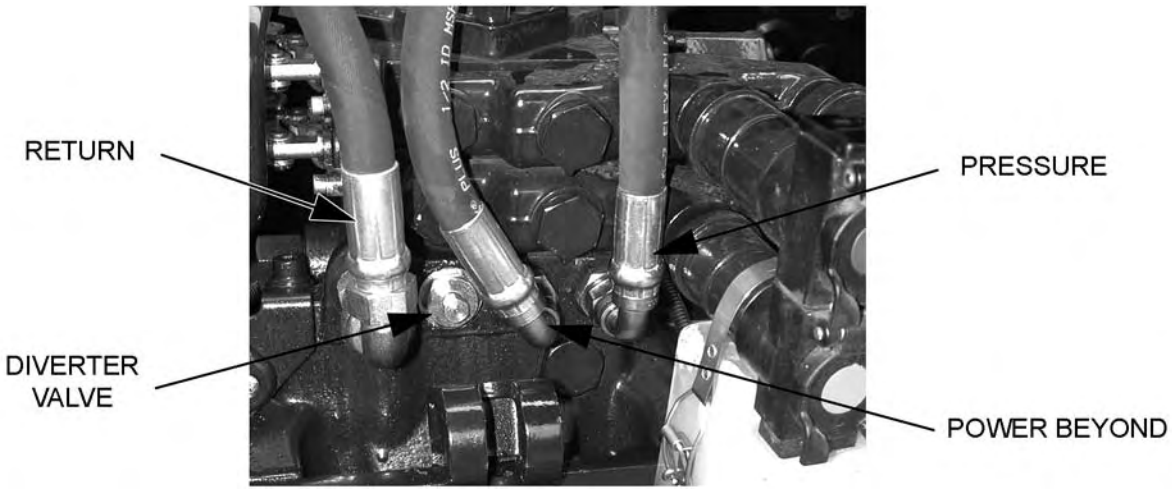

NH-0062A)

The Pressure and Return lines are routedthe same as stated above, however, the Load Sense line is routed differently. On a tractor with a cable control lift valve, the Load Sense line is routed directly to the power beyond remote on the tractor. On a tractor with an electronic lift valve, the load sense line is routed to the priority

LOAD SENSE HOSE ROUTING - CLOSED CENTER

On a tractor with a Closed Center system, thelift valve uses the Pressure and Return on the tractors rear remotes. The Load Sense line, however, is connected to a port above the right rear axle.

The Pressure hose is routed from the tractor remotes to the inlet port of the HP filter on the valve mounting bracket. Then, the outlet port of the HP Filter to the pressure port on the lift valve.

The Return hose runs from the return port of the lift valve to the tractor remotes.

The Load Sense hose is routed from the load sense port of the lift valve to the load sense port on the tractor.

For more information refer to the Parts Section page for a complete diagram of the tractor valve hookup. *(ASM-NH-0078)*

LIFT VALVE MOUNTING

Drill a Ï 9/16òhole in the fender frame tube of the tractor 3/4òback of the existing hole (away from cab). Install the valve mounting bracket to the inside of the right and left rear fender frame tube as shown below and attach it with hardware listed in the Parts Section of this manual. Repeat these steps for the left valve mounting bracket.

Align the valve mounting plate with the drilled holes. Mark the center of one of the holes above and in-line with the slotted holes in the valve plate. Do not use any holes that will be used to mount the valve onto the plate.

Mount the lift valve with the supplied hardware. Refer to the Parts Section for the details.

(ASM-NH-0066)

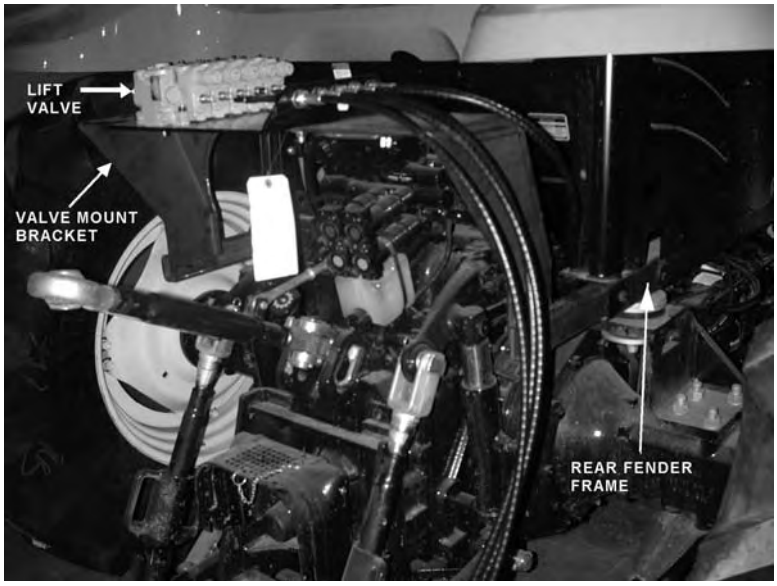

CABLE CONTROL LEVER STAND

Place the front edge of the support bracket 2-3/4òback from the lower right front window. Rotate stand to be 2-1/4òfrom the right door frame as shown below. Be sure that the location of the stand will allow clearance between the cable control handles and all existing interior levers, etc.

Drill 3 holes to match control bracket and secure with capscrews and nylock nuts noted in the Parts Section.

Cut a 2-1/4òhole in the door from inside the cab. This hole is to be located 2-1/2òaway from the floor, and 4òfrom the metal edge by the right door. Install trim lock around the metal edges of the then route the cables through the hole. Next, wrap the cables with the 6òsplit hose at the point they pass through the hole, and secure with zip-ties. *(ASM-NH-0058)*

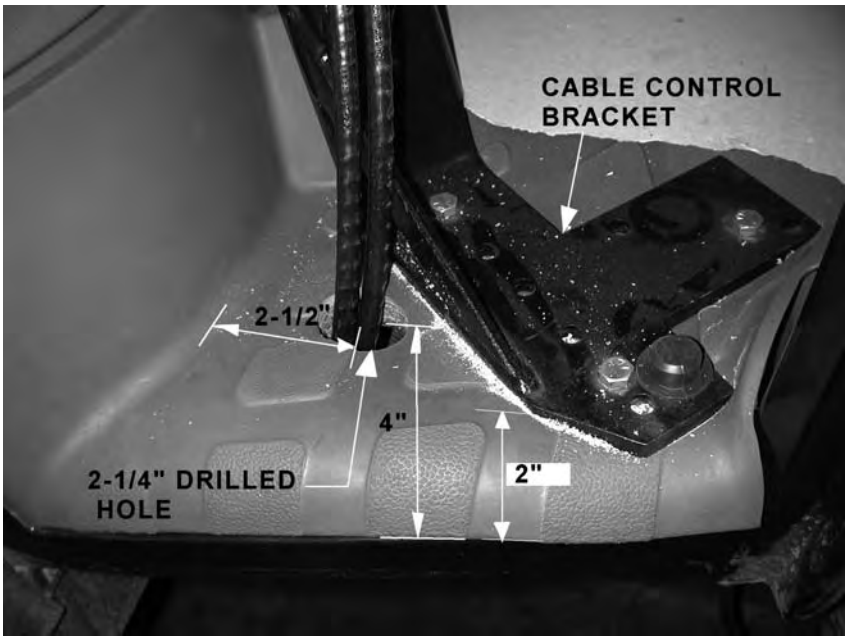

ELECTRONIC LIFT VALVE PORTS

(ASM-C-0089)

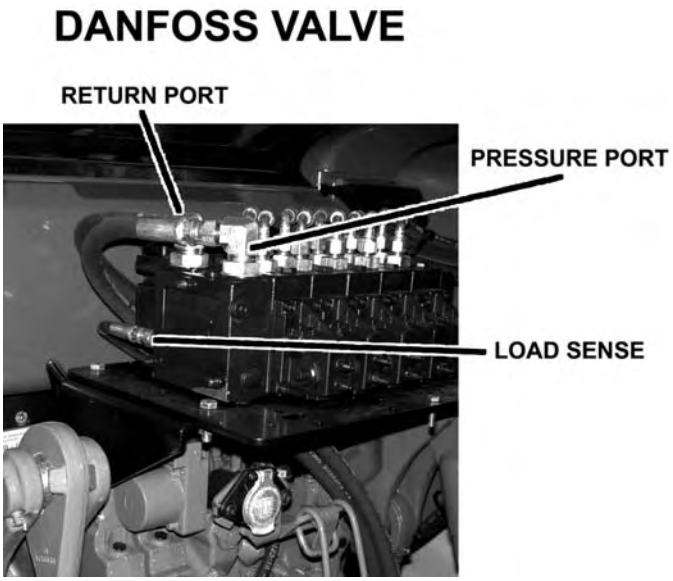

HIGH PRESSURE FILTER (JYSTCK CONTROL)

The high pressure filter is mounted to the right valve mounting bracket with hardware, as shown in the Parts Section. Attach the two adapters to the filter. The pressure line from the tractor is plumbed to the left (Inlet) side of the filter. The pressure hose that is attached to the right side of the filter is routed to the ñPò port of the priority valve. *(ASM-C-0032)*

SWITCHBOX MOUNTING (JOYSTICK)

Locate the 2 holes in the right front corner of the cab frame. These will be the mounting holes for the 2 mounting bolts of the switchbox bracket. Mount the bracket using the hardware supplied, as noted in the Parts Section. *(ASM-NH-0060)*

NEW HOLLAND PRIORITY VALVE USED ON DELTA & VALUE UNITS (DANFOSS)

The DanFoss lift valve needs a priority valve and the Delta and Value style tractor units need a NH priority valve plug in the tractor rear remotes for the proper hydraulic flow. Torque the body of the plug first to 94Nm and then the small end to 15Nm. The ports used are directly under the valve mounting plate. The illustration below shows these ports are in a row. From left to right the ports are used for ñreturn from DanFoss valveò, ñplug to allow activation of the next two portsò, ñreturn from EF port on priority valveòand ñpressure to valveò.

The pressure hose is routed from the tractor remotes to the inlet port of the HP filter on the valve mounting bracket. Then, the outlet port of the HP Filter to the ñPò port of the DanFoss priority valve. The DanFoss lift valve is fed through teh pressure hose from the ñCFò port to the pressure port of the lift valve.

The load sense line is routed from the load sense port on the DanFoss valve to the ñLSò port of the priority valve. The power beyond hose is routed from the ñEFò port of the priority valve to the tractor remotes.

The return hose runs from the return port of the DanFoss valve to the tractor remotes.

For more information refer to the Parts Section pages for a complete diagram of the tractor valve hookup. *(ASM-NH-0064)*

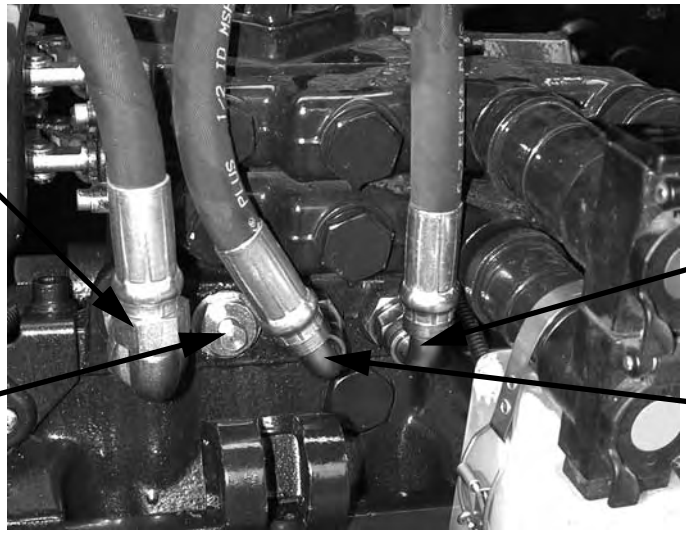

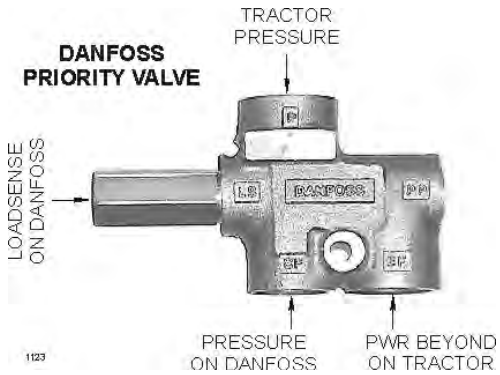

NEW HOLLAND TRACTOR REMOTE PRIORITY PLUG

LIFT VALVE MOUNTING

Drill a Ï 9/16òhole in the fender frame tube of the tractor 3/4òback of the existing hole (away from cab). Install the valve mounting bracket to the inside of the right and left rear fender frame tube as shown below and attach it with hardware listed in the Parts Section of this manual. Repeat these steps for the left valve mounting bracket.

Align the valve mounting plate with the drilled holes. Mark the center of one of the holes above and in-line with the slotted holes in the valve plate. Do not use any holes that will be used to mount the valve onto the plate.

Mount the lift valve with the supplied hardware. Refer to the Parts Section for the details.

(ASM-NH-0066)

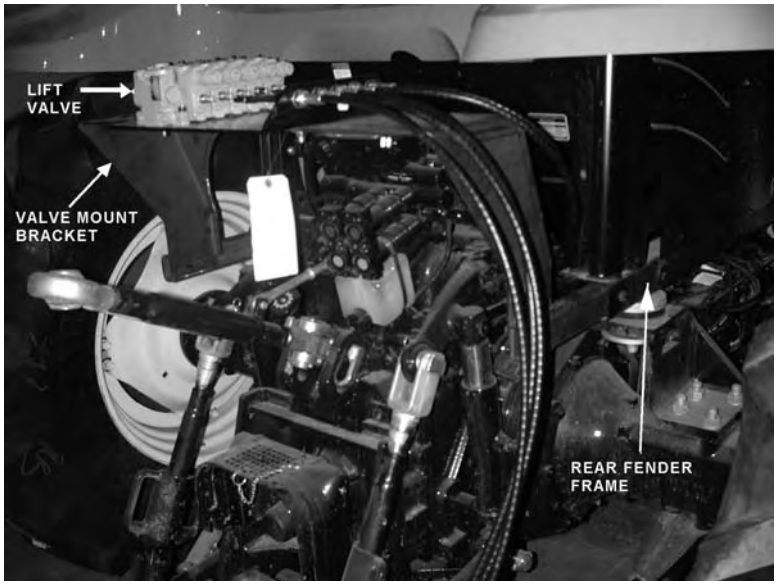

LIFT VALVE HOSE & CABLE ROUTING

Attach two clamps to the right rear wheel well for proper hose/cable routing. Drill one hole for each clamp. Use the lower rear corner of the wheel well as an origin for measuring. The holes should be Ï 10mm or Ï 3/8òreamed to accept 3/8òhardware.

Measure from the back edge of the wheel well 13-1/2ò from the origin. Use a square to measure 3-1/2òup. Refer to the images below to see the first hole placement.

The second hole should run parallel to the bottom edge of the wheel well. Mark the hole 12ò from the first hole and 3-1/2òfrom the bottom edge. Use the images below for reference.

NOTE: DO NOT CUT INTO TUBES / HOSES / WIRES WHEN DRILLING THROUGH METAL OR PLASTIC!

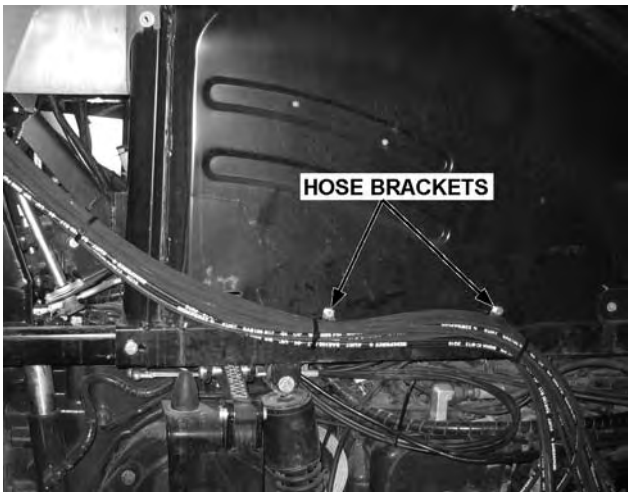

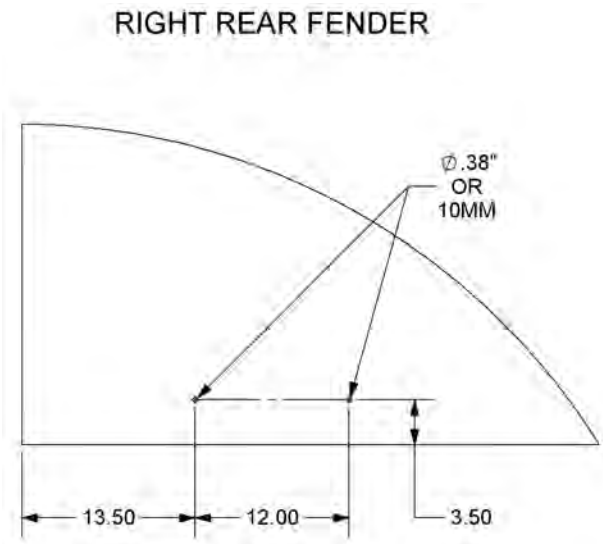

Place as many hoses in the clamp that will fit without compromising pressure. Then secure the (2) HOSE CLAMP (06520013) to the holes drilled with (1 EACH) CAPSCREW,3/8ò X 1ò,NC (21630) and (1 EACH) NYLOCK NUT,3/8ò,NC (21627). The hoses that donôt fit into the clamp are to be secured to the others with zip-ties. For protection of hoses in contact with metal edges, wrap hoses with split hose sections and fasten with hose clamps or zip-ties as needed.

(ASM-NH-0067)

JOYSTICK STAND MOUNT

Mount the Joystick Stand Mount in the same position as the Cable Control Lever Stand. Place the front edge of the support bracket 2-3/4òback from the lower right front window. Rotate stand to be 2-1/4òfrom the right door frame as shown below. Be sure that the location of the stand will allow clearance between the cable control handles and all existing interior levers, etc.

Drill 3 holes to match control bracket and secure with capscrews and nylock nuts noted in the Parts Section.

Cut a 2-1/4òhole in the door from inside the cab. This hole is to be located 2-1/2òaway from the floor, and 4òfrom the metal edge by the right door. Install trim lock around the metal edges of the then route the cables through the hole. Next, wrap the cables with the 6òsplit hose at the point they pass through the hole, and secure with zip-ties. *(ASM-NH-0059)*

BOOM JOYSTICK CONTROL CALIBRATION(FOR SABER)

SUB-D

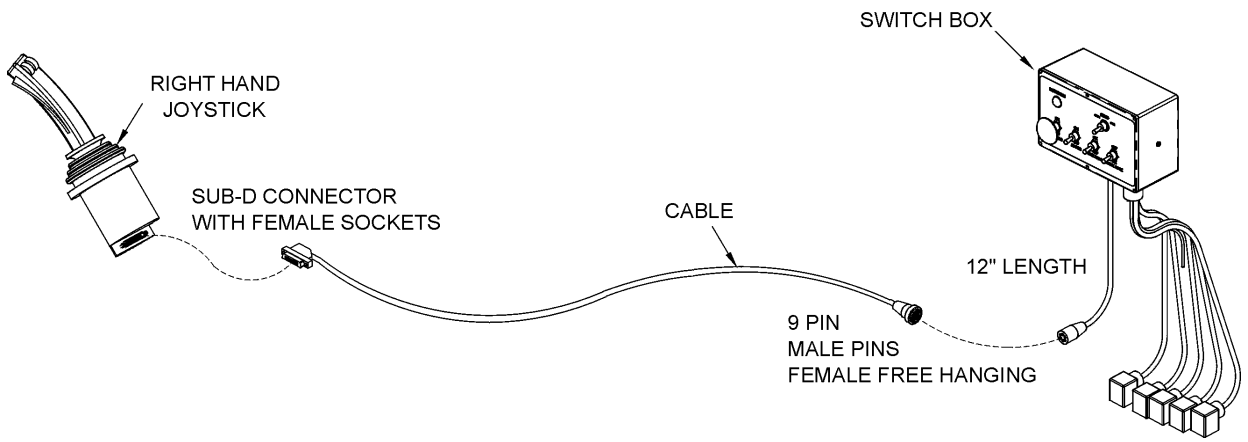

This Danfoss PVG32 control valve is now equipped with higher-resolution actuators on Main Boom, Secondary Boom, Deck Roll, and Swivel functions. These actuators have ñactive fault monitoringò. The Deck Shield section does not have ñactive fault monitoringò. The joystick is unchanged and provides a ratio-metric voltage signal. The neutral signal voltage is half or 50% of tractor supply voltage. A 25% signal voltage will shift the valve spool to full ñA-Portò, and 75% signal voltage will shift the spool to full ñB-Portòin the Main, Secondary, and Swivel valve sections. On the Deck Roll function a 34% signal voltage will shift the valve spool to full ñA-Portò and a 68% signal voltage will shift the spool to full ñB-portò. If an actuator with active fault monitoring receives a signal from the joystick that is less than 15% or greater than 85% of supply voltage the actuator will ñfault outò and shut down. Also if there is an internal failure in the actuator or if the spool position is greater than that specified by the signal voltage from the joystick, the actuator will ñfault outòand shut down. An ñactive faultò condition causes the actuator to drive the spool to neutral, shut down, and activate a ñredòLED on the top of the actuator. The active fault can be canceled by simply cycling the Master Switch ñOFFòand then ñONò, which resets the fault monitoring, and causes the LED on top of the actuator be ñgreenò again.

⚠ CAUTION The joystick control is equipped with signal adaption potentiometers.

These provide the capability to individually adjust the oil flow to each boom function. It is important that the boom functions do not travel too fast. Excessive boom speed can reduce the stability of the unit and decrease operator control.

Note: Use a Phillips screw driver and be sure to adjust the screws carefully! DO NOT turn the potentiometers beyond their stopping point, potentiometers are very delicate! Turning the ñAò or ñBòport potentiometers clockwise increases the oil flow to increase the boom function speed, and turning them counterclockwise decreases the oil flow to decrease the boom function speed. See the graphic on the next few pages for help in adjusting. *(ASM-DF CALIBRATION SBR-0001)*

Run tractor at normal operating RPM to adjust the settings as follows.

Set the dead band compensation potentiometer first.

Set the dead band compensation potentiometer at 50%, or halfway between full clockwise and full counter-clockwise.

Setting Signal Adaptation Potentiometers:

Disconnect the Deutsch connectors from the actuators of the valve. Use a Volt/Ohm meter to measure signal voltage and adjust the signal adaptation potentiometers as needed. Pin #4 is tractor supply voltage. Pin #1 is signal voltage from the joystick, and pin #3 is ground. First measure supply voltage between pins 4 and 3. Then measure signal voltage between pins 1 and 3 while indexing the joystick function fully in both the ñAò and ñBò port direction. Divide the signal voltage by the supply voltage to get signal voltage as a % of supply voltage. This percentage should not be less than 25% or greater than 75% for the Main Boom, Secondary Boom, or Swivel function. This percentage should not be less than 30% or greater than 62% for the Deck Roll function. Note these initial settings for the Deck Roll function should prevent the spool from shifting into float. *After making this first adjustment to deck roll if the spool still goes into float, adjust the ñBò port screw additionally counterclockwise.*

Reconnect Deutsch connectors on control cables to actuators on Danfoss valve. Run tractor until hydraulic system is at operating temperature. Now refine the adjustments of the signal adaptation potentiometers for both ñAò and ñBò ports for all proportional functions to achieve the following function times. Note: turning potentiometer clockwise increases the flow or the function speed, and turning them counter-clockwise decreases the flow or the function speed. Note, if during this procedure the trim potentiometer is set to full ñcounterclockwiseò but the function is still too fast, use the mechanical stops at the manual actuator end of the valve section to further limit flow. Turn limit screw in or clockwise to limit flow. The upper limit screw limits flow to ñB-portò, and the lower limit screw limits flow to ñA-portò. However DO NOT adjust the limit screw on ñB-portò of deck roll function. Limiting ñB-portò will prevent ñfloatò function.

ASSEMBLY

MAIN BOOM: ñAò Port, Boom Up: 8-10 Seconds
(Note: Extend secondary boom completely; roll deck to be level with ground, and lower main boom until deck is on ground. Now index main boom ñupò function and determine the time required for main boom to rise completely.)

ñBò Port, Boom Down: 6-8 Seconds
(Note: Extend secondary boom completely, roll deck to be level with ground, and raise the main boom to ñfull upò. Then index the main boom ñdownò function to determine the amount of time required for the deck to contact the ground. CAUTION: Stop the boom just as the deck contacts the ground.)

SECONDARY BOOM: ñAò Port, Boom Out: 8-10 Seconds
(Position main boom full up, roll deck out until deck cylinder is fully retracted, and bring secondary boom in completely. Then index the secondary boom ñoutò function and determine the time required for boom to extend out completely.)

ñBò Port, Boom In: 8-10 Seconds
(Position the main boom full up, roll deck out until deck cylinder is fully retracted, and extend secondary boom completely. Then index the secondary boom ñinò function and determine the time required for boom to come in.)

DECK ROLL: ñAò Port, Deck Out: 7-9 Seconds
(Raise main boom to vertical, extend secondary boom out slightly so that deck can be articulated without contacting the main boom, and roll deck in until deck cylinder is completely extended. Then index the deck roll ñoutò function and determine the time required for the deck to roll out.)

ñBò Port, Deck In: Target 5-6 Seconds (but DO NOT use Limit Screw)
(Raise main boom to vertical, extend secondary boom out slightly so that deck can be articulated without contacting the main boom, and roll deck out until deck cylinder is completely retracted. Then index the deck roll ñinò function and determine the time required for the deck to roll in.)

BOOM SWIVEL: ñAò Port, Boom Aft: 11-13 Seconds
(Extend booms completely; rotate head to be level with ground, lower main boom until deck is just above ground, and swivel boom full forward. Then index the boom swivel ñaftò function and determine the time required for the boom to swivel full aft. Use caution when doing this, stop boom before main boom contacts tire.)

ñBò Port, Boom Forward: 11-13 Seconds
(Extend booms completely, rotate head to be level with ground, lower main boom until deck is just above ground, and swivel boom full aft and until near tire. Then index the boom swivel ñforwardò function and determine the time required for the boom to swivel full forward.)

(ASM-DF CALIBRATION SBR-0001)

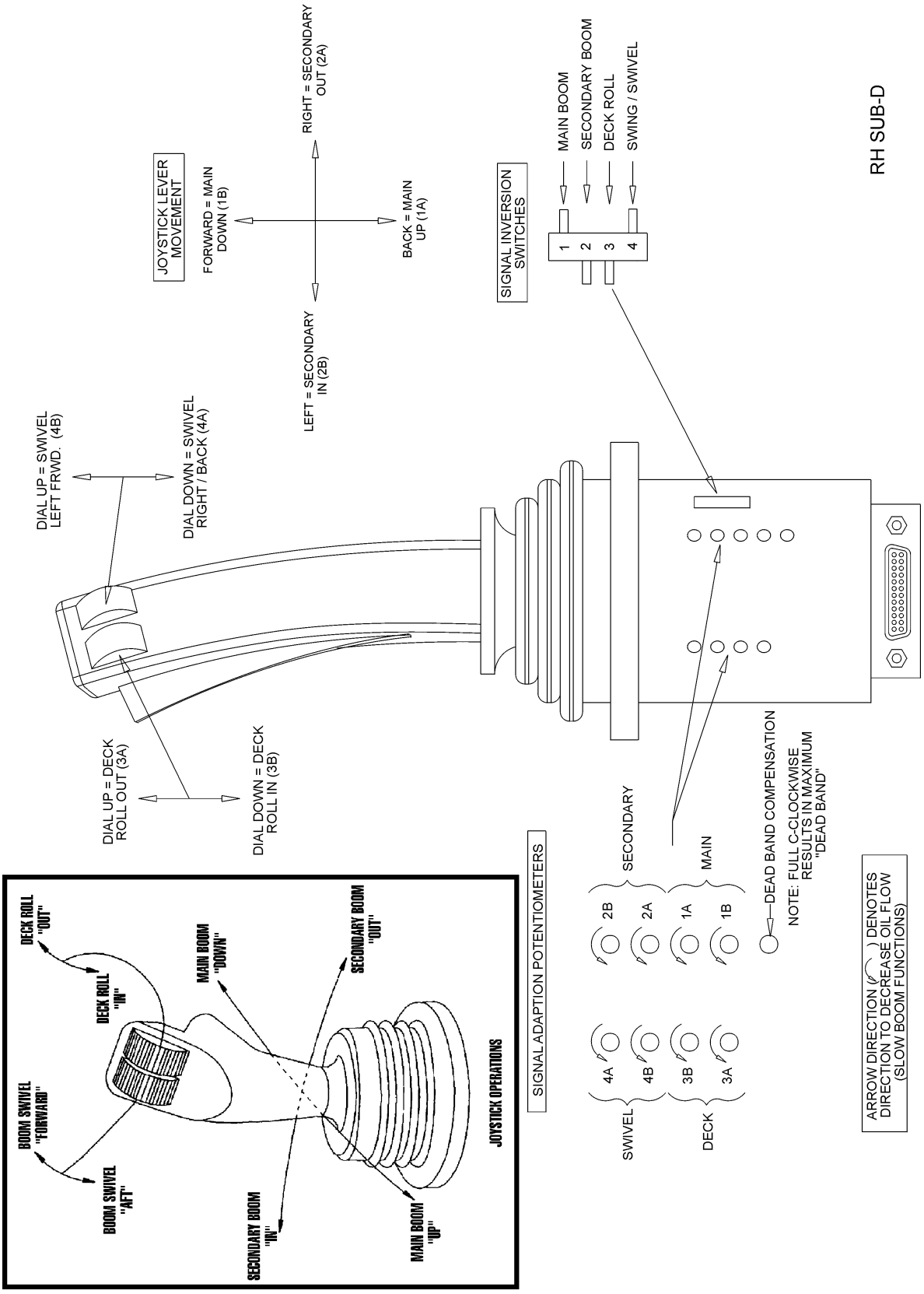

SABER HOSE ROUTING

WARNING NOTE: The sudden release of hydraulic pressure could cause the su dden movement of very heavy parts. Anyone in the way of these parts could be severely hurt or killed. DO NOT ALLOW these hydraulic hoses to BREAK or BURST in order to prevent hydraulic failure Make sure the hoses do not pinch or stretch as boom moves. Measure TWICE, check TWICE then proceed with caution.

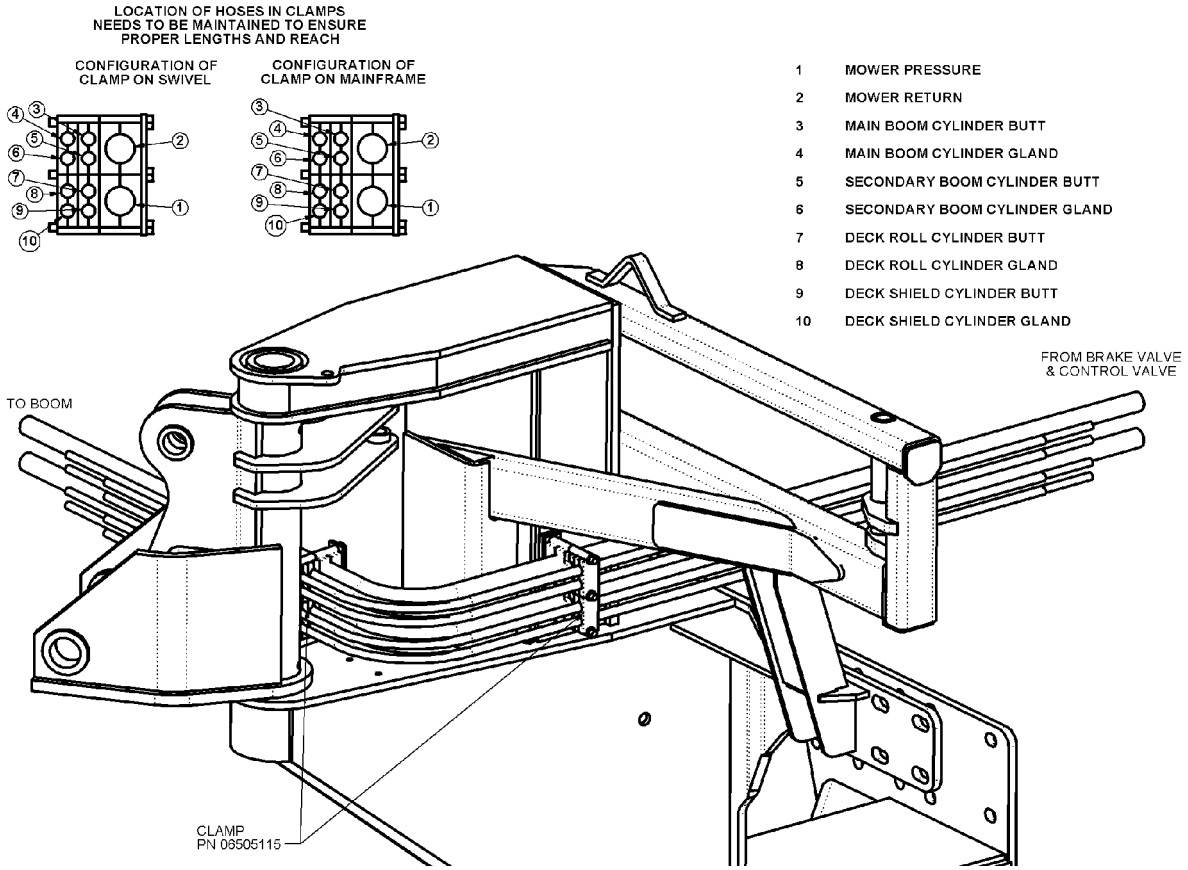

Connect the hoses to the preformed tubes and move the boom arm to the farthest forward position. Arrange the hoses in the clamp as shown in the illustration above, with the 1òmotor hoses to the outside, and loosely connect to the swivel. Next, make sure there is enough slack for all hoses to pivot at the joint where the main boom arm bends in the swivel, as shown in the next image, and tighten the hoses in the clamp. *(ASM-SBR HOSE ROUTING-0001)*

SABER HOSE ROUTING (CONTINUED)

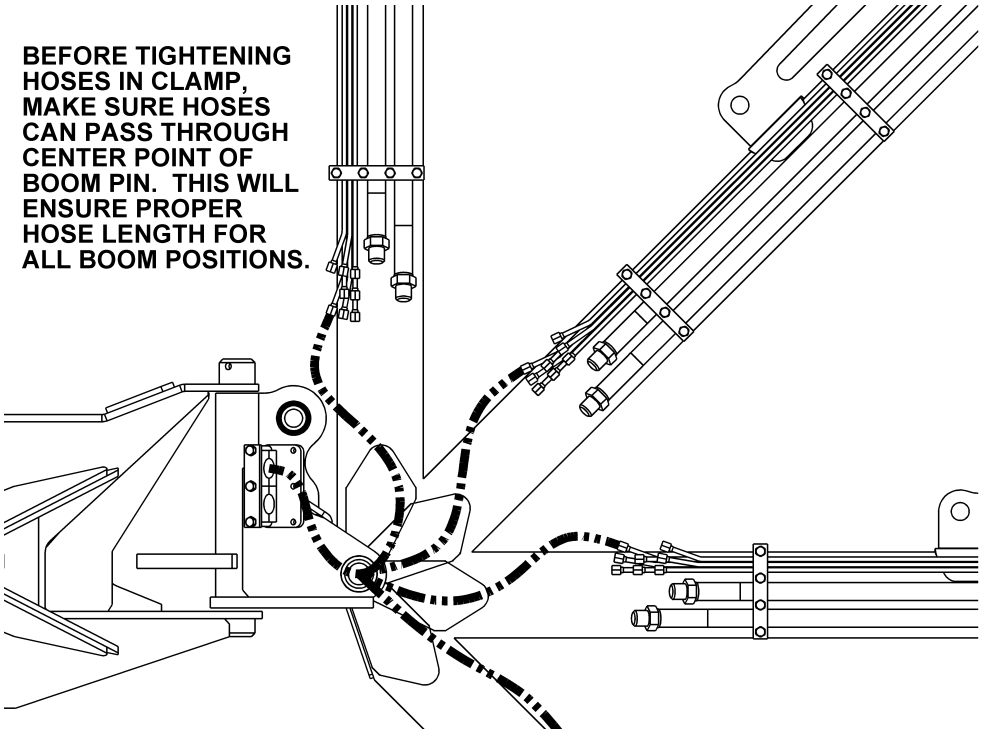

Arrange the hoses in the clamp that attaches to the boom mounting bracket as shown above, with the 1ò motor hoses closest to the main frame. Pull the hoses snug from the swivel to the main frame clamps, when main boom is fully forward, and tighten the hoses in the clamp.

Make sure the 1ò motor hoses do not kink as the boom arm is moved into the stowing position. If this happens the motor hoses will have to be shortened, because there is too much hose between clamps. *(ASM-SBR HOSE ROUTING-0001)*

(ASM-C-0023)

BOOM HYDRAULIC DIAGRAM

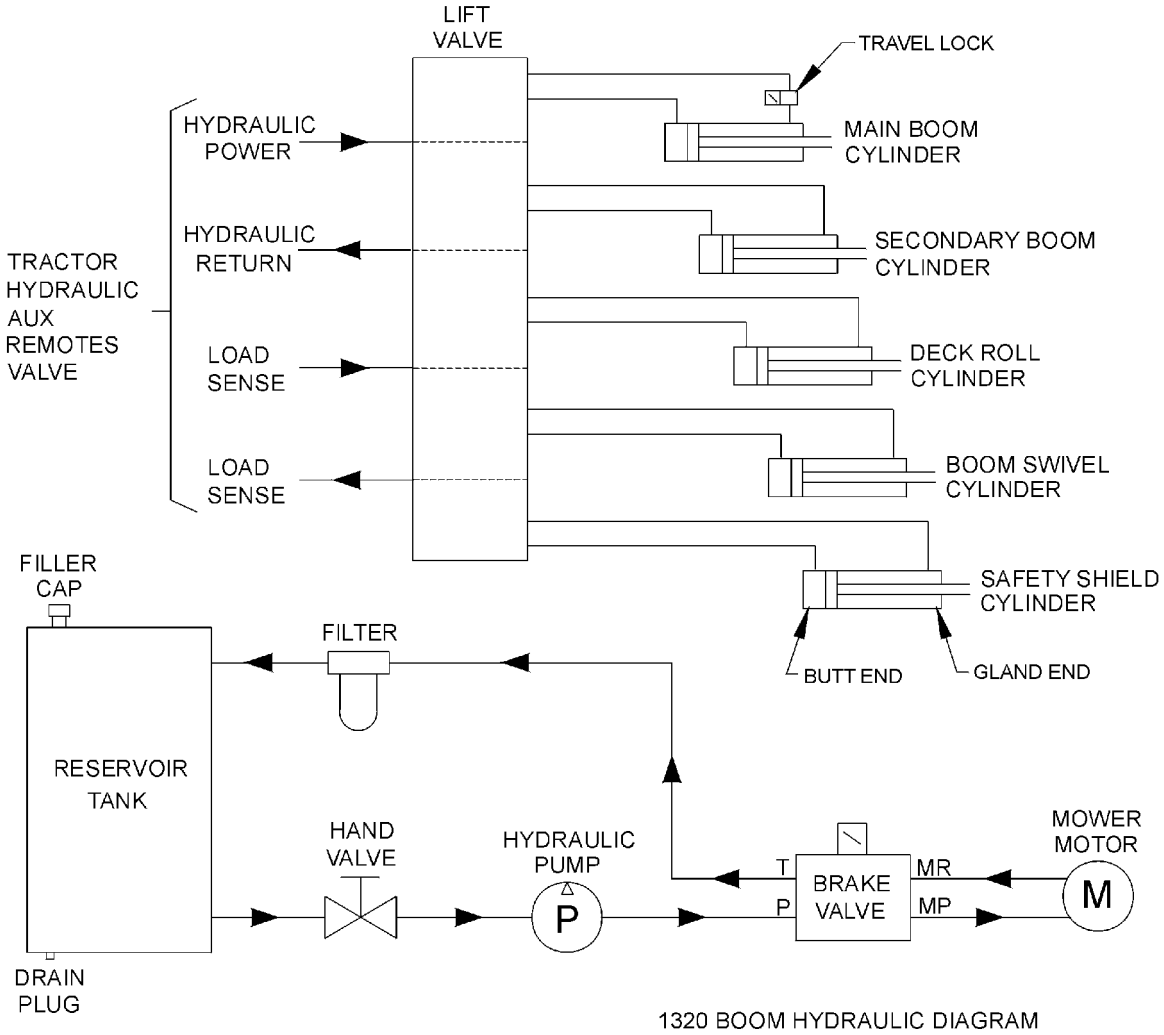

1320 BOOM HYDRAULIC DIAGRAM

SIDE HYDRAULIC TANK INSTALLATION

Install all fittings and tubes into tank and tank filter as shown in the Parts Section illustration. Insert tank sight glass into front side of tank.

Place the tank in the mounting bracket on the main frame as shown in the Parts Section. Secure the tank with the tank channel mount by placing the channel mount on top of the tank and the washers over the holes. Thread the tie bolts through the washers and holes to the threaded holes on the main frame. Tighten the tank channel mount by using the hex heads on the end of the tie bolts.

Install the filter gauge into the filter housing so that it points to the rear of the tractor and is clearly visible to the operator. The tank breather cap is ready for use as the tank is filled. Some of the for-metioned items may be already installed. *(ASM-MOTOR HYDRO-0001)*

FILLING HYDRAULIC RESERVOIR

Refer to the Maintenance Section for filling specifications and hydraulic oil requirements.

NOTE: Starting or running your T iger mower before filling reservoir will cause serious damage to hydraulic pump.

(ASM-C-0004hydro resrv)

INSTALLING O-RING FITTINGS

Installing straight, 45Üand 90ÜO-rings requires that the O-ring and washer be up against the swivel body. Insert the swivel and turn in until the swivel is pointed in the desired direction and O-ring contact is made. Hold swivel in set direction with a wrench and turn the O-ring nut away from the swivel body and carefully tighten. *(ASM-C-0056)*

INSTALLING NATIONAL PIPE FITTINGS

Whenever installing a pipe fitting, wrap the threads clockwise (looking at the end) with teflon tape. In this way, the tape will be tightened when installed. NOTE: It is not necessary to tape O-ring fittings, or those installed in swivels. *(ASM-C-0088)*

PREFORMED TUBE INSTALLATION

Lay booms on floor so that the side with the clamp plates is up. Locate all tube clamps and install them loosely onto the clamp plates.

Arrange the tubes and hoses as outlined in the Common Parts Section. Install the tubes closest to the boom arm first, being careful not to pinch the tubes. Place the other tubes outside of the first tubes. Snug all clamp bolts, but do not tighten. Check all tubes for correct alignment and that none are pinched or bent. The clamp bolts can now be tightened. *(ASM-C-0085)*

GENERAL HOSE INSTALLATION

Refer to the Parts Section for detailed information about hoses and fittings for this application. *(ASM-C-0011)*

HOSE COVERING

Secure hoses together with zip ties wherever loose. Wrap the hoses between the swivel and main boom with the hose cover provided. Wrap the hoses between the main boom and secondary boom with the hose cover provided. Where hoses may contact the frame or other edges, wrap with split hose and secure with hose clamps or zip ties.

On non cab units, the pressure and return hoses from the control valve will also need to be routed inside the protective clear hose wrap. Cover the valve, valve fittings with the yellow hose cover and secure with black string provided. *(ASM-C-0058)*

ACCUMULATOR INSTALLATION

Install the accumulator bracket on the right mainframe mast or lift valve mount, if applicable, with the capscrews, lockwashers and spacers, if applicable, as shown in the Parts Section. Install the accumulator in the bracket and secure with the hardware shown. Install fittings and hoses to the cylinder and control valve as shown in the Parts Section. **Use teflon tape on all pipe fittings (except O-rings).** *(ASM-C-0012)*

SOLENOID BRAKE VALVE

Install a solenoid valve on the mounting bracket with the supplied hardware as shown in the Parts Section in this manual. While installing the fittings to the brake valve, the electical coil on the spool may have to be removed to make room. When reinstalling the coil, it is important to use no more than 5 ft. lbs. (or 6 0in. lbs.) torque. WARNING: OVER TORQUE TO THE COIL WILL RESULT IN HYDRAULIC FAILURE OF SPOOL. *(ASM-C-0025)*

TEMPERATURE GAUGE MOUNTING (OPTIONAL)

Mount the temperature gauge where it is clearly visible to the operator. Attach the green (-) wire from the negative post on the gauge to a grounded bolt on the tractor frame. Remove paint if needed to make a good ground. Remove the pipe plug from the side of the hydraulic reservoir and install the temperature sensor using thread sealing tape. Run the white wire from the (s) sensor post of the gauge to the temperature sensor on the hydraulic reservoir tank. *(ASM-C-0051)*

WHEEL WEIGHT MOUNTING

For all tractors using a boom mower, a wheel weight will be required for the rear left side wheel. It will be necessary to mount the weight in the wheel using the long capscrews, lockwashers, flatwashers, spacers (if applicable), and hex nuts per the diagram in the parts section.

Installation is most easily done with a fork lift, inserting a fork in the center slot of the wheel weight. The head of the capscrews is to be toward the OUTSIDE of the weight, with flatwashers on both the inside and outside of the assembly.

The left rear tire may also be filled with a mixture of water and calcium chloride at about five pounds per gallon. Tire air pressure should be maintained according to the Maintenance Section. *(ASM-C-0055)*

CONTINUOUS DUTY SOLENOID SWITCH

Mount the solenoid switch, drill holes to match if necessary, in a dry and well protected area. Secure as shown in the Parts Section with provided 3/8òx 1òcapscrews, lockwashers, and hex nuts.

Route wires to and from the Continuous Duty Solenoid Switch as shown below.

A.) ORANGE 10 GA. wire from terminal (A) to +12V battery fusible link.

B.) RED 14 GA. wire from terminal (C) to tractor plug in cab.

C.) BLACK 14 GA. wire from terminal (B) to -12V battery post.

D.) RED 10 GA. wire from terminal (D) to switc box.

E.) RED 14 GA. wire from terminal (D) to temperature gauge. (optional). *(ASM-NH-0032)*

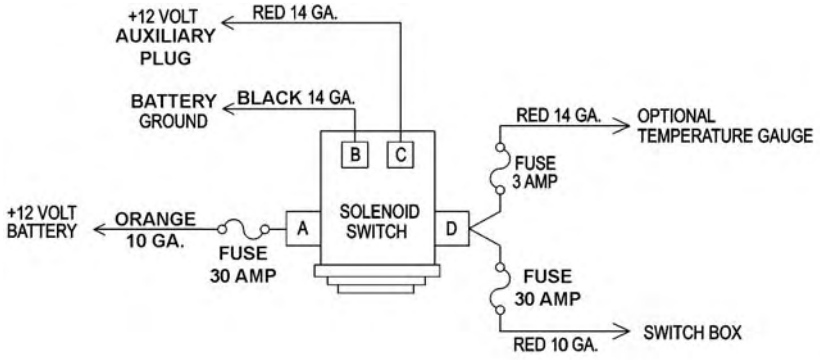

COOLER MOUNTING - SIDE TANK

Mount the cooler mounting brackets on the top rear side of the side hydraulic tank. Locate the bolt plates on the top of the tank and secure the appropriate cooler bracket to the tank with the hardware provided. Attach the screen and cooler to the brackets. Refer to the Parts Section to attach the hoses and adapters to the cooler. *(ASM-C-0092)*

SWIVEL BRACKET MOUNTING

Install the boom swivel bracket onto the boom mounting bracket with the swivel pin. Secure the pin in place using the capscrews, etc. through the hole in the boss and pin. NOTE: The head of the capscrew must be toward the front of the tractor.

Install all new swivels and fittings on the swing cylinder with swivel openings facing each other. Fittings will vary in type and direction depending on your application, refer to your parts section for more details.

Install bearings in the main frame anchor for the swing cylinder. This may already be done for you.

Install the swing cylinder between the boom mounting bracket cylinder anchor and the boom swivel with the pins. Insert roll pins through the top and the bottom hole in the pins.

Now the hoses can be attached from the control valve to the swing cylinder. *(ASM-C-0015)*

MAIN BOOM INSTALLATION

Install the boom swivel into the main frame as shown in the Parts Section using a hoist. Line up holes in swivel and mainframe for large swivel pin and insert pin. Secure with hardware as shown.

Attach the inner end of the main boom to the swivel bracket with the cylinder anchors positioned upward, and at a right angle to the tractor. Secure it with the horizontal hinge pin. Secure the hinge pin in the boss with capscrews, etc. (see Parts Section).

Attach the butt end of the main boom cylinder to the swivel with the cylinder pin and roll pins shown in the Parts Section.

Install the travel lock on the rod end of the main boom cylinder. This should be facing the butt end of the cylinder after installation.

Install the fittings and hoses to the main boom cylinder per Parts Section.

GREASE HINGE PIN ZERKS ON BOOM AFTER ASSEMBLY, ONCE UNDER LOAD WITH BOOM ELEVATED AND AGAIN AT REST WITH BOOM SUPPORTED *(ASM-C-0013)*

AXLE BRACE MOUNTING

The axle braces are to be mounted under the rear axle of the tractor with spacers. The other end of the axle braces mount to the outside of the lower rear corners of the mainframe. After attaching the boomrest, it should fit tightly and level under the tractor. Attach the axle braces to the mainframe with hardware shown in the Parts Section and tighten. Attach the axle braces to the rear axle using the axle spacers and mounting hardware shown in the Parts Section, but DO NOT tighten.

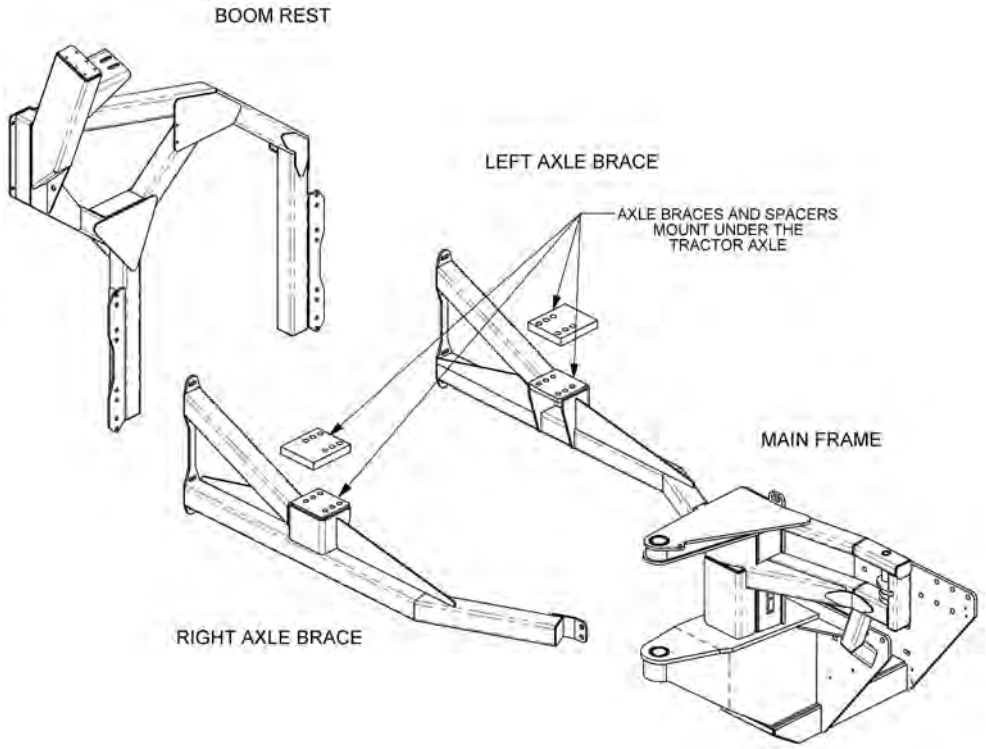

BOOMREST MOUNTING

Carefully raise the boomrest and align the holes with those of the axle brace. Now install all attaching hardware, as shown in the Parts Section, loosely, to allow for the alignment with the left and right axle brace. Tighten / torque all hardware on the brace and the boomrest. Finally, add the rest strips to the boomrest as shown in the Parts Section. *(ASM-JD-0095)*

BOOM MOUNTING BRACKET

Using a floor jack and/or a hoist, raise the boom mounting bracket up to level and slide the bracket into position onto the mainframe as shown in the Parts Section.

Install the pin through mainframe and bracket. Secure with capscrew and nylock nut through the boss on the mainframe.

Secure mounting bracket to the mainframe with the capscrews, flatwashers, cut flatwashers and nylock nuts provided. Secure through the two slotted holes on the bracket and mainframe. *(ASM-C-0084)*

DECK ATTACHMENT

Attach the head to the se condary boom using the pin s and hardware shown in the Part s Section. Install the deck pivot cylinder using the pins and hardware also shown in th e Parts Section.

Connect the fittings and hoses from the pivot cylinder to the small preformed tubes on the boom arm. Connect the fittings and hoses from the motor to the large preformed tubes on the boom arm. If attaching a rotary mower make sure that the hose with the red stripe sticker is attached to the motor pressure port which is marked with a red dot sticker.

Connect all remaining hoses from the control valve to the cylinders and/or preformed tubes on the boom arm. *(ASM-C-0086)*

2WD FRONT AXLE ADJUSTMENT

In order to prevent interferences with mounted equipment, the front axle on a 2WD T6000 tractor will have to be adjusted outwards to show 2 holes on each side (see illustration below). Double check the wheel spacing after adjustment by oscillating and turning the tires fully for interference.. *(ASM-NH-0068)*

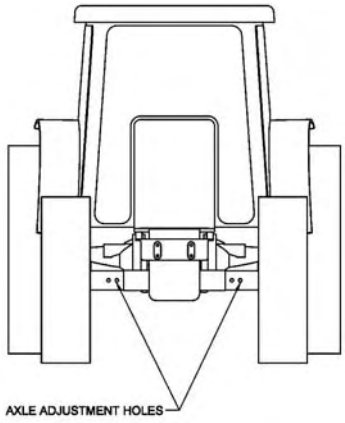

4WD FRONT WHEEL ADJUSTMENT

In order to prevent interferences with mounted equipment, the front wheels on a 4WD T6000 tractor will have to be adjusted to be approximately 68ò center to center distance (see illustration below). For tractors with mounted loaders, that distance should be approximately 76ò Double check the wheel spacing after adjustment by oscillating and turning the tires fully for interference.. *(ASM-NH-0069)*

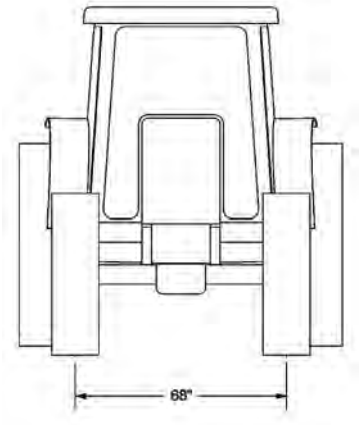

4WD FRONT AXLE STOPS

In order to prevent interferences with mounted equipment, the front axle on a 4WD tractor with wheels larger than 13.6 X R24 will have to be limited. On each side of the front axle the following procedure must be followed.

The existing spacer and capscrews will need to be removed and a new Tiger Spacer (p/n 06401546) will need to be added. Sandwich the Tiger Spacer between the tractor and the existing spacer. The capscrews which were removed will need to be replaced by two longer Tiger Capscrews (p/n 06530105).

After adding the Tiger Spacer to each side, double-check the adjustment by oscillating and turning the tires fully for interference. *(ASM-NH-0077)*

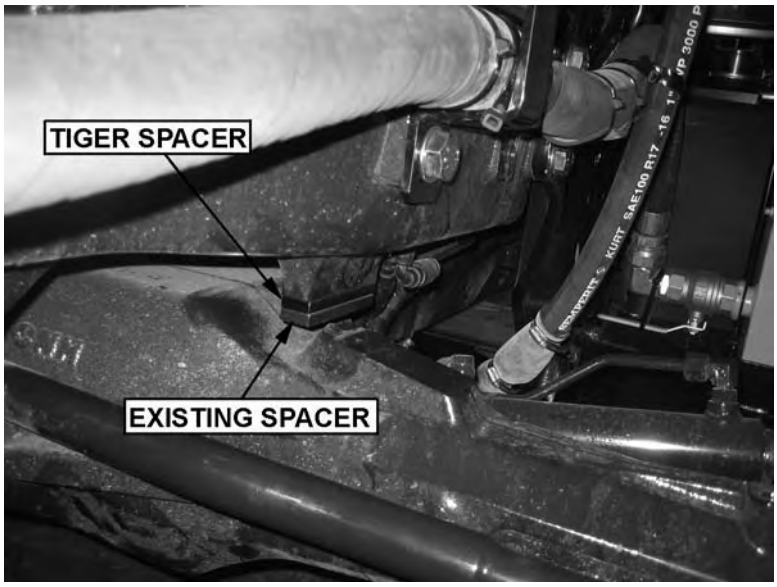

FINAL PREPARATION FOR OPERATION

Place operator's safety and operation decals on the steering column and side console where they are clearly visible to the operator. These decals should be understood by each operator of the machine in conjunction with the Safety and Operation Section of this book. The decals are to be maintained in good condition as a reminder to the operat or, and should be replaced if damaged.

Finally, all bo sses, pins and pivot points will need to be greased as instructed in the Maintenance Section of this manual. The hydraulic reservoir can al so be filled with the recommended fluid (see Maintenance Section) and the filter installed in the top of the t ank. Double check all fittings and fasteners BEFORE starting tractor. Also secure any loo se hoses together with zip ties and wrap with split hoses where friction may occur on the hoses.

⚠WARNING BEFORE starting or operating the tractor you must read and understand the Safety and Operation Sections of this manual completely.

BE SURE THE BALL VALVES ARE OPEN! Start tractor and allow instruments to stabilize. Using a piece of paper or cardboard as noted in the Safety and Maintenance Sections, check all fittings and connections for hydraulic leaks.

If a leak is found, you must shut down the tractor, set t he cutter on the ground. Before attempting to fix the leak, you must actuate the lift valve handles several times to relieve any pressure in the lines.

Before operating the mower, the cutter head and boom should be slowly moved throughout the full range of motion. Watch for any condition that would cause pinching or excess stress on the hoses. The steering and front axle travel should also be carefully moved thro ugh their full range of motion. If any condition occurs in which the ho ses contact the tires, the steering and / or front axle travel may need to be limited as described in the tractor operator's manual. This should also be done if the tires rub, or are extremely close to any other part of the mower such as the hydraulic tank or draft beam. This may include adding shims, or adjusting stop bolts in the tractor front to solve the problem. While checking motion, you should also check that the control circuits are connected according to the operator's decal for the valve handles.

MOWER TESTING

Take the tractor to a place free of loose objects on the ground. Operate the cylinders through their full range of motion again, to clear the lines of air. Fo llow the instructions in the Operation Section to operate the mower. Vibration of the mower should be minimal at all times. After a 5 minute test run, the knife bolts should be retorqued and once again after the first few hours of operation.

If any parts of this Assem bly Section, or any other section of this manual are not clearly understood you must contact your dealer or the address on the front of this manual for assistance! *(ASM-C-0010)*

OPERATION SECTION

TIGER SABER BOOM MOWER OPERATING INSTRUCTIONS

Safety is of pr imary importance to th e owner/operator and to the manufacurer. Tiger Saber Booms are manufactured with quality material by skilled workers. The first section of this manual includes a list of Safety Messages, that, if followed, will help protect the operator and bystanders from injury or death. The Saber Boom is equipped with sa fety warning decals, protective deflectors, shields and other safety fea tures to provide operator and passerby protection, however, no shielding is 100% accurate. All safety eq uipment and safety warning decals must be maintained on the u nit in good operational condition at all times. It is the operators responsibility to be knowledgeable of all potential hazards and to take every reasonable precaution to ensure oneself, others, animals, and property are not injured or damaged by the boom unit, tractor or a thrown object. Do not operate the boom and attached head if bystanders,passerby, pets or livestock are within 300 feet of the unit. Many of the messages will be r epeated throughout the manual. T he owner / operator / dealer should know these Safety Messages and Operating Instructions before assembly and be aware of the hazards of operating this mower during assembly, use, and maintenance of this equipment.

The Safety Alert Symbol combined with a signal word, as seen below, is intended to warn the owner / operator ofimpending hazards and the degree of injury possible during operation.

DANGER Indicates an imminently hazardous situation that, if not avoided, WILL res ult in DEATH OR VERY SERIOUS INJURY.

WARNING Indicates an imminently hazardous situation that, if not avoid ed, COULD result in DEATH OR SERIOUS INJURY.

CAUTION Indicates an imminently hazardous situation that, if no t avoided, MAY result in MINOR INJURY.

Important Identifies special instructions or procedures that, if not strictly observed, could result in damage to, or destruction of the machine, attachments or the environment.

NOTE: *Identifies points of particular interest for more efficient and convenient operation or repair.*

This section of the Operator's Manual is designed to familiarize, instruct and educate operators to the safe and proper use of the Saber Boom. Pictures contained in this section are intended to be used as a visual aid to assist in explaining the operation of a Saber Boom and are not specific to a Saber Boom. Some pictures may show shields removed to enhance visual clarity. NEVER operate the boom unit without all safety equipment in place and in good operational condition. The operator must be familiar with the boom unit and tractor operation and all safety practices before beginning operation. Proper operation, as detailed in this manual, will help ensure years of safe and satisfactory use of the Saber Boom.

READ AND UNDERSTAND THE ENTIRE OPERATING INSTRUCTIONS AND SAFETY SECTION OF THIS MANUAL AND THE TRACTOR MANUAL BEFORE ATTEMPTING TO USE THE TRACTOR AND IMPLEMENT. If you do not understand any of the in structions, contact your nearest authorized dealer for a full explanation. Pay close attention to all safety signs and safety messages contained in this manual and those affixed to the implement and tractor. *(OPS-U- 0001)*

READ, UNDERSTAND, and FOLLOW the following Safety Messages. Serious injury or death may occur unless care is taken to follow the warnings and instructions stated in the Safety Messages. Always use good common sense to avoid hazards. (SG-2)

PELIGRO Si no lee ingles, pida ayuda a alguien que si lo lea para que le traduzca las medidas de seguridad. (SG-3)

1.OPERATOR REQUIREMENTS

Safe operation of the unit is the responsibility of a qualified operator. A qualified operator has read and understands the implement and tractor Operator's Manuals and is experienced in implement and tractor operation and all associated safety practices. In addition to the safety messages contained in this manual, safety signs are affixed to the implement and tractor. If any part of the operation and safe use of this equipment is not completely understood, consult an authorized dealer for a complete explanation.

If the operator cannot read the manuals for themselves or does not completely understand the operation of the equipment, it is the responsibility of the supervisor to read and explain the manuals, safety practices, and operating instructions to the operator.

Safe operation of equipment requires that the operator wear approved Personal Protective Equipment (PPE) for the job conditions when attaching, operating, servicing, and repairing the equipment. PPE is designed to provide operator protection and includes the following safety wear:

PERSONAL PROTECTIVE EQUIPMENT (PPE)

- Always Wear Safety Glasses
- Hard Hat
- Steel Toe Safety Footwear
- Gloves
- Hearing Protection
- Close Fitting Clothing
- Respirator or Filter Mask (depends on operating conditions) *(OPS-U- 0002)*

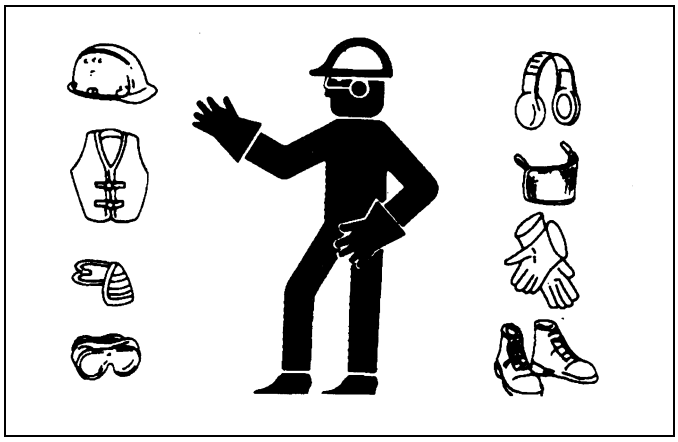

DANGER

NEVER use drugs or alcohol immediately before or while operating the Tractor and Implement. Drugs and alcohol will affect an operator's alertness and coordination and therefore affect the operator's ability to operate the equipment safely. Before operating the Tractor or Implement, an operator on prescription or over-the-counter medication must consult a medical professional regarding any side effects of the medication that would hinder their ability to operate the Equipment safely. NEVER knowingly allow anyone to operate this equipment when their alertness or coordination is impaired. Serious injury or death to the operator or others could result if the operator is under the influence of drugs or alcohol. (SG-27)

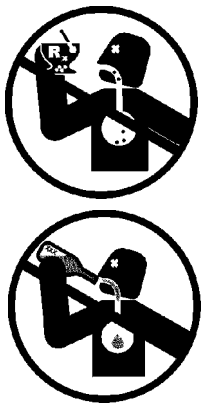

2.TRACTOR REQUIREMENTS

In addition to tractor horsepower and size required to operate the boom unit, the tractor must also be properly equipped to provide operator protection, to alert approaching vehicle drivers of the tractorôs presence, and to ensure tractor stability when mowing with the boom fully extended.

Tractor Requirements and Capabilities

- ASAE approved Roll-Over Protective Structure (ROPS) or ROPS cab and seat belt.
- Operator Protection ..... Tractor must be equipped with protective structure such as operatorôs cage or lexan window to protect operator from thrown object and falling objects
- Tractor Safety Devices ..... Slow Moving Vehicle (SMV) emblem, lighting,
- Tractor Ballast ..... As required to maintain at least 1500 lbs. on left rear tire

2.1 ROPS and Seat Belt

The tractor must be equipped with a Roll-Over-Protective-Structure (ROPS) (tractor cab or roll-bar) and seat belt to protect the operator from falling off the tractor, especially during a roll over where the driver could be crushed and killed. Only operate the tractor with the ROPS in the raised position and seat belt fastened. Tractor models not equipped with a ROPS and seat belt should have these life saving features installed by an authorized dealer. *OPS-U- 0003*

WARNING Operate this Equipment only with a Tractor equipped with an approved roll-over-protective system (ROPS). Always wear seat belts. Serious injury or even death could result from falling off the tractor--particularly during a turnover when the operator could be pinned under the ROPS. (SG-7)

2.2 Operator Thrown Object Protection

The tractor must be equipped with protective equipment to shield the operator from falling and thrown objects. For cab tractors, the tractor must be equipped with an operator safety screen on its right side or the right side windows must be fitted with a shatter resistant safety window. For non-cab tractors, the tractor must be equipped with a ROPS and operator protective safety cage that provides protection to the right and above the operator seat. DO NOT remove the ROPS from non-cab tractors to equip a safety cage.

OPS-B- 0001

DANGER Never operate the Tractor and Mower Unit without an OPS (Operators Protective Structure) or Cab to prevent injury from objects thrown from ground or from overhead trimming. Stop mowing if workers or passersby are within 300 feet. (SBM-9)

2.3 Tractor Lighting and SMV Emblem

If the tractor will be operated near or traveled on a public roadway it must be equipped with proper warning lighting and a Slow Moving Vehicle (SMV) emblem which are clearly visible from the rear of the unit. Most tractorôs have different settings for operating and transporting lighting. Refer to the tractor operatorôs manual for using the tractorôs light switch and operating the turn signals.

OPS-B- 0017

2.4 Tractor Ballast

To ensure tractor stability when operating on flat surfaces the left rear tractor tire MUST exert a minimum down force (weight) of 1500 lbs. on the ground when the tractor is on level ground, its boom is fully extended and the mower head is horizontal and two feet above the ground. For units which have the ability to operate on either side of the tractor, these requirements must also be met for the right side tire when the boom is extended to the left side as described above. A tractor that does not meet this criteria is DANGEROUS and should not be operated as upset of the unit can occur resulting in possible serious injury and property damage. NOTE: All factory mounted units are tested and meet the ballast requirement before shipment; further testing is not required unless the unit is operated in a manner other than what is considered standard operating conditions.

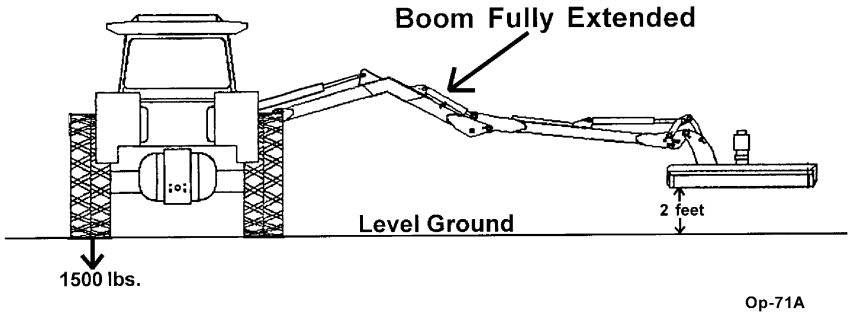

If the unit is operated on slopes greater than 5°, additional counterweight will be required. Operation of the unit on slopes greater than 11 percent (6.4 degrees) is not recommended under any circumstances. On a tractor with a 96ò outside to outside tire spread, an 11 percent (6.4 degrees) slope occurs when one rear tractor tire is about 8ò lower than the other rear tire. *OPS-B- 0018*

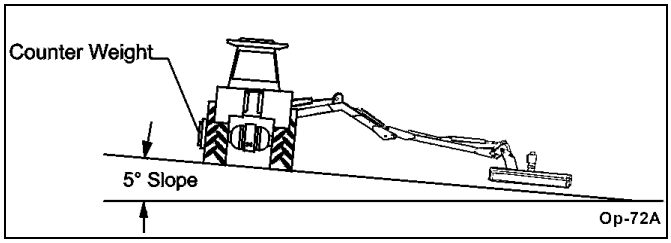

3.GETTING ON AND OFF THE TRACTOR

Before getting onto the tractor, the operator must read and completely understand the implement and tractor operator manuals. If any part of either manual is not completely understood, consult an authorized dealer for a complete explanation. *OPS-U- 0007*

WARNING Do not mount or dismount the Tractor while the tractor is moving. Mount the Tractor only when the Tractor and all moving parts are completely stopped. (SG-12)

DANGER Never operate the Tractor and Mower Unit without an OPS (Operators Protective Structure) or Cab to prevent injury from objects thrown from ground or from overhead trimming. Stop mowing if workers or passersby are within 300 feet. (SBM-9)

3.1 Boarding the Tractor

Use both hands and equipped handrails and steps for support when boarding the tractor. Never use control levers for support when mounting the tractor. Seat yourself in the operator's seat and secure the seat belt around you.

Never allow passengers to ride on the tractor or attached equipment. Riders can easily fall off and be seriously injured or killed from falling off and being ran over. It is the operator's responsibility to forbid all extra riders at all times. *OPS-U- 0008*

DANGER Never allow children to operate, ride on, or come close to the Tractor or Implement. Usually, 16-17 year-old children who are mature and responsible can operate the implement with adult supervision, if they have read and understand the Operator's Manuals, been trained in proper operation of the tractor and Implement, and are physically large enough to reach and operate the controls easily. (SG-11)

3.2 Dismounting the Tractor

Before dismounting the tractor, idle the tractor engine down, disengage the head and retract the boom arm to the transport position. Park the tractor on a level surface, place the transmission in neutral and set the parking brake. Shut down the tractor engine, remove the key, and wait for all motion to come to a complete stop before exiting the operator's seat. NEVER leave the seat until the tractor, its engine, and mower head movement have come to a complete stop.

Use hand rails and extra steps when exiting the tractor. Be careful of your step and use extra caution when mud, ice, snow, and other matter has accumulated on the steps and handrails. Never rush or jump off the tractor. *OPS-B- 0002*

DANGER BEFORE leaving the tractor seat, always set the parking brake and/or set the tractor transmission in parking gear, disengage the PTO, stop the engine, remove the key, and wait for all moving parts to stop. Place the tractor shift lever into a low range or parking gear to prevent the tractor from rolling. Never dismount a Tractor that is moving or while the engine is running. Operate the Tractor controls from the tractor seat only. (SG-9)

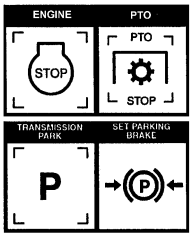

4.STARTING THE TRACTOR

The operator must have a complete understanding of the placement, function, and operational use of all tractor controls before starting the tractor. Review the tractor operator's manual and consult an authorized dealer for tractor operation instructions if needed.

Essential Tractor Controls:

- Locate the ignition key/switch
- Locate the engine shut off control
- Locate the hydraulic control levers
- Locate the light control lever
- Locate the brake pedals and clutch
- Locate the PTO control
- Locate the 3 point hitch control lever
- Locate the boom operating controls (joystick or valve bank)

Before starting the tractor ensure the following:

- Conduct all pre-start operation inspection and service according to the tractor operator's manual.
- Make sure all guards, shields, and other safety devices are securely in place.
- The parking brake is on.
- The tractor transmission levers are in park or neutral.
- The boom operating controls are in the neutral and off position.
- The PTO control lever is disengaged.
- The hydraulic remote control levers are in the neutral position.

Refer to the tractor owner's manual for tractor starting procedures. Only start the tractor while seated and belted in the tractor operator's seat. Never bypass the ignition switch by short circuiting the starter solenoid. After the tractor engine is running, avoid accidental contact with the tractor transmission to prevent sudden and unexpected tractor movement. *OPS-B- 0003*

DANGER Never run the Tractor engine in a closed building or without adequate ventilation. The exhaust fumes can be hazardous to your health. (SG-23)

DANGER Start tractor only when properly seated in the Tractor seat. Starting a tractor in gear can result in injury or death. Read the Tractor operators manual for proper starting instructions. (SG-13)

WARNING When rotating parts are in motion, serious injury may occur if caution is not used or danger is not recognized. Never allow bystanders with 300 yards of the machine when mower is in operation.

WARNING Be sure the ball valve on the mower hydraulic tank are OPEN before starting the tractor. Serious damage to the hydraulic system can occur if the valves are not open

5.PRE-OPERATION INSPECTION AND SERVICE

Before each use, a pre-operation inspection and service of the implement and tractor must be performed. This includes routine maintenance and scheduled lubrication, inspecting that all safety devices are equipped and functional, and performing needed repairs. DO NOT operate the unit if the pre-operation inspection reveals any condition affecting safe operation. Perform repairs and replacement of damaged and missing parts as soon as noticed. By performing a thorough pre-operation inspection and service, valuable down time and repair cost can be avoided. *OPS-U-0029*

WARNING Periodically inspect all moving parts for wear and replace when necessary with authorized service parts. Look for loose fasteners, worn or broken parts, and leaky or loose fittings. Make sure all pins have attaching hardware. Serious injury may occur from not maintaining this machine in good working order. (SG-21_A)

DANGER All Safety Shields, Guards and Safety devices including (but not limited to) - the Deflectors, Chain Guards, Steel Guards, Gearbox Shields, PTO integral shields, and Retractable Door Shields should be used and maintained in good working condition. All safety devices should be inspected carefully at least daily for missing or broken components. Missing, broken, or worn items must be replaced at once to reduce the possibility of injury or death from thrown objects, entanglement, or blade contact. (SGM-3)

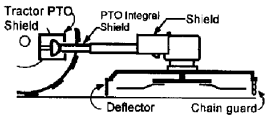

5.1 Tractor Pre-Operation Inspection/Service

Refer to the tractor operatorõs manual to ensure a complete pre-operation inspection and scheduled service is per formed according to the manufacturers recommendations. The following are some of the items that require daily service and inspection:

- Å Tire condition/air pressure
- Å Wheel lug bolts
- Å Steering linkage
- Å PTO shield
- Å SMV sign is clean and visible
- Å Tractorõs lights are clean and functional
- Å Tractor Seat belt is in good condition
- Å Tractor ROPS is in good condition
- Å ROPS is in the raised position
- Å No tractor oil leaks
- Å Radiator free of debris
- Å Engine oil level and condition
- Å Engine coolant level and condition
- Å Power brake fluid level
- Å Power steering fluid level
- Å Fuel condition and level
- Å Sufficient lubrication at all lube points
- Å Air filter condition *OPS-U-0030*

5.2 Boom Unit Pre-Operation Inspection and Service

Inspect and service the boom arm and head prior to operation. Damaged and/or broken parts should be repaired and/or replaced immediately. To ensure the unit is ready for operation, conduct the following: *OPS-B- 0020*

WARNING Periodically inspect all moving parts for wear and replace when necessary with authorized service parts. Look for loose fasteners, worn or broken parts, and leaky or loose fittings. Make sure all pins have attaching hardware. Serious injury may occur from not maintaining this machine in good working order. (SG-21_A)

The operator's manual and safety signs affixed on the unit contain important instructions on the safe and proper use of the equipment. Maintain these important safety features on the implement in good condition to ensure the information is available to the operator at all times.

- Ensure all safety signs are in place and legible. Replace missing, damaged, and illegible decals. *OPS-U- 0011_A*

FRAME ASSEMBLY

- Inspect condition of mounting frame weldment.
- Inspect condition of Swivel Assy.
- Ensure all bolts and screws are in position and are properly torqued.
- Ensure all pins are in place and fastened with screws.
- Ensure frame is properly mounted to tractor and hardware is propely installed and tightened. *OPS-B- 0021_SBR*

WARNING Never Leave the mower unattended while the head is in the raised position. The mower could fall causing serious injury to anyone who might inadvertently be under the mower (SBM-4)

WARNING Relieve hydraulic pressure prior to doing any maintenance or repair work on the Implement. Place the Mower Head on the ground or securely supported on blocks or stands, disengage the PTO, and turn off the engine. Push and pull the control Levers or Joystick several times to relieve pressure prior to starting any maintenance or repair work. (SBM-6)

BOOM ARM ASSEMBLY

- Å Inspect condition of each arm section weldment
- Å Ensure all pins are in place.
- Å Ensure all bolts, nuts and rollpins are properly installed.
- Å Check condition of bushings at boom pivot points and hydraulic cylinder tangs.
- Å Ensure each hydraulic cylinder is installed and retained correctly. Ensure the proper size pins are used to retain the cylinders in place and are secured properly. *OPS-B- 0022_D*

WARNING Never attempt to lubricate, adjust, or remove material from the Implement while it is in motion or while tractor engine is running. (SG-20)

HYDRAULIC LINE INSPECTION

- Å Check for hydraulic leaks along hoses, cylinders and fittings. **IMPORTANT**: DO NOT use your hands to check for oil leaks. Use a piece of heavy paper or cardboard to check for hydraulic oil leaks.
- Å Inspect the condition of the valve mounting.
- Å Ensure fittings are properly connected.

OPS-B- 0023_D

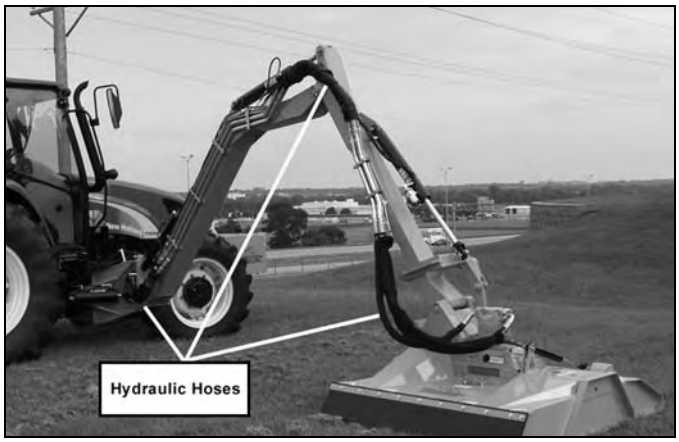

WARNING Do not operate this Equipment with hydraulic oil or fuel leaking. Oil and fuel are explosive and their presence could present a hazard. Do not check for leaks with you r hand! High-pressure oil str eams from breaks in th e line could penetrate the skin and cause tissue damage including gangrene. To check for a hose leak, SHUT the unit ENGINE OFF and remove all hydraulic pressure. Wear oil impenetrable gloves, safety glasses and use Cardboard to check for evidence of oil leaks. If you suspect a leak, REMOVE the HOSE and have it tested at a Dealer. If oil does penetrate the skin, have the injury treated immediately by a physician knowledgeable and skilled in this procedure. (SG-15)

HYDRAULIC PUMP/OIL RESERVOIR

- Å Check oil reservoir level and oil condition. (Add specific type oil if low)
- Å Change hydraulic oil filter and hydraulic oil according to maintenance schedule.
- Å Ensure there are no oil leaks and fitting are properly connected
- Å Inspect overall condition of hydraulic pump.
- Å Inspect pump drive shaft.

Check the fluid level in the Hydraulic Tank on the Tractor, and add oil if required. As the air has been forced out of the Cylinders and Hoses, it goes into the Hydraulic Tank and reduces the volume of oil. Maintain the oil level within the sight gauge located on the side of the reservoir. Never fill the tank above the sight gauge to allow for the expansion of the oil. The tank maintains pressure after the mower has been run. Stand off to one side when removing the breather cap element to prevent possible injury. *OPS-B 0024_E*

WARNING Attention: Oil Filler Cap is also the Pressure Relief Cap.

Remove cap slowly to relieve pressure before removing cap completely. Stay clear to prevent being scalded with hot oil that may spray out of the tank that is still pressurized and may cause serious injury to eyes, face, and exposed skin. (Ops-0001-MISC)

WARNING Avoid contact with hot surfaces including hydraulic oil tanks, pumps, motors, valves and hose connections. Relieve hydraulic pressure before performing maintenance or repairs. Use gloves and eye protection when servicing hot components. Contact with a hot surface or fluid can cause serious injury from burns or scalding. (SG-34)

ROTARY HEAD INSPECTION

- Å Inspect blades and blade bolts for looseness and excessive wear. Rotate to 90Áto make for checking easier. Replace damaged, worn, and missing blades as complete sets to maintain rotary balance.
- Å Ensure motor bolts and nuts are tightened to the appropriate torque.
- Å Ensure rubber deflectors are in position and not damaged. Replace worn, broken, and missing sections immediately.
- Å Ensure hydraulic lines are properly connected to the hydraulic motor. Check for hydraulic leaks along hoses and fittings. DO NOT use your hands to check for oil leaks. Use a piece of heavy paper or cardboard to check for hydraulic oil leaks.
- Å Inspect the condition of deck skid shoes and hardware. *OPS-B- 0025*

WARNING Do not put hands or feet under mower decks. Blade Contact can result in serious injury or even death. Stay away until all motion has stopped and the decks are securely blocked up. (SGM-09)

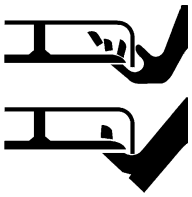

DANGER All Safety Shields, Guards and other safety devices includin g (but not limited to) - Deflectors, Steel Guards and Gearbox Shields must be used and maintained in go od working condition. All safety devices should be inspected carefully at least daily for missing or broken components. Missing, broken, or worn items must be replaced at once to reduce the possibility of injury or death from thrown objects, entanglement, or blade contact. (SSM-07)

Boom PRE-OPERATION Inspection

Mower ID#_____ Make _____

Date: _____ Shift _____

WARNING **Before conducting the inspection, make sure the tractor engine is off, all rotation has stopped and the tractor is in park with the parking brake engaged. Make sure the mower is resting on the ground or securely blocked up and all hydraulic pressure has been relieved.**

Table 1:

Item	Condition at Start of Shift	Specific Comments if not O.K.
The Operator's Manual is in the tractor		
All safety decals are in place and legible		
The mounting frame bolts are in place and tight		
The boom connection bolts & pins are tight		
There are no cracks in boom		
The hydraulic cylinders pins are tight		
The hydraulic pump hose connections are tight		
The hydraulic valve controls function properly		
There are no leaking or damaged hoses		
The hydraulic oil level is full		
There is no evidence of hydraulic leaks		
The blades are not chipped, cracked or bent		
The blade bolts are tight		
The deflectors are in place and in good condition		
The boom shields are in place and in good condition		
The skid shoes are in good condition and tight		
There are no cracks or holes in boom deck		
The hydraulic motor mounting bolts are tight		
The boom head spindle housing is tight and lubricated		

Operator's Signature:

_____

DO NOT OPERATE an UNSAFE TRACTOR or MOWER

Tractor PRE-OPERATION Inspection

Mower ID#_____ Make _____

Date: _____ Shift _____

WARNING **Before conducting the inspection, make sure the tractor engine is off, all rotation has stopped and the tractor is in park with the parking brake engaged. Make sure the mower is resting on the ground or securely blocked up and all hydraulic pressure has been relieved.**

Item	Condition at Start of Shift	Specific Comments if not O.K.
The flashing lights function properly		
The SMV Sign is clean and visible		
The tires are in good condition with proper pressure		
The wheel lug bolts are tight		
The tractor brakes are in good condition		
The steering linkage is in good condition		
There are no visible oil leaks		
The hydraulic controls function properly		
The ROPS or ROBS Cab is in good condition		
The seatbelt is in place and in good condition		
The 3-point hitch is in good condition		
The drawbar pins are securely in place		
The PTO master shield is in place		
The engine oil level is full		
The brake fluid level is full		
The power steering fluid level is full		
The fuel level is adequate		
The engine coolant fluid level is full		
The radiator is free of debris		
The air filter is in good condition		

Operator's Signature:

_____

DO NOT OPERATE an UNSAFE TRACTOR or MOWER

This Inspection Form may be freely duplicated for extra copies.

5.3 Cutting Component Inspection

Inspect blade pan and blade assembly for the following: *OPS-U-0031*

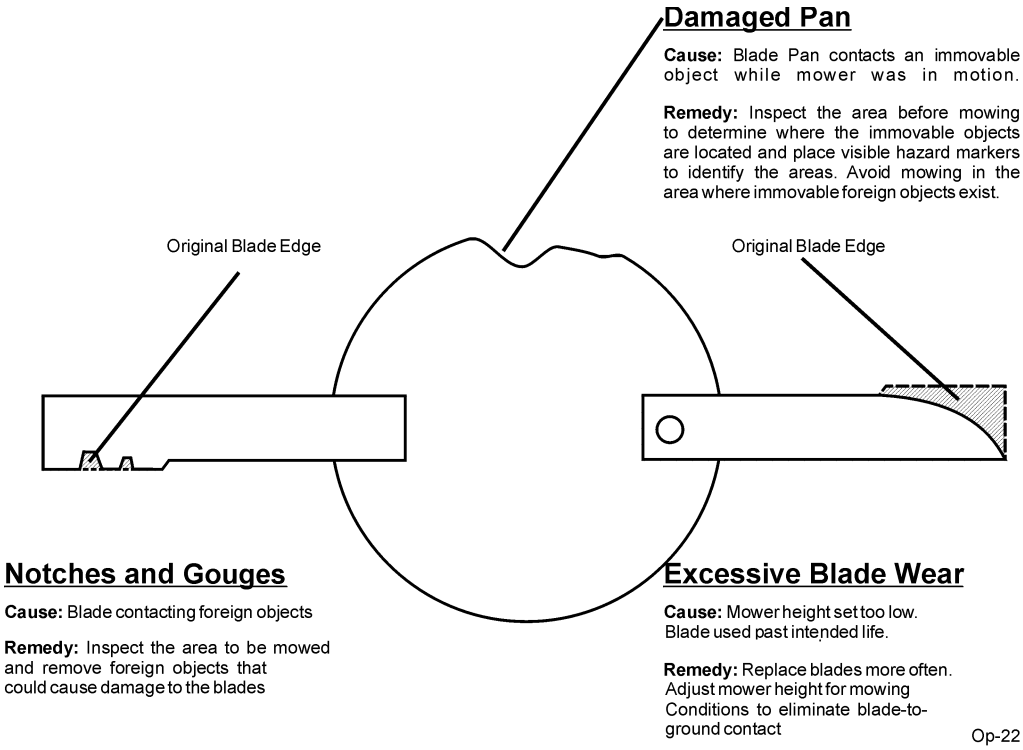

DANGER Inspect the Blades daily for abnormal wear. REPLACE BOTH BLA DES on that ca rrier IMMEDIATELY if either blade has:

- Become bent or deformed from its original shape or
- Any cracks are visible, or
- Deep gouges in the blades surface are present, or
- Gouges or chipped areas in the cutting edge are larger than 1/2 (12.7mm), or
- The material on the leading edge has been worn away by more than 1/2 (12.7mm)

Failure to replace abnormally worn blades may lead to catastrophic failure of the blades and ejection of the broken part with tremendous force which may cause serious bodily injury or death. *OPS-U-0032*

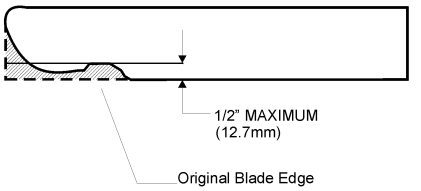

NOTE:
Replace Blades in pairs after no more than 1/2" (12.7mm) wear
Op-23

5.4 Blade Bolt Inspection

Inspect Blade Bolt Head daily for wear as followed:

Excessive Blade Bolt Wear

Cause: Blade Bolt contacts a foreign or solid object while Blade is in motion.

Remedy: Inspect the area before mowing to determine where the foreign objects are located and place visible hazard markers to identify the areas where immovable foreign objects exist, and avoid hitting the objects.

Notches and Gouges

Cause: Blade Bolt contacting foreign objects.

Remedy: Inspect area to be mowed and remove foreign objects that could cause damage to the blade bolt.

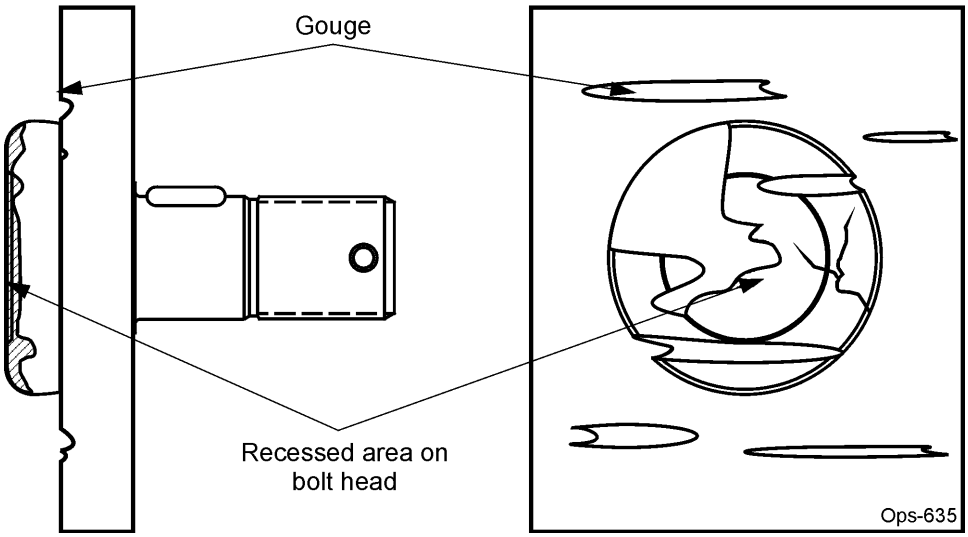

DANGER Inspect the Blade Bolt Heads daily for abnormal wear. REPLACE BOTH BLADE BOLTS on the Blades IMMEDIATELY if either blade bolts has:

Å Visible cracks or
Å If the recessed area on blade bolt is worn off or
Å If Blade Bolt has gouges or chipped areas.

Failure to replace abnormally worn blade bolts may lead to catastrophic failure of the blades and ejection of the broken part which may cause serious bodily injury or death.

Always replace Blade Bolts with new bolts whenever replacing the Blades. *OPS-U-0037*

6.JOYSTICK CONTROL

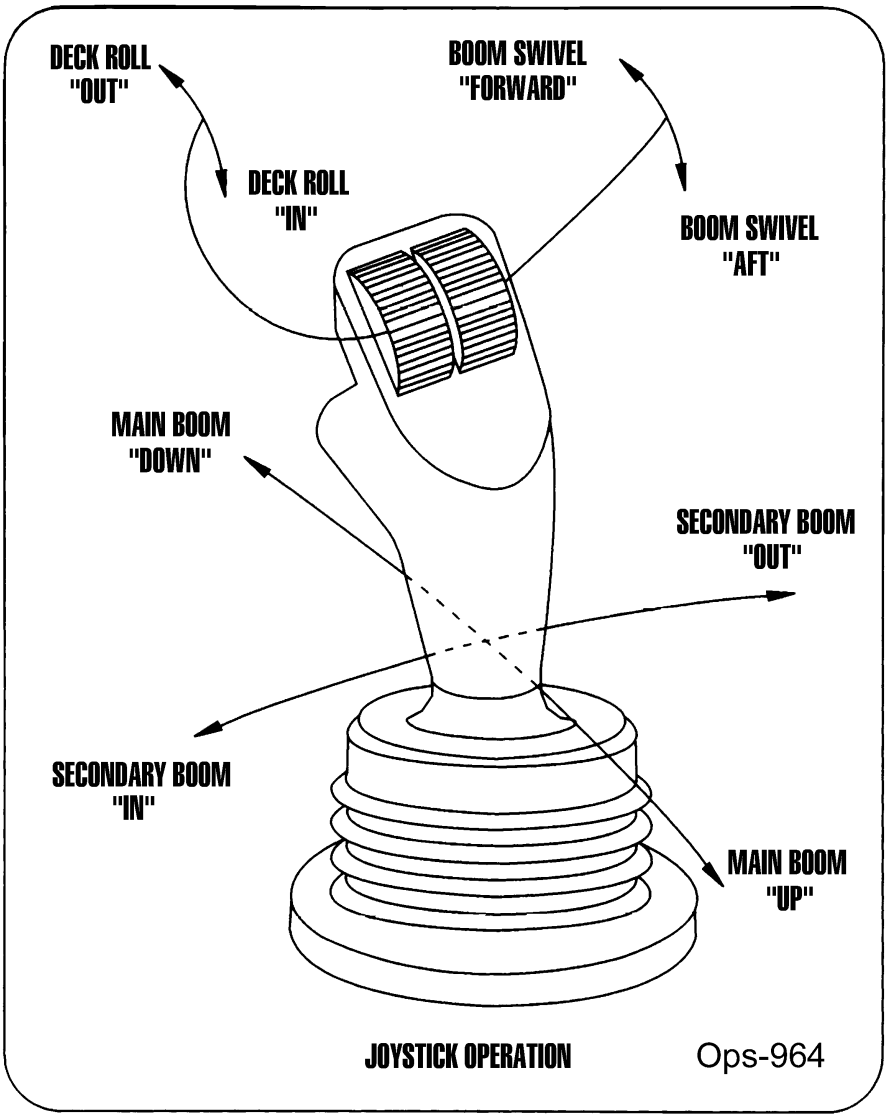

JOYSTICK FW/BACK MOVES MAIN BOOM

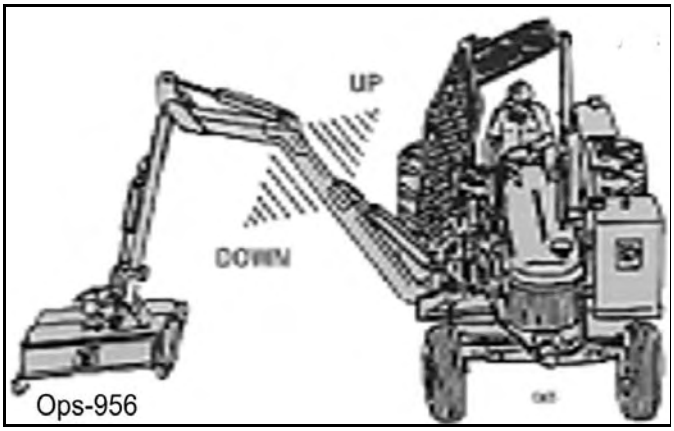

Ops-956

JOYSTICK LEFT/RIGHT MOVES SECONDARY BOOM

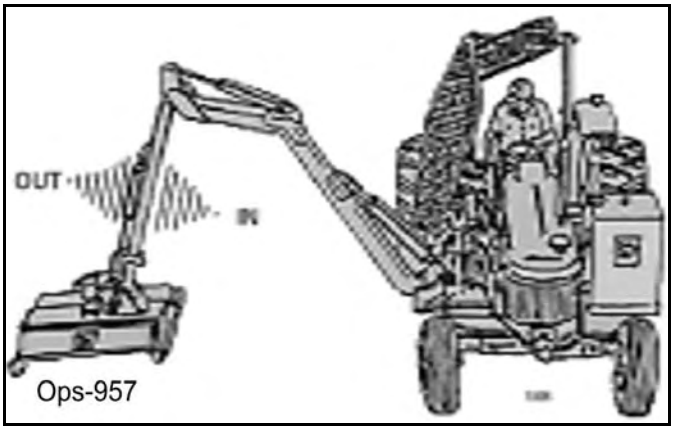

Ops-957

LEFT JOYSTICK ROLLER MOVES DECK ROLL

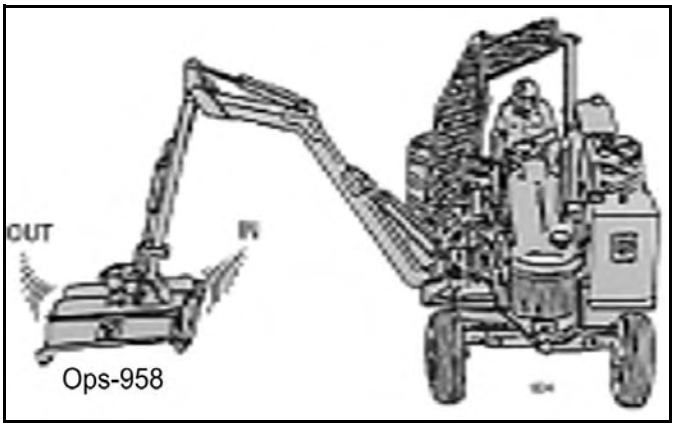

Ops-958

RIGHT JOYSTICK ROLLER MOVES BOOM SWIVEL

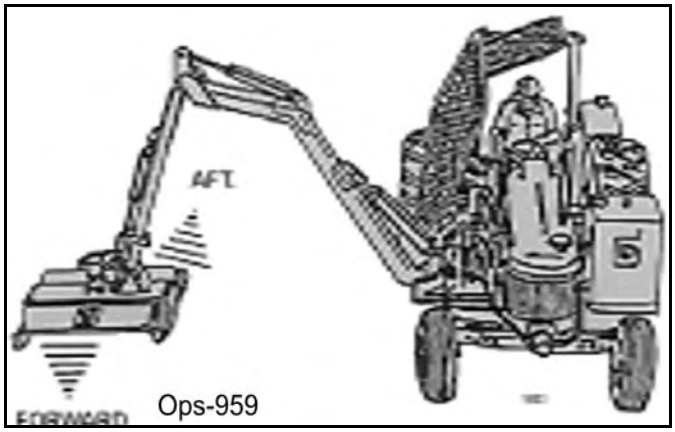

Ops-959

SHIELD SWITCH(on switch box) OPERATES SAFETY SHIELD

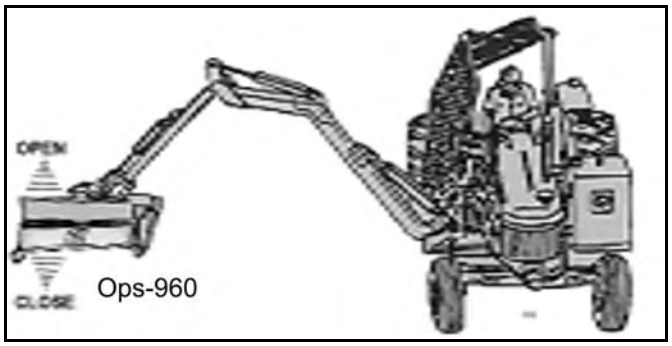

Ops-960

6.1 Switchbox

The Safety Shield lever opens and closes the shield located on the front of the cutter h ead. When moving at or near the ground, always have the shield in the closed position. When moving in t he brush or in trees above ground level the shield may be opened for easier cutting. Read and follow the warnings on the decal shown on the next page.

Ops-953

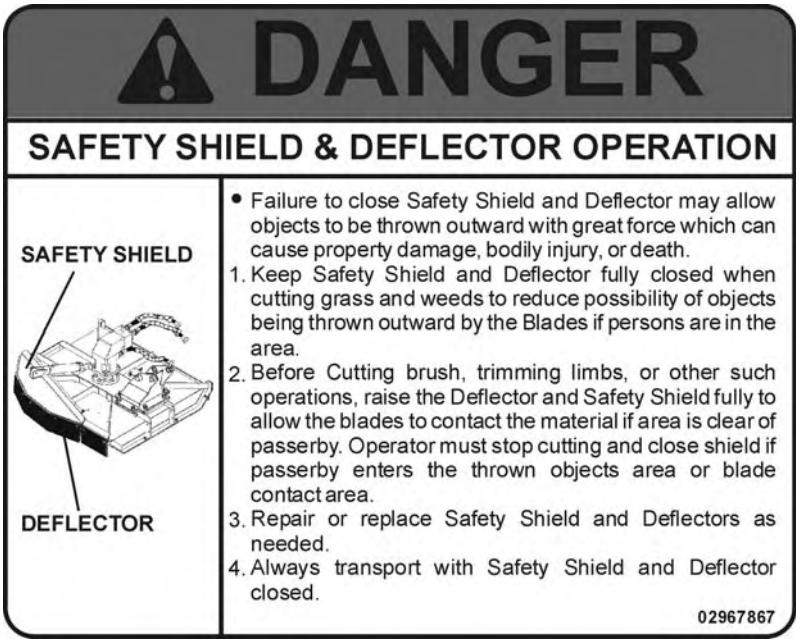

WARNING Never Leave the mower unattended while the head is in the raised position. The mower could fall causing serious injury to anyone who might inadvertently be under the mower (SBM-4)

WARNING Check to make sure mower switch is in the ñOFFò position. The unit is designed not to start if the switch is in the ñONò position. If tractor starts with switch on, turn off tractor and contact your local Tiger dealership for assistance.

Start the tractor and allow the instruments to stabilize. Without starting the mower, practice positioning the boom and deck. Remember speed and skill will be attained easier if the necessary time is spent familiarizing yourself with the machine and its operations. When you feel comfortable at controlling the position of the mower, return the mower to the travel position, and transport the mower to the desired mowing location.

If mowing for the first time with a Tiger Saber Boom Mower, we recommend choosing a ditch or area relatively flat with a minimum of sign posts, guard rails, etc. As always, you should inspect the area for other objects that can cause potential hazards.

6.2 Main Control Switch Box

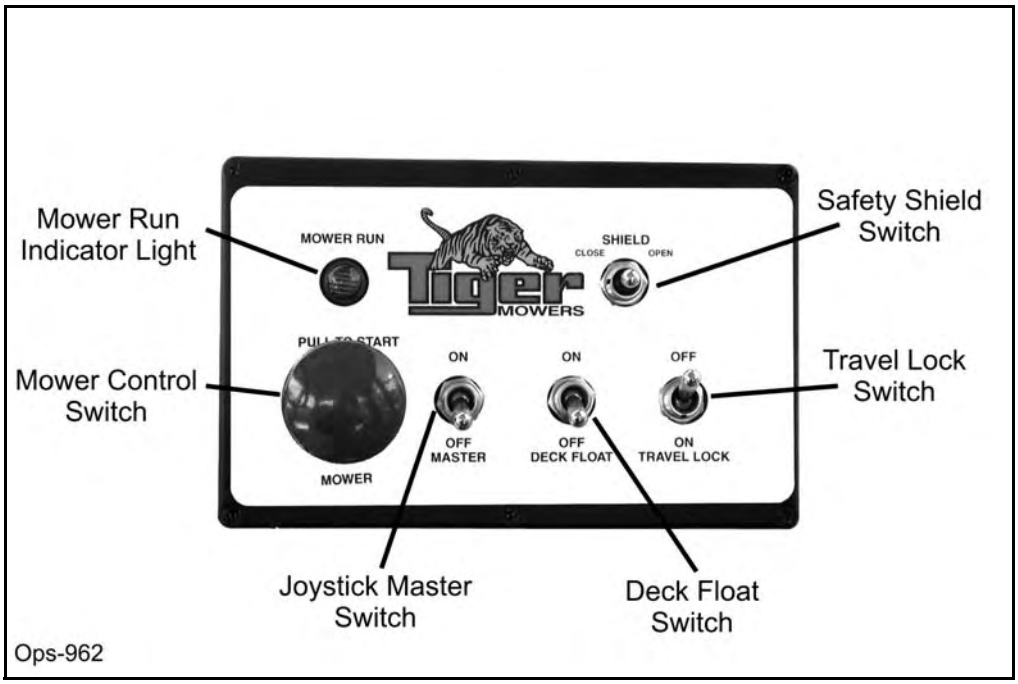

The Mower Control switch turns the mower ñONò and ñOFFò. This switch is to be in the ñOFFò position to start the tractor. If the switch is ñONò and the tractor ignition switch is turned to ñONò the red ñmower runò indicator light will com on. However, the tractor will not start again with the Mower Control switch in the ñONò position. Upon starting the tractor the ñmower runò indicator light may flash briefly, and may flash briefly again when the tractor is shut down.

WARNING If tractor starts with switch on, turn off tractor and contact your local Tiger dealership for assistance.

WARNING NOTE: **DO NOT** operate mower head while boom is in the boom rest! Red ñMower Runò light indicates mower is ñONò when tractor engine is running.

The boom functions are controlled by an electric joystick. The Joystick Master Switch enables the joyst ick control for controlling the boom motion functions. This switch is to be in the ñOFFò position when starting the tractor and when boom is stowed for transporting the machine.

CAUTION If the joystick is not operating properly, turn the master switch to the ñOFFò position. Install the manual valve handle onto valve and operate the functions individually to stow boom. After boom is stowed in rest, transport the unit to the maintenance facility and contact your Tiger dealer for assistance.

CAUTION **DO NOT** attempt to operate the valve manually for mowing operations!

Note: Pushing manual valve handles ñoutò or ñawayò from the tractor cab will bring the main boom ñupò, secondary boom ñoutò, roll deck ñoutò and swivel boom ñaftò. Pulling manual handles toward cab will let main boom ñdownò, secondary boom ñinò, roll deck ñinò, swivel boom ñforwardò, and ñcloseò the safety shield.

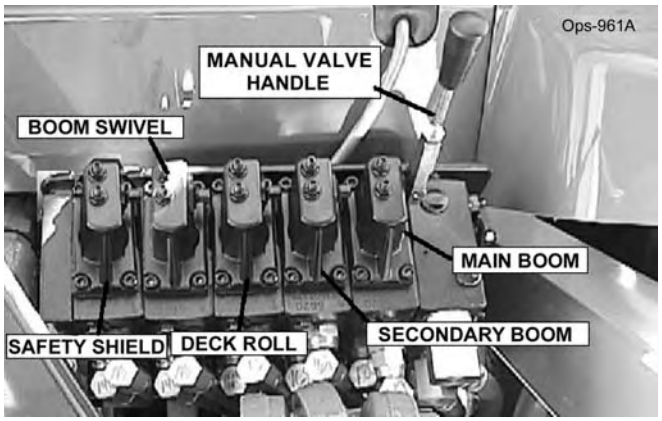

The Master Switch also provides power to the ñDeck Floatò, ñShieldò and ñTravel Lockò Functions of the mower deck.

The Deck Float function allows the ground roller of the flail mower head to follow the contour of the ground. To operate the deck float function, the Master switch must be in the ñONò position and the Travel Lock switch must be in the ñOFFò position. Lower the mower head to just touch the ground, then turn the deck float switch ñONò.

CAUTION The Deck Float is to be used ONLY when the flail mower head is on the ground. The mower head CAN NOT be controlled with the joystick when Deck Float is ñONò.

CAUTION The deck float is to be used only when mowing with a flail head, using the deck float with a rotary head may damage the mower.

The Safety Shield switch opens and closes the shield located on the front of the cutter head. When mowing at or near the ground, always have the shield in the closed position. When mowing in brush or in trees above ground level the shield may be opened for easier cutting. Read and follow the warnings on the decal shown below.

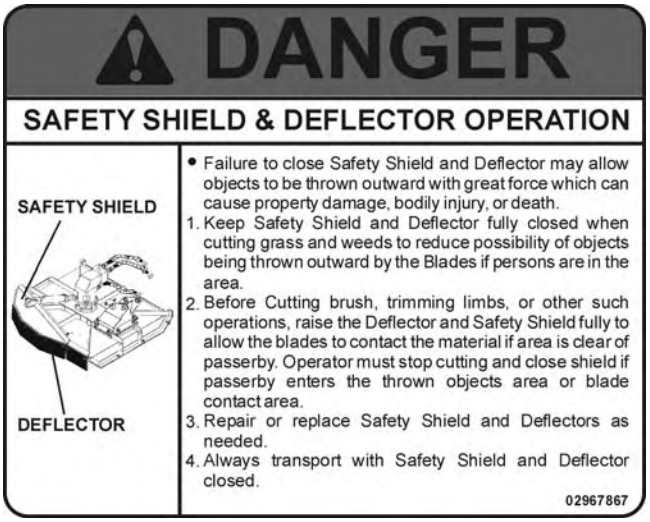

CAUTION The Travel Lock function locks the mower head in the up-right position for road travel. Prepare unit for travel by rolling deck completely out (mower deck rolled back adjacent to secondary boom.) Then place main and secondary booms in boom rest. The Travel Lock switch can now be engaged.

NOTE: The tractor ignition switch and the Master Switch must be ñONò and the Travel Lock must be ñOFFò to allow articulation of the mower deck.

7.DRIVING THE TRACTOR AND IMPLEMENT

Safe tractor transport requires the operator to possess a thorough knowledge of the model being operated and precautions to take while driving with an attached implement. Ensure the tractor has the capacity to handle the weight of the boom and the tractor operating controls are set for safe transport. To ensure safety while driving the tractor with a boom, review the following.

Read all safety instructions. Decals on the Boom warn you of particular and multiple hazards. Some decals are attached close to part of the Boom where there is a possible hazard. Read and make sure you understand the safety messages before you operate the implement. Keep all decals clean and readable. Replace lost or damaged decals, refer to safety section for more information.

Keep all person's well clear of mower since blades can throw objects with great velocity for a considerable distance! KEEP CLEAR! *OPS-B- 0005*

DANGER Never operate the Tractor or Implement until you have read and completely understand this Manual, the Tractor Operator's Manual, and each of the Safety Messages found in the Manual or on the Tractor and Implement. Learn how to stop the tractor engine suddenly in an emergency. Never allow inexperienced or untrained personnel to operate the Tractor or Implement without supervision. Make sure the operator has fully read and understood the manuals prior to operation. (SG-4)

WARNING Always maintain the safety signs in good readable condition. If the safety signs are missing, damaged, or unreadable, obtain and install replacement safety signs immediately. (SG-5)

WARNING Transport only at speeds where you can maintain control of the equipment. Serious accidents and injuries can result from operating this equipment at high speeds. Understand the Tractor and Implement and how it handles before transporting on streets and highways. Make sure the Tractor steering and brakes are in good condition and operate properly.

Before transporting the Tractor and Implement, determine the proper transport speeds for you and the equipment. Make sure you abide by the following rules:

Test the tractor at a slow speed and increase the speed slowly. Apply the Brakes smoothly to determine the stopping characteristics of the Tractor and Implement. As you increase the speed of the Tractor the stopping distance increases. Deter mine the maximum transport speed not to exceed 20 mph (30 kph) for transporting this equipment.

Test the equipment at a slow speed in turns. Increase the speed through the turn only after you determine that the equipment can be operated at a higher speed. Use extreme care and reduce your speed when turning sharply to prevent the tractor and implement from turning over. Determine the maximum turning speed for you and this equipment before operating on roads or uneven ground.

Only transport the Tractor and Implement at the speeds which allow you to properly control the equipment.

Be aware of the operating conditions. Do not operate the Tractor with weak or faulty brakes or worn tires. When operating down a hill or on wet or rain slick roads, the braking distance increases: use extreme care and reduce your speed. When operating in traffic always use the Tractorôs flashing warning lights and reduce your speed. Be aware of traffic around you and watch out for the other guy. (SG-19)

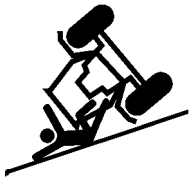

7.1 Starting the Tractor

The procedure to start the tractor is model specific. Refer to the tractor operatorôs manual for starting procedures for your particular tractor. Consult an authorized dealer if the starting procedure is unclear. Ensure the 3-point control lever is in the lowered position and the PTO is disengaged before starting the tractor. *OPS-U-0033*

7.2 Brake and Differential Lock Setting

Make sure the tractor brakes are in good operating condition. Tractor brakes can be set to operate independently allowing single rear wheel braking action or locked together to provide simultaneous rear wheel braking. FOR MOST DRIVING AND OPERATING CONDITIONS, THE BRAKE PEDALS SHOULD BE LOCKED TOGETHER TO PROVIDE THE MOST EFFECTIVE BRAKING ACTION.

Always disengage the tractor differential lock when turning. When engaged the differential lock will prevent or limit the tractor from turning. During normal cutting conditions, locking the differential provides no benefit and should not be used.

OPS-U- 0013

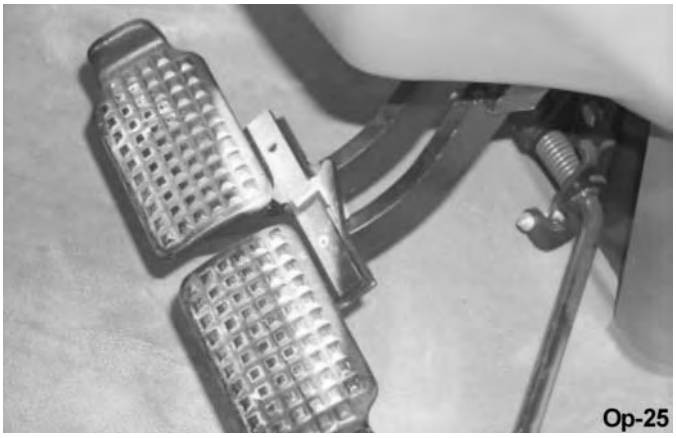

DANGER

BEFORE leaving the tractor seat, always set the parking brake and/or set the tractor transmission in parking gear, disengage the PTO, stop the engine, remove the key, and wait for all moving parts to stop. Place the tractor shift lever into a low range or parking gear to prevent the tractor from rolling. Never dismount a Tractor that is moving or while the engine is running. Operate the Tractor controls from the tractor seat only. (SG-9)

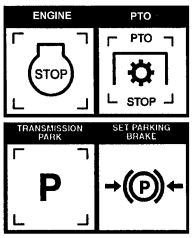

WARNING

Never Leave the mower unattended while the head is in the raised position. The mower could fall causing serious injury to anyone who might inadvertently be under the mower (SBM-4)

7.3 Driving the Tractor and Boom

Start off driving at a slow speed and gradually increase your speed while maintaining complete control of the tractor. Never operate the tractor at speeds that cannot be safely handled or which will prevent the operator from stopping quickly during an emergency. If the power steering or engine ceases operating, stop the tractor immediately as the tractor will be difficult to control.

Perform turns with the tractor and mower at slow speeds to deter mine how the tractor with and attached implement handles a turn. Determine the safe speed to maintain proper control of the tractor when making turns. When turning with the implement the overall working length and width of the unit is increased. Allow additional clearance for the unit when turning or when passing large obstructions.

To avoid overturns, drive the tractor with care and at safe spee ds, especially when operating over rough ground, crossing ditches or slopes, and turning corners. Use extreme caution when operating on steep slopes. Keep the tractor in a low gear when going downhill. DO NOT coast or free-wheel downhill.

OPS-B- 0006_SBR

8.OPERATING THE BOOM UNIT AND ATTACHED HEAD

THE OPERATOR MUST COMPLETELY UNDERSTAND HOW TO OPERATE THE TRA CTOR AND MOWER AND ALL CONTROLS BEFORE ATTEMPTING TO MOW. The operator must read and understand the Safety and Operation Sections of this manual and the tractor operator's manuals. These manuals must be read and explained to any operator who cannot read. Never allow someone to operate the unit without complete operating instructions.

To ensure safety to the operator, bystanders, and equipment and before starting any mowing operation. The operator must become familiar with the area to be mowed, and any obstacles and hazards contained within. Special attention should be paid to foreign debris, overhead obstructions, rough terrain, steep slopes, passersby and animals in the area.

Only operate the mower head from the tractor operator's seat with the seatbelt securely fastened. Only operate a boom and equipped head on cabbed tractor that is equipped with a polycarbonate safety-protected right side window or a non cabbed tractor equipped with a ROPS and operator safety screen.

Avoid operating in the reverse direction when possible. In situations where the boom and mower must be backed to access areas to be cut, make sure there are no persons or other foreign debris behind the tractor. When backing, operate the tractor at a much reduced ground speed to ensure complete control of the unit is maintained. *OPS-B- 0007*

⚠WARNING Do not mow with two machines in the same area except with Cab tractors with the windows closed. (SGM-11)

⚠WARNING Mow only in conditions where you have clear visibility in daylight or with adequate artificial lighting. Never mow in darkness or foggy conditions where you cannot clearly see at least 300 feet (90 m) in front and to the sides of the tractor and mower. Make sure that you can clearly see and identify passersby, steep slopes, ditches, drop-offs, overhead obstructions, power lines, debris and foreign objects. If you are unable to clearly see these type of items discontinue mowing. (SGM-01)

⚠WARNING Avoid mowing in reverse direction when possible. Check to make sure there are no persons behind the mower and use extreme care when mowing in reverse. Mow only at a slow ground speed where you can safely operate and control the tractor and mower. Never mow an area that you have not inspected and removed debris or foreign material. (SGM-08)

⚠WARNING Never operate the mower head tilted down where the operator can see the blades of the mower. The blade could throw an object toward the operator causing serious injury or death. Never operate the mower without an Operator Protective Structure. Always wear safety glasses and a hard hat. (Ops-0005-MISC)

8.1 Foreign Debris Hazards/Overhead Obstructions

An area to be cut must first be inspected for objects that could be thrown or that could damage the machine. Walk through the area looking for fences, boulders, rocks, culverts, stumps or metal objects. Mark the inspected area with flags. If the area is dense and cannot be walked thoroughly it may be necessary to inspect a smaller area as well as possible, then trim away the part that has been inspected and can safely be removed. Walk each new area again and repeat the inspection before cutting more away. Repeat as often as necessary until the area is cleared. It can be damaging and/or dangerous to work the cutter in an area that has not been visually inspected.

Place DANGER signs at least 300 feet beyond the perimeter of the area to be worked, not just 300 feet from where the machine started operating! It is convenient in many cases to work in 300 foot sections. Move the first Danger sign to the beginning of the freshly cleared area, place it, then take the first cutting area flag up to the end of the freshly cleared area 300 feet away. Walk and inspect the next 300 feet and place the second cutting area flag. Pick up the second DANGER sign, and take it a further 300 feet along the road or trail. Note that in many cases the DANGER area will extend in front of and behind the machine as well as along each side. Post signs accordingly. *OPS-B- 0008*

WARNING Extreme care should be taken when operating near loose objects such as gravel, rocks, wire, and other debris. Inspect the area before mowing. Foreign objects should be removed from the site to prevent machine damage and/or bodily injury or even death. Any objects that cannot be removed must be clearly marked and carefully avoided by the operator. Stop mowing immediately if blades strike a foreign object. Repair all damage and make certain rotor or blade carrier is balanced before resuming mowing. (SGM-05)

WARNING Many varied objects, such as wire, cable, rope, or chains, can become entangled in the operating parts of the mower head. These items could then swing outside the housing at greater velocities than the blades. Such a situation is extremely hazardous and could result in serious injury or even death. Inspect the cutting area for such objects before mowing. Remove any like object from the site. Never allow the cutting blades to contact such items. (SGM-06)

WARNING Mow at the speed that you can safely operate and control the tractor and mower. The correct mowing speed depends on terrain condition and grass type, density, and height of cut. Normal ground speed range is from 2 to 5 mph(3-8 kph). Use slow mowing speeds when operating on or near steep slopes, ditches, drop-offs, overhead obstructions, power lines, or when debris and foreign objects are to be avoided. (SGM-07)

DANGER BEFORE leaving the tractor seat, always set the parking brake and/or set the tractor transmission in parking gear, disengage the PTO, stop the engine, remove the key, and wait for all moving parts to stop. Place the tractor shift lever into a low range or parking gear to prevent the tractor from rolling. Never dismount a Tractor that is moving or while the engine is running. Operate the Tractor controls from the tractor seat only. (SG-9)

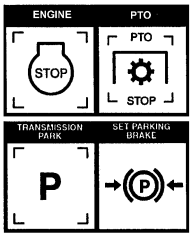

8.2 Operating Speed and Ground Speed

Ground speed for mowing will depend upon the height, type, and density of vegetation to be cut. Do Not exceed 5 MPH while operating. Operate the mower at its full rated RPM to maintain blade speed for a clean cut. Refer to the tractor operator's manual or the tractor instrument panel for the engine speed and gear to provide the desired ground speed. Make sure that the mower is operating at its full rated speed before entering the vegetation to be cut. Always start and stop cutting blades with engine near idle.

Ground speed is achieved by transmission gear selection and not by the engine operating speed. The operator may be required to experiment with several gear range combinations to determine the best gear and range which provides the most ideal performance from the implement and most efficient tractor operation. As the severity of cutting conditions increase, the ground speed should be decreased. *OPS-B- 0009_SBR*

DANGER There are obvious and hidden potential hazards in the operation of this Mower. REMEMBER! This machine is often operated in heavy brush and in heavy weeds. The Blades of this Mower can throw objects if shields are not properly installed and maintained. Serious injury or even death may occur unless care is taken to insure the safety of the operator, bystanders, or passersby in the area. Do not operate this machine with anyone in the immediate area. Stop mowing if anyone is within 300 feet of mower. (SGM-02)

WARNING Mow at the speed that you can safely operate and control the tractor and mower. The correct mowing speed depends on terrain condition and grass type, density, and height of cut. Normal ground speed range is from 2 to 5 mph(3-8 kph). Use slow mowing speeds when operating on or near steep slopes, ditches, drop-offs, overhead obstructions, power lines, or when debris and foreign objects are to be avoided. (SGM-07)

8.3 Mower Operation

The rotating parts in this machine have been designed and tested for rugged use. However, they could fail upon impact with heavy solid objects-such as steel guard rails, concrete abutments,etc., causing them to be thrown at a very high velocity. Never allow cutter head to contact such objects. Inspecting the cutting area for such objects and removing them prior to mowing can help eliminate these potiential hazards.

Once on location, lower the mower deck slightly above the material to be cut, so the mower does not have to start under a load. With the tractor at an idle, engage mower. Bring tractor R.P.M. up to 1900-2200 R.P.M. and **slowly** lower deck to ground level.

A flail mower deck should be carried so that the part of the deck weight is carried by the boom and part carried by the ground roller, when moving on the ground. When the flail mower is carried this way, the ground roller follows the contour of the ground more easily during mowing operations.

The rotary mower deck should always be carried rather than dragged on the skid shoes when mowing on the ground. Dragging the rotary mower deck increases the side loads on the boom, decreases the horsepower available to the cutter head, and reduces the ability of the accumulator the carry part of the weight of the boom during mowing operations.

WARNING When rotating parts are in motion, serious injury may occur if caution is not used or danger is not recognized. Never allow bystanders within **300 feet** of the machine when in operation. Extreme care should be taken when operating near loose objects-such as gravel, rocks, and debris. These conditions should be avoided.

8.4 50ò and 60ò Boom Rotary Brush Mowers

The 50ò and 60ò boom rotary brush mower was designed for cutting brush and foliage up to 6 inches in diameter or multiple branches that have a total cross section area equivalent to one 6 inch branch.

During mower operation, the hand throttle must be used to maintain engine speed at 1900-2200 R.P.M. This prevents radical changes in mower spindles speed, reducing the possibility of cutter assembly damage.

The horizontal positioning action of the boom is designed to position the cutting head and provide a limited pressure relief when excessive pressure is applied to the boom. Do not force the cutting head into heavy branches or stumps. Damage to the unit may result.

CAUTION When using the rotary cutting head for trimming trees and shrubs, let the mower saw into them. Do not lower the mower head down directly into a tree or stump. The mower blades are designed to cut with the end, and misuse can cause damage to the blade and a hazardous situation for the operator.

CAUTION Powering the boom down, forcing mower deck onto ground may damage mower deck and itôs attachment to the boom, creating a potentially hazardous situation.

To ensure a clean cut, engine speed should be maintained at approximately 1900-2200 R.P.M. If the tractor slows to less than 1800 R.P.M., shift to the next lower gear. DO NOT ride the clutch, this will cause premature clutch failure. **The engine should not be operated at any time at more than 2400 R.P.M. on the tractor tachometer.**

For cutting brush it is usually best to stop the tractor and swivel the boom and mower into foilage. The horizontal positioning action of the boom is designed to position the cutting head and provide a limited pressure relief when excessive pressure is applied to the boom.

CAUTION **DO NOT** use excessive force when positioning cutting head into heavy branches or stumps. Damage to the unit may result. It is best to let the cutter head ñeat awayò slowly at heavy cutting jobs.

CAUTION If foliage falls on top of mower deck causing tractor to become unstable, move the boom ñForwardò and ñOutò to relieve tipping of the tractor. Lower mower deck to ground and shut down unit. After all motion stops, remove foliage from mower deck.

The mower will operate more efficiently in tougher conditions and with less power if the knives are kept sharp. If the mower begins to vibrate, stop the tractor, check for wire wrapped in the spindle or damaged knives. When replacing knives, replace all knives with new knives to ensure proper balance so the mower will not vibrate. Severe vibration will result, if knives with unequal wear are used.

Begin a pass at the top side of the trees and work down with each consecutive pass. When cutting trees and shrubs, use a lower speed to allow the knives time to cut as well as mulch the foliage.

WARNING If bystanders approach within 300 feet while mower is in operation turn mower switch ñOFFò immediately! After shutdown, never leave the tractor or allow bystanders to approach within **300 FEET** of the unit until all motion stops completely.

If cutter shaft jams and stops, turn mower switch to ñOFFò, and swivel boom ñAFTò. Normally this action will clear the cutter head. If not, roll mower deck until adjacent to the secondary boom, then lower boom to rest mower deck on ground. Shut off the tractor, set parking break, allow all motion to cease. At that point it is safe to leave the tractor and clear the cutter heads manually.

Begin each pass at the top side of the trees and work down with each consecutive pass. Use a low speed to allow the cutting blades time to mulch as well as cut the foliage. When the initial pass has been made,

disengage the mower, and return boom to a safe travel position. Return to starting point and make next pass, etc.

After the first day of operation, all bolts should be checked and tightened securely. This should be done periodically to ensure the bolts do not become loose and cause damage to the tractor or mower, or injury to the operator.

When cutting trees and brush approach material to be cut with the head perpendicular to material. The cutting edge of the blades should be the only elements in contact with material. The blade bar should not contact with material. The mower head and blades should be moved perpendicularly into the material rather lowering the mower head on top of material. If the blade bar edges are gouged or rounded from wear, the mower head is being used incorrectly in an abusive manner. The blade bar is not intended to cut material or to be a wear item like the blades. Do Not allow the blades or blade bar to contact the ground, rocks or solid objects. Contact with the ground can result in rocks and solid objects being thrown out from under the mower head which can cause serious injuries to the operator and bystanders. This type of operation can lead to bent or broken blade bars, broken blade bolts and broken blade bar assembly bolts which can be dangerous to the operator and bystanders.

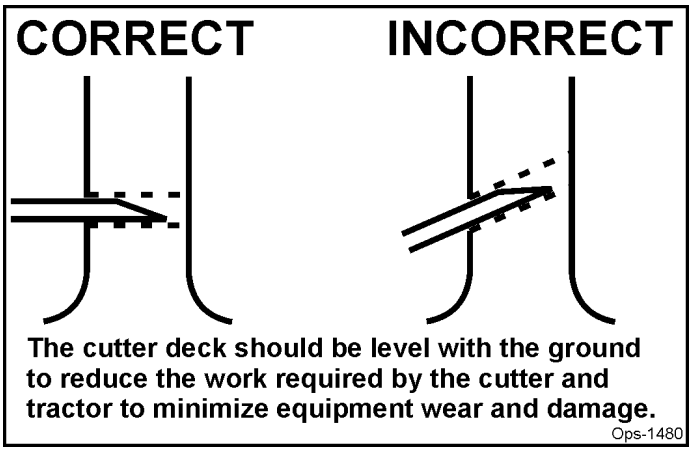

(OPS-R-220

8.5 60ò Boom Rotary Grass Mower

The 60ò boom rotary grass mower was designed for cutting grass only. The cutter speed must be maintained for proper cutting. To insure that the cutter is rotating at maximum speed, run tractor at full throttle during mowing operations. If cutter assembly slows to the point that the knives are folding back, move the mower head away from the foliage and allow the cutter shaft to regain full speed.

During mower operation, the hand throttle must be used to maintain engine speed at 1900-2200 R.P.M. This prevents radical changes in mower spindles speed, reducing the possibility of cutter assembly damage.

The horizontal positioning action of the boom is designed to position the cutting head and provide a limited pressure relief when excessive pressure is applied to the boom. Do not force the cutting head into heavy grass. Damage to the unit may result.

⚠ CAUTION

When using the rotary cutting head for cutting heavy grass, let the mower saw into it. Do not lower the mower head down directly into the heavy grass. The mower blades are designed to cut with the end, and misuse can cause damage to the blades and a hazardous situation for the operator.

⚠ CAUTION

Powering the boom down, forcing mower deck onto ground may damage mower deck and it's attachment to the boom, creating a potentially hazardous situation.

To ensure a clean cut, engine speed should be maintained at approximately 1900-2200 R.P.M. If the tractor slows to less than 1800 R.P.M., shift to the next lower gear. DO NOT ride the clutch, this will cause premature clutch failure. **The engine should not be operated at any time at more than 2400 R.P.M. on the tractor tachometer.**

8.6 50ò Boom Flail

The 50ò boom flail mower was designed for cutting brush and foliage up to 2 inches in diameter or multiple branches that have a total cross section area equivalent to one 2 inch branch. Cutting multiple limbs at the same time may overload the mower causing it to slow down or stall completely. Regardless of the size of material being cut, the cutter shaft speed must be maintained. To ensure that the cutter shaft is running at maximum speed, run the tractor at full throttle during mowing operations. If the cutter shaft slows to the point that the knives are folding back, move the mower head away from the foliage and allow the cutter shaft to regain full speed.

WARNING Operating the mower in a manner that allows the knives to continually fold back or allowing knive lugs to contact foliage will cause permanent damage to the cutter shaft drum, knives, and knife attachment parts.

WARNING The 50ò boom flail cutter shaft is designed for standard rotation (same rotation as the tractor wheels during forward travel). **Never operate the cutter shaft in reverse rotation.** Operating this mower in reverse rotation may cause objects to be thrown out the front of the mower head.

WARNING The 50ò boom flail equipped with free swinging brush knives is intended for brush cutting only. Cutting grass is not recommended.

WARNING Do not allow knives to cut down to the ground. Position ground roller to maintain knife arc at a minimum of 2 inches above the ground. Knife contact or lug contact with ground will cause permanent damage to cutter shaft, knives, and knife attachment parts.

8.7 63ò Boom Flail

The 63ò boom flail mower was designed for cutting grass. The cutter shaft speed must be maintained for proper cutting. To insure that the cutter shaft is rotating at maximum speed, run tractor at full throttle during mowing operations. If cutter shaft slows to the point that the knives are folding back against the cutter shaft, move the mower head away from the foliage and allow the cutter shaft to regain full speed.

DANGER The rotating parts of this machine have been designed and tested for rugged use. However, the blades could fail upon impact with heavy, solid objects such as metal guard rails and concrete structures. Such impact could cause the broken objects to be thrown outward at very high velocities. To reduce the possibility of property damage, serious injury, or even death, never allow the cutting blades to contact such obstacles. (SGM-4)

DANGER All Safety Shields, Guards and Safety devices including (but not limited to) - the Deflectors, Chain Guards, Steel Guards, Gearbox Shields, PTO integral shields, and Retractable Door Shields should be used and maintained in good working condition. All safety devices should be inspected carefully at least daily for missing or broken components. Missing, broken, or worn items must be replaced at once to reduce the possibility of injury or death from thrown objects, entanglement, or blade contact. (SGM-3)

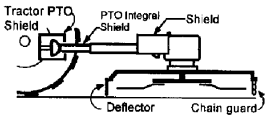

8.8 Saber Flail

The Saber flail mower was designed for cutting brush and foliage up to 4 inches in diameter or multiple branches that have a total cross section area equivalent to one 4 inch branch. Cutting multiple limbs at the same time may overload the mower causing it to slow down or stall completely. Regardless of the size of material being cut, the cutter shaft speed must be maintained. To ensure that the cutter shaft slows to the point that the knives are folding back against the cutter shaft move the mower had away from the foliage and allow the cutter shaft to regain full speed.

WARNING Operating the mower in a manner that allows the cutting knives to contact the drum will cause permanent damage to the cutter shaft drum, knives, and knife arrachments.

WARNING The Saber flail cutter shaft is designed for standard rotation (same rotation) as the tractor wheels during forward travel). Never operate the cutter shaft in the reverse rotation. Operating this mower in reverse rotation may cause objects to be thrown out the front of the mower head.

8.9 Saber Rotary

The Saber Rotary mower was designed for cutting brush and foliage up to 8 inches in diameter or multiple branches that have a total cross section area equivalent to on 8 inch branch. Cutting multiple limbs at the same time may overload the mower causing it to slow down or stall completely. Regardless of the size of material being cut, the speed of the cutter head must be maintained. To ensure that the cutter head is running at maximum speed, run the tractor at full throttle during mowing operations. If the cutter head slows to the point that the knives are folding back, move the mower head away from the foliage and allow the cutter head to regain full speed.

WARNING Operating the mower in a manner that allows the cutting knives to continually fold back will cause permanent damage to the knives, rotary disk, and spindle assembly.

WARNING The Saber Rotary cutter head is designed for clockwise rotation (clockwise as seen from the top of the cutter head). Never operate the cutter head in the counterclockwise rotation. Operating this mower in counterwise rotation may cause objects to be thrown towards the tractor.

8.10 Shutting Down the Attached Head- For Standard Equipment

To shut down attached mower head, first bring the tractor to a complete stop. Decrease engine RPM to idle then disengage cutterhead. The mower head will come to a complete stop within a suitable amount of time. Do not engage or disengage the cutterheads at a high RPM unless there is an emergency situation.

Park the tractor on a level surface, place the transmission in park or neutral and apply the parking brake, shut down the engine, remove the key, and wait for all motion to come to a complete stop before exiting the tractor. *OPS-B- 0011_D*

DANGER BEFORE leaving the tractor seat, always set the parking brake and/or set the tractor transmission in parking gear, disengage the PTO, stop the engine, remove the key, and wait for all moving parts to stop. Place the tractor shift lever into a low range or parking gear to prevent the tractor from rolling. Never dismount a Tractor that is moving or while the engine is running. Operate the Tractor controls from the tractor seat only. (SG-9)

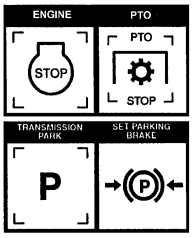

DANGER Never allow children to play on or around Tractor or Implement. Children can slip or fall off the Equipment and be injured or killed. Children can cause the Implement to shift or fall crushing themselves or others. (SG-25)

WARNING Perform service, repairs and lubrication according to the maintenance section. Ensure the unit is properly lubricated as specified in the lubrication schedule and all bolts and nuts are properly torqued. Failure to properly service, repair and maintain this Implement in good operating condition could cause component failure and possible serious injury or even death. (SG-35)

9.TRANSPORTING THE TRACTOR AND IMPLEMENT

Inherent hazards of operating the tr actor and implement and the pos sibility of accidents are not lef t behind when you finish working in an area. Therefore, the operator must employ good judgement and safe operation practices when transporting the tractor and implement between locations. By using good judgement and following safe trans port procedures, the poss ibility of accidents while moving between locations can be substantially minimized. *OPS-U- 0017*

9.1 Unstowing the Boom

To un-stow the boom from the boom rest, proceed as follows. Extend secondary boom ñOUTò and move main boom ñUPò off of horizontal support. Swivel boom ñFORWARDò perpendicular to tractor and switch travel lock to ñOFFò (ONLY FOR DANFOSS SWITCH). The head and booms are now ready for full operation.

9.2 Transporting under the Units own power

When transporting between job sites, the following procedure should be followed:

- Å Idle the tractor engine and bring it down to speed.
- Å Shut off the power to the cutting head and allow all motion to come to a complete stop.
- Å Roll the mower deck all the way back until it is adjacent to the secondary boom.
- Å Extend the secondary boom out to clear the boom rest.
- Å Swivel the boom until close to the boom rest, then position the main boom just above the horizontal boom support of the boom rest.
- Å Slowly and carefully swivel the boom ñAFTò until the main boom contacts the vertical pad.
- Å Lower the main boom until it contacts the upper pad, now the secondary boom can be lowered to contact the pad on the boom rest.
- Å Place the ñTravel Lockò switch on the main control switch box to the ñONò position.
- Å Lastly, turn the joystick master control switch
- Å to the ñOFFò position. The unit is now ready for self transportation.

9.3 Transporting on Public Roadways

Extreme caution should be used when transporting the tractor and mower on public roadways. The tractor must be equipped with all required safety warning features including a SMV emblem and flashing warning lights to alert drivers of the tractorôs presence. Remember that roadways are primarily designed for automotive drivers and most drivers will not be looking for you, therefore, you must look out for them. Check your sideview mirrors frequently and remember that vehicles will approach quickly because of the tractorôs slower speed. Be extremely cautious when the piece of equipment that you are towing, is wider than the tractor tire width and/or extends beyond your lane of the road.

The SMV (Slow-Moving Vehicle) emblem is universal symbol used to alert drivers of the presence of equipment traveling on roadways at a slow speed. SMV signs are a triangular bright orange with reflective red trim for both easy day and night visibility. Make sure the SMV sign is clean and visible from the rear of the unit before transporting the tractor and implement on a public roadway. Replace the SMV emblem if faded, damaged, or no longer reflective. *OPS-U- 0020*

Make sure that all tractor flashing warning lights, headlights, and brake/taillights are functioning properly before proceeding onto public roads. While newer model tractors have plenty of lighting to provide warning signals and operating lighting, most older models where only equipped with operating lights. Consult an authorized tractor dealer for lighting kits and modifications available to upgrade the lighting on older tractor models. *OPS-B-0015*

When operating on public roads, have consideration for other road users. Pull to the side of the road occasionally to allow all following traffic to pass. Do not exceed the legal speed limit set in your state or municipality for agricultural tractors. Always stay alert when transporting the tractor and mower on public roads. Especially in busy cities, the boom extends to right farther then the tractors width, so be careful there are no bystanders, poles, large obstructions or any vehicles that may be in path of the mower head or boom. Use caution and reduce speed if other vehicles or pedestrians are in the area. *OPS-B- 0016*

DANGER When transporting Boom Mower on a truck or trailer, the height or width may exceed legal limits when the boom is in the transport position. Contact with side or overhead structures or power lines can cause property damage or serious injury or death. If necessary lower boom to reduce height and/or remove mowing head to reduce width to the legal limits. (SBM-8)

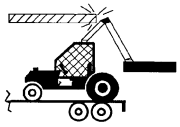

DANGER Never allow children or other persons to ride on the Tractor or Implement. Falling off can result in serious injury or death. (SG-10)

WARNING Make certain that the ñSlow Moving Vehicleò (SMV) sign is installed in such a way as to be clearly visible and legible. When transporting the Equipment use the Tractor flashing warning lights and follow all local traffic regulations. (SG-6)

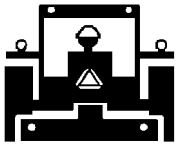

Reduce speed before turning or applying the brakes. Ensure that both brake pedals are locked together when operating on public roads. *OPS-U- 0023*

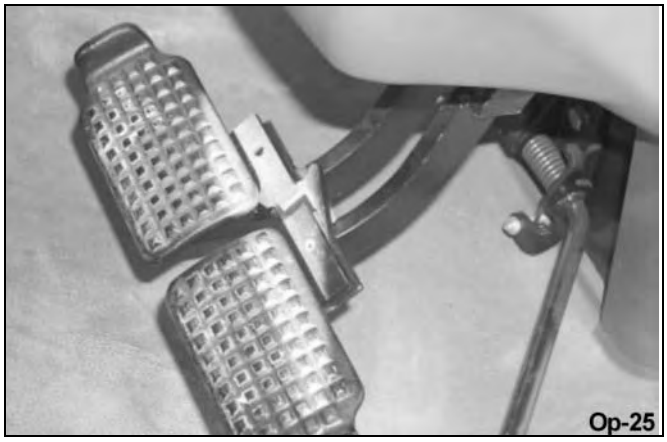

9.4 Transporting Unit by Flatbed Trailer

Park flatbed on level area. Drive tractor onto center of flatbed to avoid uneven distribution of weight and staying within local width restrictions. If boom is over local height restrictions, you will need to extend booms outward enough to clear front of tractor when boom is pivoted forward. Pivot mower deck into a horizontal position, and lower the boom until deck is slightly above trailer bed. Remove cylinder pin from outer end of the boom swivel cylinder.

⚠ CAUTION If trailer is not perfectly level, the boom will tend to swing towards the lower side. Have other personnel ready to control its swinging motion when cylinder pin is removed.

Retract swivel cylinder and secure to main frame. Pivot boom forward to the center of flat bed. Lower deck ontothe trailer bed, and shut off the tractor. The tractor and the mower head should now be chained down securely to the trailer bed.

⚠ CAUTION If any part of this operating section, or any other section of this manual is not completely understood, contact your Tiger dealer or the address on the cover of this manual for assistance!

9.5 Hauling the Tractor and Implement

Before transporting a loaded tractor and implement, measure the height and width dimensions and gross weight of the complete loaded unit. Ensure that the load will be in compliance with the legal limits set for the areas that will be traveled through. *OPS-U- 0024*

Use adequately sized and rated trailers and equipment to transport the tr actor and implement. Consult an authorized dealer to determine the proper equipment required. Using adequately sized chains, heavy duty straps, cables and/or binders, securely tie down both the front and rear of the tractor utilizing the proper tie down locations as specified by the tractor manufacturer. *OPS-U- 0025*

Arrange the chains so that when tightened, the chains are pulling dow nward and against themselves. Carefully tighten the securing chains or other fasteners using boomers or binders to apply maximum tension. Use extre me care when attaching and removing the securing devices as the extreme tension involved when released has the potential to inflict serious injury.

While hauling the tractor and implement, make occasional stops to check that the tractor and implement have not moved or shifted and that the securing chains have maintained tension. If during transport a hard braking, sharp turning, or swerving action was performed, stop at the next safe location to inspect the security of the load. *OPS-U- 0026*

10.TRACTOR, BOOM, AND ATTACHED HEAD STORAGE

Properly preparing and storing the unit at the end of the season is critical to maintaining its appearance and to help ensure years of dependable service. The following are suggested storage procedures:

- Thoroughly clean all debris from boom and head to prevent damage from rotting grass and standing water.
- Lubricate all grease points and fill oil levels according to the maintenance lubrication schedule.
- Tighten all bolts to the proper torque. Ensure all pins and other hardware are in place.
- Check the boom arm and head for worn and damaged parts. Perform repairs and make replacements so that the mower will be ready for use at the start of the next season.
- Store the unit in a clean and dry location.
- Use spray touch-up enamel where necessary on bare metal surfaces to prevent rust and to maintain the appearance of the mower.

OPS-B- 0012_C

DANGER Never allow children to play on or around Tractor or Implement. Children can slip or fall off the Equipment and be injured or killed. Children can caus e the Implement to shif t or fall crushing themselves or others. (SG-25)

DANGER

BEFORE leaving the tractor seat, always set the parking brake and/or set the tractor transmission in parking gear, disengage the PTO, stop the engine, remove the key, and wait for all moving parts to stop. Place the tractor shift lever into a low range or parking gear to prevent the tractor from rolling. Never dismount a Tractor that is moving or while the engine is running. Operate the Tractor controls from the tractor seat only. (SG-9)

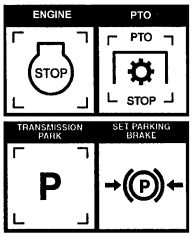

WARNING

Perform service, repairs and lubrication according to the maintenance section. Ensure the unit is properly lubricated as specified in the lubrication schedule and all bolts and nuts are properly torqued. Failure to properly service, repair and maintain this Implement in good operating condition could cause component failure and possible serious injury or even death. (SG-35)

MAINTENANCE SECTION

MAINTENANCE

General Instructions

Tiger Mowers are designed for high performance and rugged durability, yet with simplified maintenance. The purpose of this section of the manual is to help the operator in the regular servicing of the mower. Regular maintenance at the intervals mentioned will result in the maximum efficiency and long life of the Tiger Mower.

When you purchase a Tiger Mower you also acquire another valuable asset, Tigerôs parts organization. Our rapid and efficient service has guaranteed the customer satisfaction for many years. Tiger parts keep up with the demands for efficiency, safety and endurance expected of the Tiger Mower.

Maintenance Precautions

Å Be sure end of grease gun and zerks are clean before using. Debris injected into bearings, etc. with grease will cause immediate damage.

Å DO NOT use a power grease gun to lubricate bearings. These require very small and exact amounts of lubrication. Refer to the detailed maintenance section for specific lubrication instructions. DO NOT over-grease bearings.

Å Lexan windows should be washed with mild soap or detergent and luke warm water, using a soft clean sponge or soft cloth. DO NOT use abrasive or alkaline cleaners or metal scrapers on lexan windows!

Å Be alert to maintenance indicators such as the in-tank filter pressure gauge, hydraulic reservoir sight gauge, etc. Take the required action to correct any problems immediately.

Å Release of energy from pressurized systems may cause inadvertent actuation of cylinders, or sudden release of compressed springs. Before disconnecting any hoses relieve pressure by shutting tractor off, setting cutter on ground and actuating lift valve handles.

WARNING Do not operate this Equipment with hydraulic oil or fuel leaking. Oil and fuel are explosive and their presence could present a hazard. Do not check for leaks with your hand! High-pressure oil streams from breaks in the line could penetrate the skin and cause tissue damage including gangrene. To check for a hose leak, SHUT the unit ENGINE OFF and remove all hydraulic pressure. Wear oil impenetrable gloves, safety glasses and use Cardboard to check for evidence of oil leaks. If you suspect a leak, REMOVE the HOSE and have it tested at a Dealer. If oil does penetrate the skin, have the injury treated immediately by a physician knowledgeable and skilled in this procedure. (SG-15)

Break in Period

In addition to following the break in instructions for your particular tractor, the in-tank hydraulic fluid filter should be replaced after the first 50 hours of service. Thereafter the filter should be replaced every 500 hours, or yearly, which ever comes first.

Re-torque wheel lugs after first five hours of operation and periodically thereafter. See torque specifications listed in the tractorôs service manual for your particular model. **Wheel lugs must always be re-torqued whenever a wheel is removed and reinstalled.**

DANGER Never work under the Implement, the framework, or any lifted component unless the Implement is securely supported or blocked up to prevent sudden or inadvertent falling which could cause serious injury or even death. (SG-14)

WARNING Do not modify or alter this Implement. Do not permit anyone to modify or alter this Implement, any of its components or any Implement function. (SG-8)

WARNING Relieve hydraulic pressure prior to doing any maintenance or repair work on the Implement. Place the Mower Head on the ground or securely supported on blocks or stands, disengage the PTO, and turn off the engine. Push and pull the control Levers or Joystick several times to relieve pressure prior to starting any maintenance or repair work. (SBM-6)

DANGER Always disconnect the wire leads from the mower pump solenoid before performing service on the Tractor or Mower. Use caution when working on the Tractor or Mower. Tractor engine must be stopped before working on Mower or Tractor. The Mower Blades could inadvertently be turned on without warning and cause immediate dismemberment, injury or death. (SBM-12a)

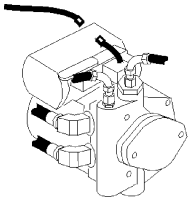

Regular Maintenance

The intervals at which regular servicing should be done are based on hours of operation. Use the tractors hour meter to determine when regular servicing is required.

Daily or Every 8 Hours

ITEM	SERVICE	COMMENTS
Drive Shaft Yoke, U-Joint & Stub Shaft	Grease	Grease as instructed in detailed maintenance section
Pump Drive Shaft Coupler	Check and Lube	Insure drive shaft end play
Crankshaft Adapter	Check rubber grommets	Replace grommets if damaged or missing
Pivot Points	Lubricate	Inject grease until it appears at end

ITEM	SERVICE	COMMENTS
Hydraulic Fittings	Check for leaks	Tighten when needed. Do Not use hands to check for leaks, see maintenance precautions
Knives	Check	Inspect for missing or damaged knives, change as needed or sharpen as needed.
Spindle mounting bolts (spindle to deck)	Check	Torque to 315 ft lbs lubricated. Torque to 357 ft lbs dry.
Knife mounting bolts (knife to disk or blade bar)	Check	Pre-lubricate threads w/ anti-seize, torque to: 1-1/8òknife bolts to 800 ft. lbs. 1-3/4òknife bolts to 2,000 ft. lbs.
Disk or blade bar mntg bolts (disk or blade bar to spindle)	Check	Retorque bolts: 3/4òbolts to 357 dry or 315 oiled ft. lbs. 5/8òbolts to 204 dry or 180 oiled ft. lbs.
Belts	Check/Adjust	Check if broken, tighten as required
Main Frame and Deck	Check	Retorque bolts to torque specifications in this section
Hydraulic Fluid Level	Check	Add if required per fluid recommendations
Rear Flail Drive-(if applicable) Bearing Flange and Shaft Coupler	Lubricate	Grease as instructed in detailed maintenance section.
Ground Roller Bearings	Lubricate	Grease as instructed in detailed maintenance section.
Cuttershaft Bearings (Flail)	Lubricate	Grease as instructed in detailed maintenance section.

WEEKLY OR EVERY 40 HOURS

ITEM	SERVICE	COMMENTS
Rotary Spindle	Lubricate	Every 40 hours or weekly

WEEKLY OR EVERY 50 HOURS

ITEM	SERVICE	COMMENTS
In Tank Hyd. Fluid Filter **10 micron filter**)	Change	Change after first 50 hours only, then every 500 hrs. yearly or if indicated by the restriction indicator.
In-Line High Pressure Filter (**10 micron filter**)	Change	Change after first 50 hours only, then every 500 hrs. yearly or if indicated by the restriction indicator.

MONTHLY OR EVERY 150 HOURS

ITEM	SERVICE	COMMENTS
Hydraulic Fluid Level	Check	Add as needed
Hyd. Tank Breather	Clean/Check/Replace	Clean or replace Element as required
Rear Tire Type	Max P.S.I.	
480/80R38	29	
18.4-34	26	
18.4-38	26	

YEARLY OR EVERY 500 HOURS

ITEM	SERVICE	COMMENTS
Spindle Grease	Change	
Hyd. Tank Fluid	Change	
In Tank Hyd. Fluid Filter (**10 micron filter**)	Change	
In-Line HP Filter (**10 micron filter**)	Change or	Change when indicated by restriction indicator.
Hyd. Tank Breather	Change	

TROUBLESHOOTING

SYMPTOMS	CAUSE	REMEDY
Vibration	1. Loose Bolts 2. Cutter assembly Unbalanced	1. Check all bolts and tighten to recommended torque specifications 2a. Check for damage blades, disc or cutter shaft. Replace if needed. 2b. Check for wire, rope, etc. entangled in the cutter assembly
Mower will not lift	1. Hyd. Fluid Low 2. Leaks in line 3. Faulty relief valve 4. Kinked or blocked 5. Faulty cylinder	1. Check and refill Hyd Fluid 2. Tighten or replace fittings and hoses 3. Check pressure in line. Line pressure in Control Valve should be at least 2500 P.S.I. 4. Clean or replace lines 5. Inspect, repair or replace cylinder
Mower will not start or run	1. Blown fuse 2. Ball valves closed 3. Low oil level 4. Line leak 5. Electronic solenoid faulty	1. Check fuse between mower switch and ignition/replace 2. Make sure valves are open 3. Check Hyd. tank and fill 4. Check all fittings and lines, re-tighten or replace 5a. Without the tractor running, turn the mower switch to on. A low audible click is not heard if the solenoid is engaging the solenoid spool. If click is not heard, leave switch in on position and with a screwdriver or other steel object, touch the small nut on the end of the solenoid. If the metallic object is not attracted to the nut, check the fuse and wiring for an open circuit. If the object is attracted but no ñclickò is heard, replace the solenoid. 5b. Remove the four bolts holding the small block to the main block. Lift and remove small block being careful not to damage O-rings/filter. Clean filter and re-install. 5c. Remove large nut on side of large valve block. Remove spring, and use needle nose vise grip to pull spool from block. Check block for contaminates and scratches. Clean parts or replace if scratched.

TROUBLESHOOTING (Continued)

SYMPTOMS	CAUSE	REMEDY
Motor runs but will not cut.	1. Belts 2. Tensioner	1. Inspect belts and pulleys. Replace belts and repair as needed. 2. Adjust tensioner nut flat washer washer is flush with top of guide.
Mower turns slowly or not at all.	1. Contaminants restricting spool movement in valve body. 2. Suction lines obstructed 3. Low oil level	1. Remove large nut on side of large valve block. Remove spring, and use needle nose vise grip to pull spool from block. Check block and spool for contaminates and scratches. Clean parts or replace if scratched. 2. Check for kinks or obstruction in suction hose. 3. Check Hyd. tank level and fill.
Pump will not work	1. Excessive wear on internal parts	1. Disassemble and repair.
Motor will not work	1. Excessive wear on internal parts	1. Disassemble and repair.

NOTE: If flow meter is available, check pressure and flow volume for all suspected hydraulic problems.

If the solution to your problem cannot be found in this section, call the Technical Service representative at the number shown on the front cover of this manual.

LUBRICATION RECOMMENDATIONS

Description	Application	General Specification	Recommended **Mobil Lubricant**
Tractor Hydraulics	Reservoir	JD-20C	MobilfluidÈ 424
Mower Hydraulics Cold Temperatures 0ÁF Start-Up Normal Temperatures 15ÁF Start-Up	Reservoir	 ISO 46 Anti-Wear-Low Temp ISO 46 Anti-Wear	 Mobil DTEÈ 15M NutoÈH46, Mobil DTEÈ25
Flail Rear Gearbox	Reservoir	PAO Synthetic Extreme Pressure Gear Lube	MobilÈ 1 Synthetic Gear Lubricant LS 75W-90, Mobil Delvac Synthetic Gear Oil 75W-90
Cutter Shaft & Ground Roller Shaft(Flail)	Grease Gun	Lithium-Complex NLGI 2-ISO 320	Mobil DelvacÈ Xtreme Grease Mobilgrease CM-S
Drive Shaft Coupler (Flail and Rotary)	Grease Gun	Lithium-Complex NLGI 2-ISO 320	Mobil DelvacÈ Xtreme Grease Mobilgrease CM-S
Drive Shaft Yoke, U-joint & Stub Shaft	Grease Gun	Lithium-Complex NLGI 2-ISO 320	Mobil DelvacÈ Xtreme Grease Mobilgrease CM-S
Boom Swivel Boom Cylinder Pivots (Rotary & Flail Boom)	Grease Gun	Lithium Complex NLGI 2-ISO 320	Mobil DelvacÈ Xtreme Grease Mobilgrease CM-S
Deck Boom Pivot & Deck Stop Adjustment Rotary & Flail)	Grease Gun	Lithium Complex NLGI 2-ISO 320	Mobil DelvacÈ Xtreme Grease Mobilgrease CM-S
Deck Spindle(Rotary)	Grease Gun	Lithium Complex NLGI 2-ISO 220, PAO Synthetic Grease	Mobilith SHC 220, Tiger Part #06540000

TORQUE SPECIFICATIONS

Nominal Dia. (in.)	threads per inch	Grade 2 Tightening Torque Lubed K = 0.15	Grade 2 Dry Plated K = 0.17	Grade 2 Dry plain K = 0.20	Grade 5 Tightening Torque Lubed K = 0.15	Grade 5 Dry Plated K = 0.17	Grade 5 Dry plain K = 0.20	Grade 8 Tightening Torque Lubed K = 0.15	Grade 8 Dry Plated K = 0.17	Grade 8 Dry plain K = 0.20	Grade 9 Tightening Torque Lubed K = 0.15	Grade 9 Dry Plated K = 0.17	Grade 9 Dry plain K = 0.20
Unified Coarse Thread Series													
1/4	20	49 in-lbs	59 in-lbs	66 in-lbs	76 in-lbs	86 in-lbs	101 in-lbs	107 in-lbs	122 in-lbs	143 in-lbs	126 in-lbs	143 in-lbs	168 in-lbs
5/16	18	101	122	135	157	178	209	221	251	295	259	294	346
3/8	16	15 ft-lbs	18 ft-lbs	20 ft-lbs	23 ft-lbs	26 ft-lbs	31 ft-lbs	33 ft-lbs	37 ft-lbs	44 ft-lbs	38 ft-lbs	43 ft-lbs	51 ft-lbs
7/16	14	24	29	32	37	42	49	52	59	70	61	70	82
1/2	13	37	44	49	57	64	75	80	90	106	94	106	125
9/16	12	53	63	70	82	92	109	115	130	154	135	153	180
5/8	11	73	87	97	113	128	150	159	180	212	186	211	248
3/4	10	129	155	172	200	227	267	282	320	376	331	375	441
7/8	9	125	150	167	322	365	429	455	515	606	533	604	710
1	8	187	225	250	483	547	644	681	772	909	799	905	1065
1 1/8	7	266	319	354	596	675	794	966	1095	1288	1132	1283	1510
1 1/4	7	375	450	500	840	952	1121	1363	1545	1817	1597	1810	2130
1 1/2	6	652	783	869	1462	1657	1950	2371	2688	3162	2779	3150	3706
Fine Thread Series													
1/4	28	56 in-lbs	68 in-lbs	75 in-lbs	87 in-lbs	99 in-lbs	116 in-lbs	123 in-lbs	139 in-lbs	164 in-lbs	144 in-lbs	163 in-lbs	192 in-lbs
5/16	24	112	135	150	174	197	231	245	278	327	287	325	383
3/8	24	17 ft-lbs	20 ft-lbs	23 ft-lbs	26 ft-lbs	30 ft-lbs	35 ft-lbs	37 ft-lbs	42 ft-lbs	49 ft-lbs	43 ft-lbs	49 ft-lbs	58 ft-lbs
7/16	20	27	32	36	41	47	55	58	66	78	68	78	91
1/2	20	41	49	55	64	72	85	90	102	120	105	120	141
9/16	18	59	71	78	91	103	121	128	146	171	151	171	201
5/8	18	82	99	110	127	144	170	180	204	240	211	239	281
3/4	16	144	173	192	223	253	297	315	357	420	369	418	492
7/8	14	138	165	184	355	403	474	502	568	669	588	666	784
1	14	210	252	280	542	614	722	765	867	1020	896	1016	1195
1 1/8	12	298	357	397	668	757	890	1083	1227	1444	1269	1439	1693
1 1/4	12	415	498	553	930	1055	1241	1509	1710	2012	1768	2004	2358
1 1/2	12	734	880	978	1645	1865	2194	2668	3024	3557	3127	3544	4169

Torque values for 1/4 and 5/16-in series are in inch-pounds. All other torque values are in foot-pounds.
Torque values calculated from formula T=KDF, where

K = 0.15 for "lubricated" conditions
K = 0.17 for zinc plated and dry conditions
K = 0.20 for plain and dry conditions

D = Nominal Diameter
F = Clamp Load

Torque-Tension Relationship for Metric Fasteners

Nominal Dia. (mm)	Pitch	Class 4.6 Tightening Torque Lubed K = 0.15 (ft-lbs)	Class 4.6 Dry Plated K = 0.17 (ft-lbs)	Class 4.6 Dry plain K = 0.20 (ft-lbs)	Class 8.8 Tightening Torque Lubed K = 0.15 (ft-lbs)	Class 8.8 Dry Plated K = 0.17 (ft-lbs)	Class 8.8 Dry plain K = 0.20 (ft-lbs)	Class 10.9 Tightening Torque Lubed K = 0.15 (ft-lbs)	Class 10.9 Dry Plated K = 0.17 (ft-lbs)	Class 10.9 Dry plain K = 0.20 (ft-lbs)	Class 12.9 Tightening Torque Lubed K = 0.15 (ft-lbs)	Class 12.9 Dry plain K = 0.20 (ft-lbs)
3	0.5	0.28	0.32	0.38	0.73	0.82	0.97	1.0	1.2	1.4	1.2	1.6
3.5	0.6	0.44	0.50	0.59	1.1	1.3	1.5	1.6	1.9	2.2	1.9	2.5
4	0.7	0.66	0.74	0.87	1.7	1.9	2.3	2.4	2.7	3.2	2.8	3.8
5	0.8	1.3	1.5	1.8	3.4	3.9	4.5	4.9	5.5	6.5	5.7	7.6
6	1	2.3	2.6	3.0	5.8	6.6	7.7	8.3	9.4	11	9.7	13
6	1.25	2.1	2.3	2.7	5.3	6.0	7.0	7.6	8.6	10	8.8	12
7	1	3.8	4.3	5.0	9.7	11	13	14	16	19	16	22
8	1	5.9	6.6	7.8	15	17	20	22	24	29	25	34
8	1.25	5.5	6.2	7.3	14	16	19	20	23	27	24	31
10	1.25	11	13	15	29	33	39	42	48	56	49	66
10	1.5	11	12	14	28	32	37	40	45	53	47	62
12	1.25	21	23	28	53	60	71	76	86	101	89	119
12	1.5	20	22	26	51	58	68	73	82	97	85	113
12	1.75	19	21	25	49	55	65	70	79	93	81	108
14	1.25	26	29	34	66	75	89	95	108	127	111	148
14	1.5	28	32	37	72	82	96	103	117	138	121	161
14	2	30	34	40	78	88	104	111	126	148	130	173
16	1.5	50	57	67	129	146	171	184	208	245	215	287
16	2	47	53	62	121	137	161	173	196	230	202	269
18	1.5	73	82	97	187	212	249	268	303	357	313	417
18	2.5	65	73	86	167	189	222	239	270	318	279	372
20	1.5	101	115	135	270	306	360	374	424	498	437	583
20	2.5	91	104	122	236	267	314	337	382	449	394	525

Clamp load calculated as 75% of the proof load for specified bolts.
All torque values are listed in foot-pounds
Torque values calculated from formula T=KDF, where

K = 0.15 for "lubricated" conditions
K = 0.17 for zinc plated, dry conditions
K = 0.20 for plain and dry conditions

D = Nominal Diameter
F = Clamp Load

*These are general specifications. Check your tractor operators or service manual for exact specifications.

POLYCARBONATE CARE & MAINTENANCE

The proprietary UV and Abrasion Resistant Surface coating on SHIELDSÈ SUPERCOATEDÊ polycarbonate significantly improves performance. Periodic cleaning using proper procedures and compatible cleaners are recommended to prolong service life. Tiger Corp. polycarbonate is SUPERCOATEDÊ on both sides.

CLEANING THE SUPERCOATÊ HARD-COAT

1. Wash with a mild solution of soap or detergent and lukewarm water.
2. Using a soft cloth or sponge, gently wash the sheet to loosen dirt and grime and rinse well with clean water.
3. To prevent water spotting, thoroughly dry with chamois or cellulose sponge.
4. Avoid the use of abrasive cleaners, squeegees and/or other cleaning implements that may mar or gouge the coating.

CLEANING AGENTS W HICH HAVE BEEN FOUND TO BE COMPATIBLE UNDER LABORATORY CONDITIONS:

Å Aqueous Solutions of Soaps and Detergents

Windex(1)	Top Job(2)	Joy(2)	Mr Clean(2)
Fantastik(3)	Formula 409(4)	Sumalight D12	Brucodecid

Å Organic Solvents

Butyl Cellosolve	Kerosene	Hexel, F.O. 554	Naphtha (VM&P grade)
Neleco-Placer	Turco 5042		

Å Alcohols

Methanol	Isopropyl

All residual organic solvents should be removed with a secondary rinse.

GRAFFITI REMOVAL

Butyl cellosolve (for removal of paints, marking pen inks, lipstick, etc.) The use of masking tape, adhesive tape or lint removal tools work well for lifting off old weathered paints.

To remove labels, stickers, etc., the use of kerosene or VM&P naphtha are generally effective. When the solvent will not penetrate sticker material, apply heat (hair dryer) to soften the adhesive and promote removal.

IMPORTANT: If a material is found to be incompatible in a short-term test, it will usually be found to be incompatible in the field. The converse, however, is not always true. Favorable performance is no guarantee that actual end-use conditions have been duplicated. Therefore, these results should be used as a guide only, and it is recommended that the user test the products under actual end-use conditions.

RECOMMENDED FILLING INSTRUCTIONS FOR HYDRAULIC RESERVIORS

When filling or checking the oil level, the unit should be parked on a level surface., shut òOFFò and allow sufficient time to cool to ambient temperature. Use caution when removing the pressurized breather. Do not place face o ver opening when removing breather.

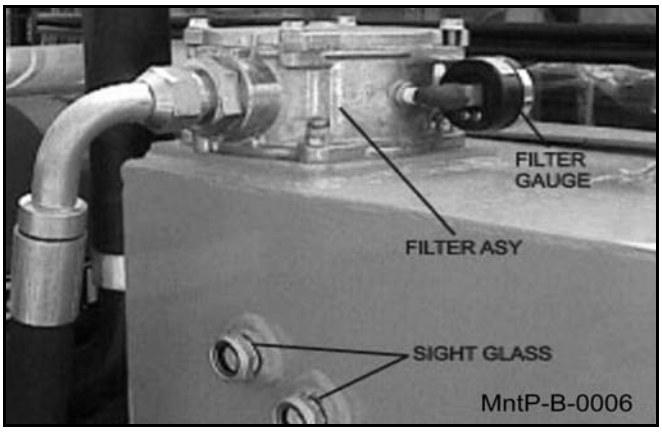

If your reserv oir has two sight glasses: The reservoir should be filled to the top of the lower sight glass on the side of the tank. Do not overfill. The reservoir has been over-filled when oil is visible in the upper sight glass. If tank has too much oil, the excess may be expelled through the pressurized breather.

If your reservior has one sight glass/temperature gage: The reservior should be filled to the center of the sight glass on the side of the tank. Do not over-fill. If the tank has too much oil, the excess may be expelled through the pressurized breather

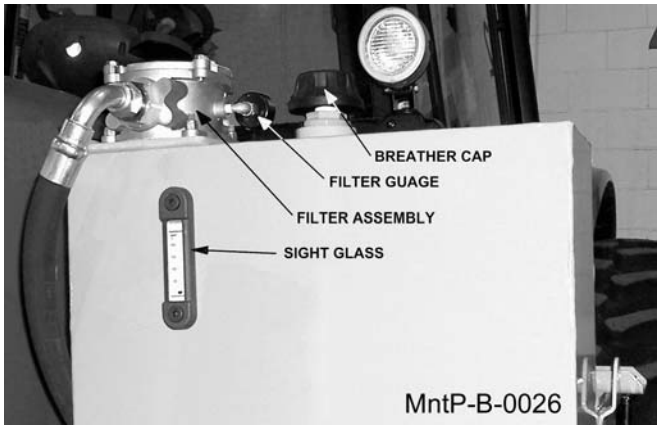

DETAILED MAINTENANCE

REPLACING IN-TANK HYDRAULIC FILTER:

Loosen the four bolts on the top cover of the filter housing. Turn cover counter-clockwise until cover is free. Remove and replace filter. Replace top cover and cover bolts in opposite order as removed.

DETAILED MAINTENANCE

REPLACING HIGH PRESSURE HYDRAULIC FILTER ELEMENT:

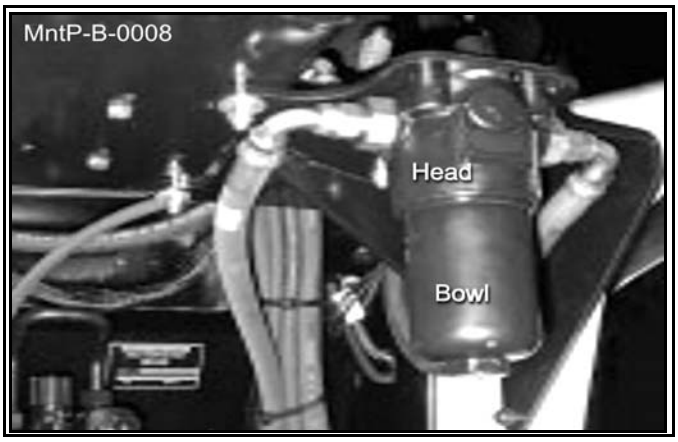

Ensure system has been shut down and de-pressurized. Locate High Pressure Filter housing. Confirm that the element to be installed matches the element p/n on the filter model tag. *Example: V3.0510-06 (world line 100, HD049 model)* Locate the bottom of the High Pressure Bowl. Using the appropriate spanner wrench or ratchet, turn in a counterclockwise rotation, (looking at the bottom of the bowl) to remove the bowl from the head. The first couple rotations will seem tight as the o-ring passes the sealing flats. Once the o-ring has cleared the sealing flats the bowl should spin freely. Taking care not to drop the bowl, finish removing the bowl from the head. **WARNING: bowl will be full of oil!**

Pour the oil from the bowl into a container. This oil should be considered contaminated because the flow through the element is outside-in. Clean the inside of the bowl if dirt is present. Remove the old element from the filter head by pulling with a rotation motion. Dispose of the used element properly. Using your finger, dab and lubricate the o-ring in the top of the new element with oil. Install the new element onto the mounting boss within the head. Ensure that the element is fully seated on the boss. Clean and inspect the o-ring that is affixed in the bowl and lubricate with oil. Using a clockwise rotation, screw the bowl back into the head, ensuring that the bowl has not been cross-threaded into the head. Continue to tighten the bowl into the head, using the spanner wrench or ratchet. The rotation of the bowl will become tighter once the o-ring engages the sealing flats. Once the bowl has bottomed out, back-off the bowl by 1/6 turn. This ensures that the o-ring is seated properly within the sealing flats. Element change out and re-assembly is now complete. Start the machine and inspect the filter area checking that there is no oil leaking from the filter assembly.Replace the filter element first at 50 hours of operation, then yearly (500 hours) or when indicated by restriction indicator.

GREASING CUTTERSHAFT - FLAIL MOWERS

Locate grease zerks on each end of cuttershaft(s), these are located on the bearing cover. Normal conditions require one or two pumps in each bearing, using Lithium-Complex Extreme Pressure grease conforming to NLGI2-ISO 320 specifications. This is to be done with a standard grease gun daily or at **8 hour intervals.** ***CAUTION: Over greasing may cause premature seal failure.***

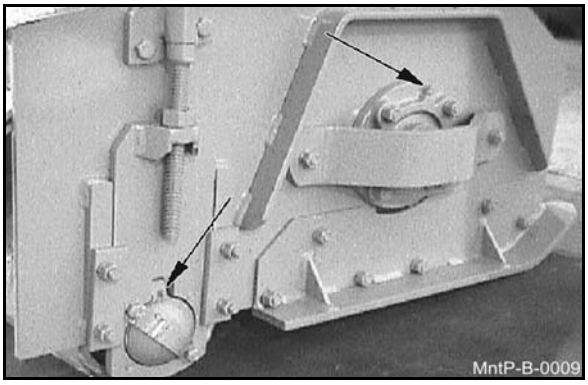

GREASING GROUND ROLLER SHAFT-FLAIL

Locate grease zerks on each end of roller tube at lower end of head. Normal conditions require one or two pumps in each bearing, using Lithium-Complex Extreme Pressure grease conforming to NLGI2-ISO 320 specifications. This is to be done with a standard grease gun daily or at **8 hour intervals.** ***CAUTION: Over greasing may cause premature seal failure.***

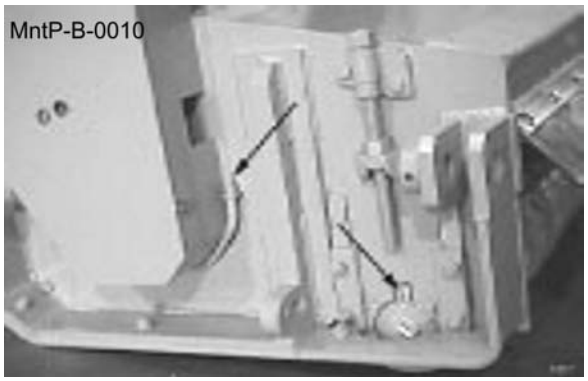

ADJUSTING/CHECKING BELT TENSION

To adjust belt tension or replace belts on flail cutter head, remove four bolts that secure belt to cover and remove cover. The hex nuts shown below can be adjusted to increase/decrease the belt tension as needed. *(**NOTE:** Location of adjustment nuts may vary on flail cutter heads.)* **Be sure to replace the belt cover BEFORE operating mower!**

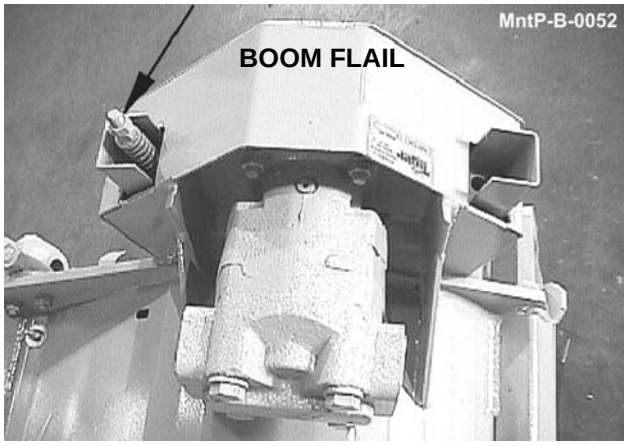

BALL VALVES

The ball valve at the hydraulic reservoir may need to be closed during certain maintenance or repair procedures. **THE BALL VALVES MUST BE OPEN (handle parallel with valve) WHEN TRACTOR IS RE-STARTED OR PUMP IS COUPLED TO MOTOR OR PTO!** Failure to do so will result in component failure!

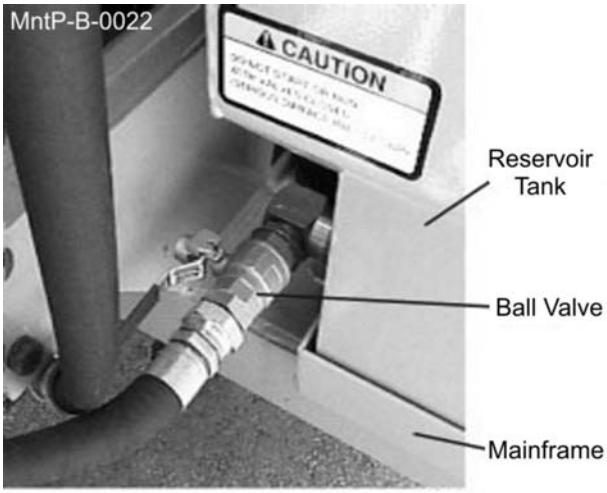

TIGHTENING KNIFE BOLTS AND DISK BOLTS:

BOOM ROTARY (SABER X3) - After every 8 hours of operation or daily, the Knife Bolts and Disk Bolts should be tightened as follows:

1-1/8ò knife mounting bolts (2 ea.) torque to 870 ft. lbs. lubricated.

5/8ò disk mounting bolts (6 ea.) torque to 180 ft lbs lubricated with Loctite 271, 204 ft. lbs. dry.

d

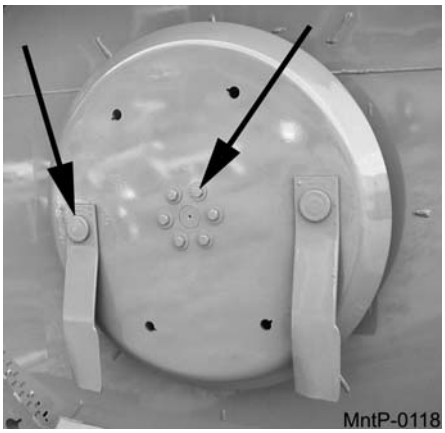

BOOM ROTARY

SABER ROTARY - After every 8 hours of operation or daily, the knife bolts and blade bar bolts should be tightened as follows:

Knife mounting bolts (A): Torque to 2000 ft. lbs., lubricated.

3/4ò blade bar mounting bolts (B): Torque to 315 ft. lbs. lubed (LocktiteÈ 271) or 357 ft. lbs. dry (plated bolts).

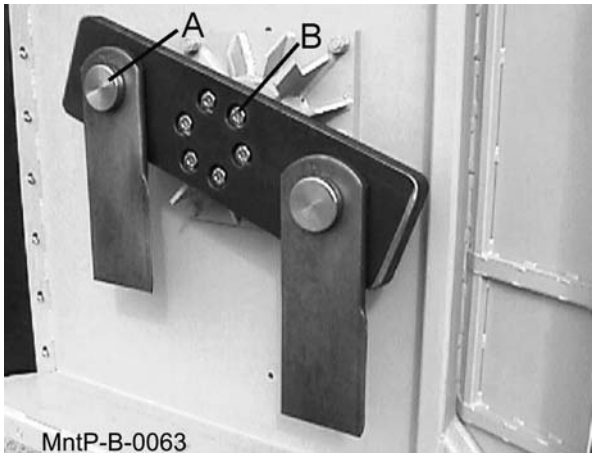

SABER ROTARY

GREASING POINTS ON BOOM AND PIVOT

Locate grease zerks (8) on deck pivot assembly, (2) on the deck end of secondary boom, (2) at main/secondary boom joint, and (2) at swivel end of main boom. Inject Lithium-Complex Extreme Pressure grease conforming to NLGI2-ISO 320 specifications until grease begins to protrude from ends.

SABER

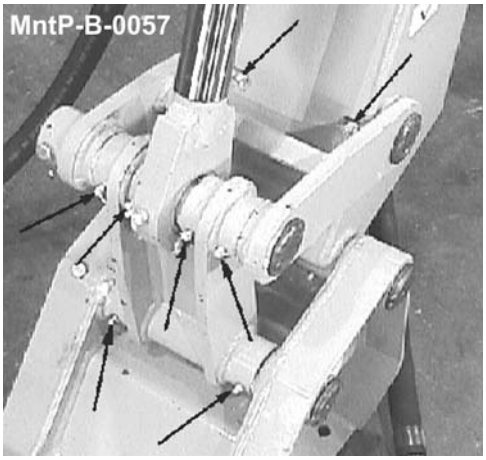

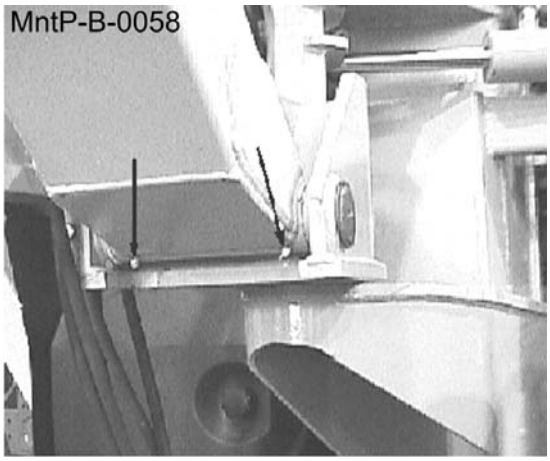

GREASING SPINDLE

Locate grease fitting on inside of deck housing. Inject Tiger Spindle Lubricant, part number 06540000 into spindle housing. Fill with lubric ant until lubricant weeps out of top spindle seal. Lubricate spindle weekly or every 40 hours of use.

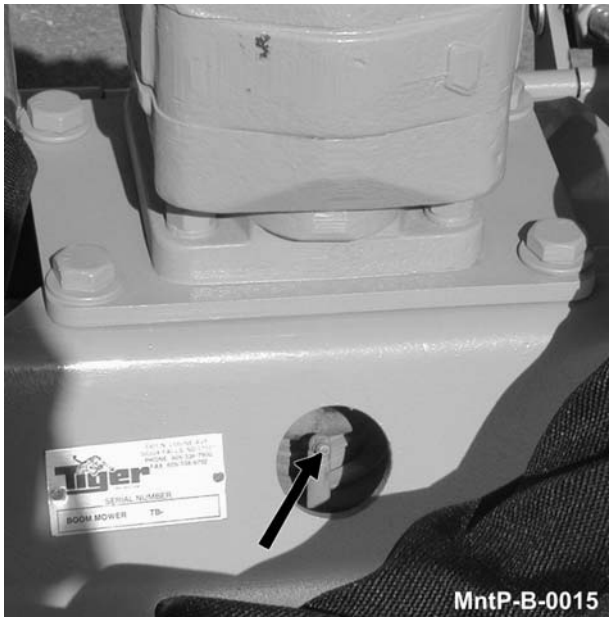

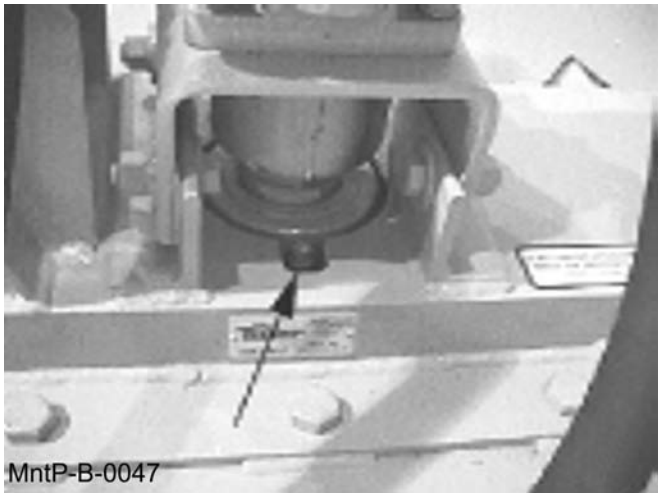

TIGHTENING SPINDLE BOLTS

The spindle mounting bolts should be checked and retorqued daily or every 10 hours of service. Torque the (6) bolts shown below to 331 ft. lbs.

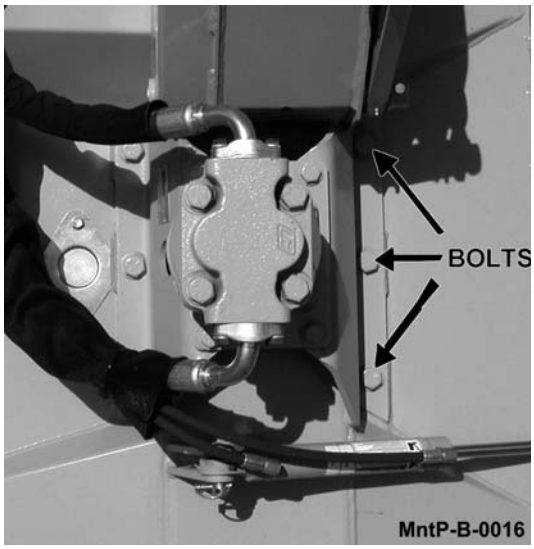

GREASING PUMP DRIVESHAFT COUPLER

With engine stopped, ensure driveshaft alignment by grasping coupler and sliding back and forth. Coupler should slide freely with approximately 1/8ò of end play. If coupler does not slide freely, inspect for loose pump mount bolts, or damaged or loose crank shaft adapter. Inject Lithium-Complex Extreme Pressure grease conforming to NLGI2-ISO 320 specifications into coupler until grease begins to protrude from ends. Grease daily or every 8 hours. Do not over grease.

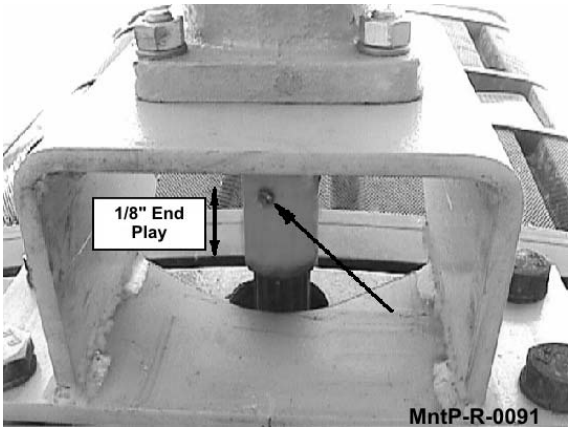

DRIVE SHAFT YOKE, U-JOINT 7STUB SHAFT

With engine stopped, inject Lithium-Complex extreme pressure grease confirming to NLGI2-ISO 320 specifications into universal joints and slip yoke until grease appears at the seal. Grease them daily or every 8 hours.

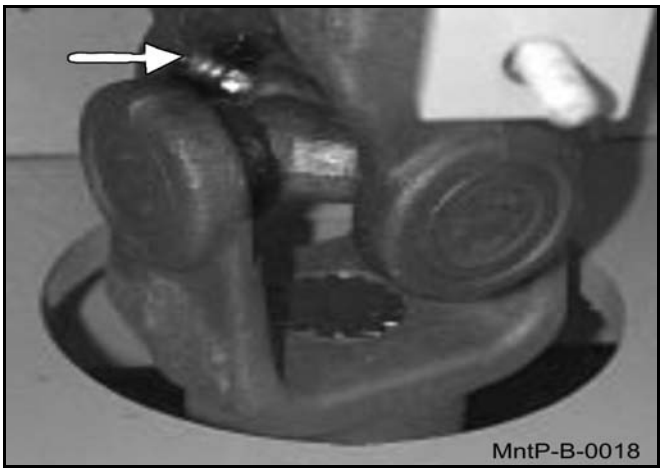

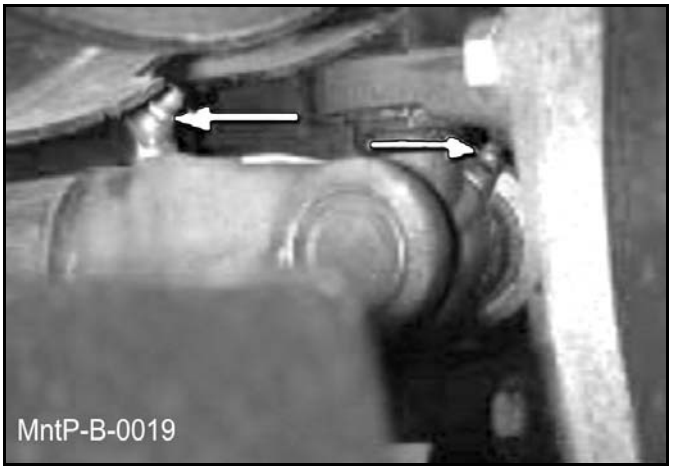

GREASING THE BOOM SWIVEL

Locate the zerks on the main swivel boss (2), main boom pivot boss (2) and on both ends of the boom swivel cylinder. Inject Lithiu m-Complex Extreme Pressure grease conforming to NLGI2-ISO 320 specification until grease begins to protrude from ends every 8 hours.

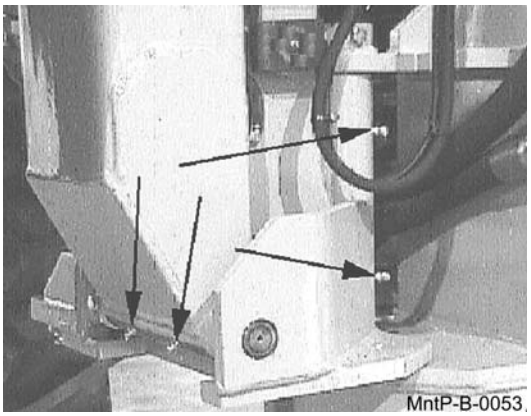

BOOM SWIVEL

SABER SWIVEL

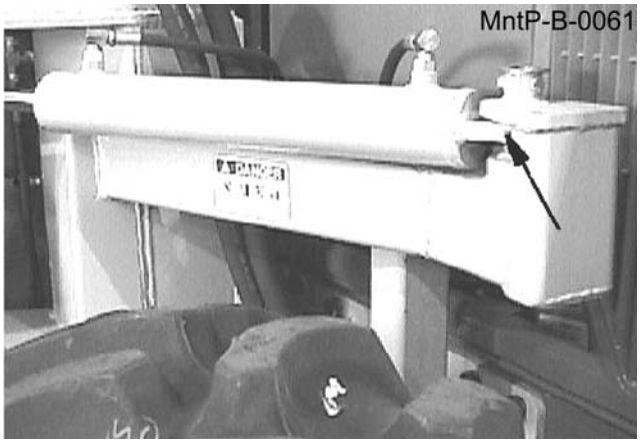

SABER SWIVEL

GREASING BOOM CYLINDER(S) PIVOT POINTS

Locate the zerk on the butt end tang of cylinder and on rod end tang. Inject Lithium-Complex Extreme Pressure grease confirming to NLGI2- ISO 320 specifications until grease begins to protrude from ends. This procedure is to be used on the main boom cylinder, secondary boom cylinder, deck pivot, and swivel cylinders daily or at 8 hour intervals.

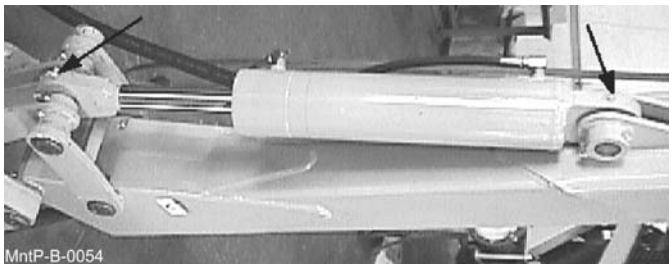

Blades

Check the Blades for cracks and wear and Blade Bolts for tightness, daily. Blades should be replaced when they are worn excessively, bent, deformed, or out of balance.

CAUTION Blades should always be replaced in pairs. Blades of different weights can cause serious imbalance and damage to the machine and personnel. When replacing blades, take care to replace the blade bolts, nuts, and washers.

Important Make sure the mower blades are turning clockwise when looking down from the top of the mower. Follow the color coding on the hydraulic hoses and fittings to make sure the motor and hydaulics hoses are assembled properly. Connect the red hose connection only to red fitting. Connect the blue hose connection only to the blue fitting. The blade rotation on the leading edge of the mower should discharge the cut material away from the tractor and operator.

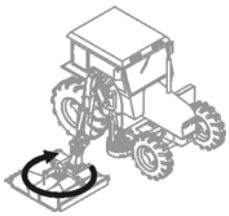

WARNING If the leading edge of the mower blades are rotating backwards they can discharge material toward the operator. If this occurs discontinue mowing immediately and reverse the direction of the motor rotation by correctly installing the motor pressure and return hoses. Contact your dealer or Alamo Industrial for specific information on the hose routing.

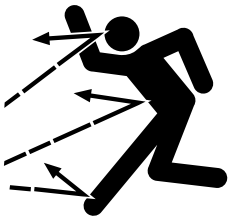

1.

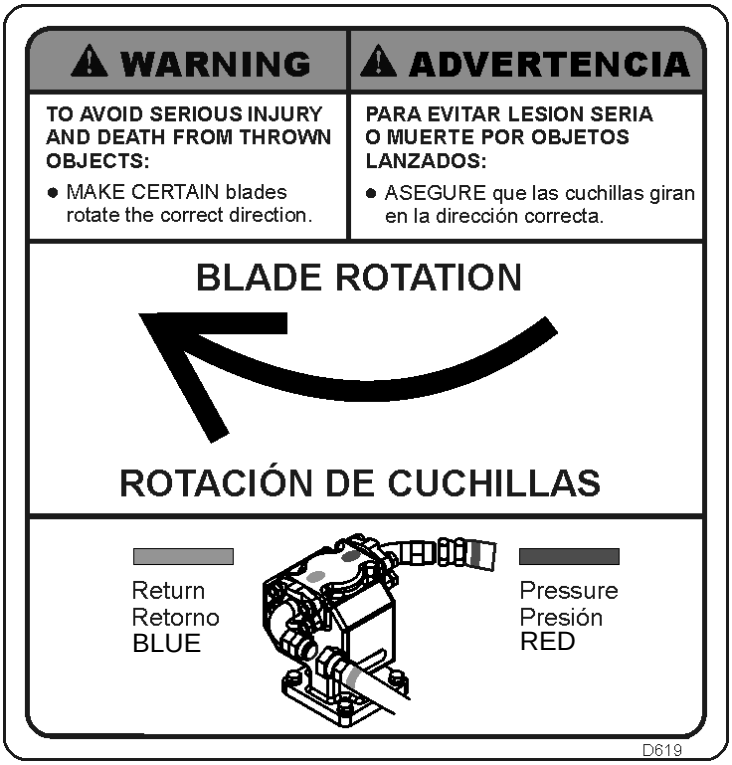

ROTARY KNIFE REPLACEMENT (TRB 50)

1. Be sure you have a complete matching set of new knives for replacement.

2. Remove knives and inspect holes for damage. Also watch for cracks in the disk around the holes.

3. Lube threads with anti-seize. Install bolts through knife and disk from bottom side of disk. Install new self-locking nuts and torque them to 800 ft. lbs.

4. The knives should swing freely to absorb shocks from impact when striking objects.

WARNING **WHEN CUTTING HEAVY BRUSH, KNIFE BOLTS SHOULD BE INSPECTED HOURLY AND RETORQUED TO 800 LUBRICATED FT. LBS.**

ROTARY KNIFE REPLACEMENT (SABER 50” ROTARY)

1. Be sure you have a complete matching set of new knives for replacement.

2. Remove knives and inspect holes for damage. Also watch for cracks in the disk around the holes.

3. Lube threads with anti-seize. Install bolts through knife and disk from the bottom side of disk. Install new self-locking nuts and torque them to 2000 ft lbs.

4. The knives should swing freely to absorb shocks from impact when striking objects.

REPLACEMENT OF ROTARY DISK (TRB 50)

1. The bolts that attach the disk to the spindle must be grade 8. These 5/8 inch bolts are to be torqued to 204 dry or 180 ft. lbs lubed with Loctite 271.

2. A thread locking agent may be applied to threads of all mounting bolts before they are installed.

3. Disks must be inspected daily for hairline cracks between spindle mounting bolts or around the knife mounting bolts. These cracks indicate metal fatigue caused by severe abuse. If cracks are present the disk must be replaced.

4. Inspect the disk mounting bolts daily when checking tightness of knife mounting bolts. If a disk mounting bolt is loose, it must be removed, threads cleaned, fresh thread locking agent applied, and tightened to proper torque value.

5. If a knife mounting bolt is loose, the self locking nut must be replaced as a safety precaution. Lubricate threads with anti-seize. Install bolts through knife and disk from bottom side of disk. Install self locking nuts and torque them to 800 ft. lbs.

REPLACEMENT OF SABER 50” ROTARY BLADE BAR

1. The bolts that attach the blade bar must be grade 8. These 3/4ò bolts are to be torqued to 357 ft lbs dry or 315 ft lbs lubed with Loctite 271.

2. A thread locking agent may be applied to threads of all mounting bolts before they are installed.

3. Inspect daily for hairline cracks around knife and blade bar mounting bolts. These cracks indicate metal fatigue caused by severe abuse. If cracks are present the knives and blade bar must be replaced.

4. Inspect the blade bar mounting bolts when checking tightness of knife mounting bolts. If a blade mounting bolt is loose, it must be removed, threads cleaned, frest thread locking agent applied, and tightened to proper torque value.

5. If a knife mounting bolt is loose, the self-locking nut must be replaced as a safety precaution. Lubricate threads with anti-seize. Install bolts and self-locking nuts and torque to 2000 ft lbs.

Flail Blades Inspection

DANGER Inspect the Blades daily for ab normal wear. REPLACE ALL BLADES on the carrier IMMEDIATELY if any blades have:

Å Become bent or deformed from its original shape, or
Å Wear inside the blade bolt hole, or
Å Any cracks are visible, or
Å Deep gouges in the blade's surface are present, or
Å Gouges or chipped areas in the cutting edge are larger than 1/4ò(8mm), or
Å The material on the leading edge has been worn away by more than 1/4ò(8mm)

DO NOT straighten, sharpen, weld or hard-face blades

Failure to replace worn or damaged blades may lead to catastrophic failure of the blades and ejection of the broken part with tremendous force which may cause serious bodily injury or death.

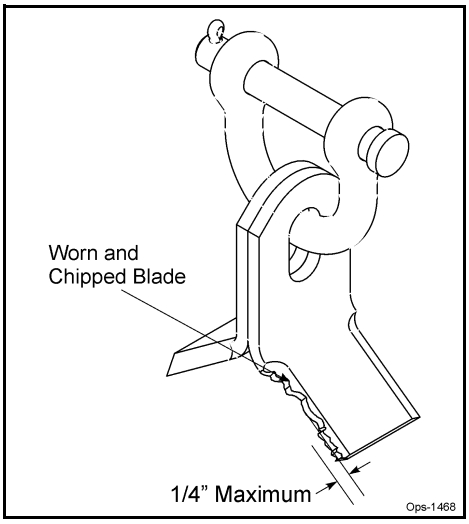

Always replace blades in sets

Å Blades that are damaged may indicate severe service or abuse. If one blade is worn or damaged other blades on the same shaft will have been subjected to the same severe service or abuse.
Å The Flail rotor turns at sp eeds exceeding 2000 RPM and is dynamically balanced at the factor y. Differences in blade weight between used blades with loss of material from gouges or wear as compared to new blades can cause severe vibration and damage to the Flail rotor. Always replace blades as complete sets.

Important Use only g enuine Alamo Industrial replacement blades and fasteners. Other blades and fasteners may not meet the Alamo Industrial requirements and could fail during operation resulting in part being thrown out from under the mower.

CAUTION Never attempt to sharpen blades. ***OPS-U-0044***

Blade Pins and D-Ring Inspection

Inspect Blade Pins and D-Rings daily for wear or damage as follows:

DANGER Inspect the Blade pins and D-Rings daily for abnormal wear. Make sure the cotter pins are in place and properly spread. REPLACE BLADE Pins and D-Rings IMMEDIATELY if they have:

Å Visible cracks or
Å If a Pin or D-Ring has visible worn areas, or
Å If a Pin or D-Ring has gouges or chipped areas

Failure to replace abnormally worn pins or D-Rings may lead to catastrophic failure and ejection of the broken part, which may cause serious bodily injury or death.

Always replace the pins and D-Rings whenever excessive wear is noticed.

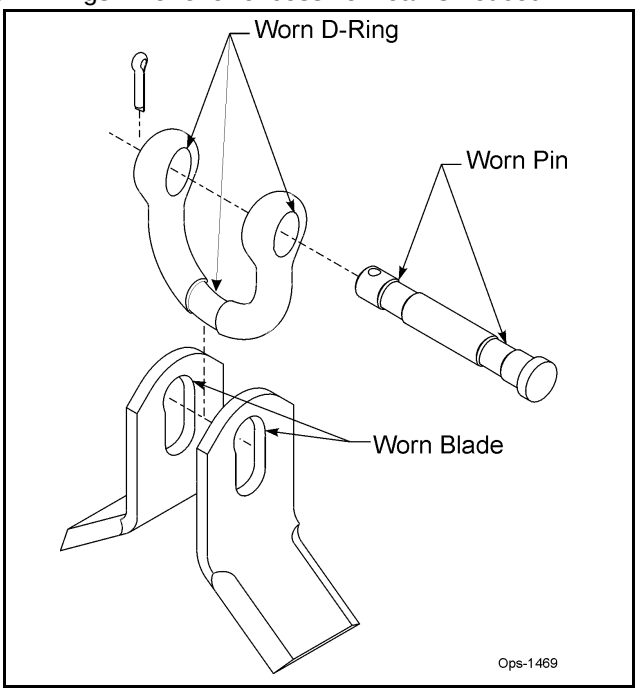

Important If the cotter pins are broken by contact with other flail blades, remove the pin and reverse the direction the pin is inserted through the D-Ring so that the cotter pin is on the opposite side of the D-Ring. This will prevent the next set of blades from swinging back and hitting the cotter pin. ***OPS-U-0045***

Flail Axe Blades Inspection

DANGER Inspect the Blades daily for ab normal wear. REPLACE ALL BLADES on the carrier IMMEDIATELY if any blades have:

- Become bent or deformed from its original shape, or
- Oval shape wear inside the blade bolt hole, or
- Any cracks are visible, or
- Deep gouges in the blade's surface are present, or
- Gouges or chipped areas in the cutting edge are larger than 1/4" (8mm), or
- The material on the leading edge has been worn away by more than 1/4" (8mm)

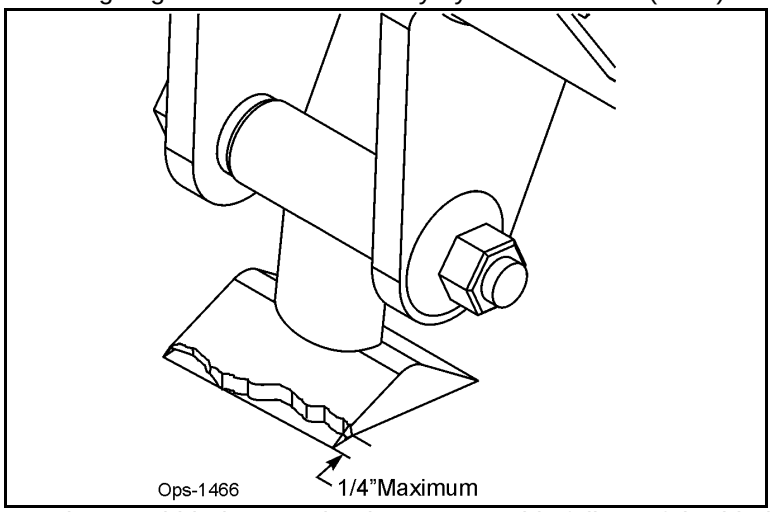

Failure to replace worn or damaged blades may lead to catastrophic failure of the blades and ejection of the broken part with tremendous force which may cause serious bodily injury or death.

Always replace blades in sets

- Blades that are damaged may indicate severe service or abuse. If one blade is worn or damaged other blades on the same shaft will have been subjected to the same severe service or abuse.
- The Flail Axe rotor turns at speeds exceeding 2000 RPM and is dynamically balanced at the factory. Differences in blade weight between used blades with loss of material from gouges or wear, as compared to new blades, can cause severe vibration and damage to the Flail Axe rotor. Always replace blades as complete sets.

Important Use only genuine Alamo Industrial replacement blades, blade bolts and fasteners. Other blades and bolts may not meet the requirements of Alamo Industrial and may fail during operation, resulting in the part failing and being thrown out from under the mower.

CAUTION Never attempt to sharpen blades. ***OPS-U-0042***

Flail Axe Blade Bolt Inspection

Inspect Blade Bolts daily for wear or damage as follows:

DANGER Inspect the Blade Bolt daily for abnormal wear. REPLACE ALL BLADE BOLTS on the carrier IMMEDIATELY if any bolts have:

Å Visible cracks or
Å If the blade bolt is worn or any recessed area is visible on the bolt, or
Å If Blade Bolt has gouges or chipped areas. or
Å If Bushing fits loose in the Rotor Shaft.

Failure to replace abnormally worn bolts or bushings may lead to catastrophic failure of the blades and ejection of the broken part, which may cause serious bodily injury or death.

Always replace Blade Bolts with new bolts and new bushings whenever replacing the Blades. To tighten bolts and nuts, first apply thread lock to nut. Make sure to tighten bolts and nuts just enough to allow the blades to swing freely and not bend the cuttershaft lugs. If cuttershaft lugs are bent together because of over tightening the blades will not swing freely. *OPS-U-0043*

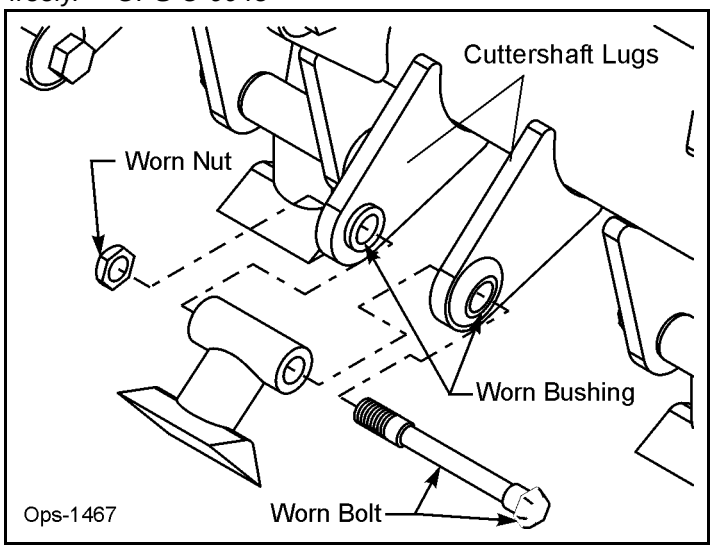

50” FLAIL KNIFE BLADE REPLACEMENT

1. If knives are damaged or badly worn, they will need to be replaced as a set. Replacing a single knife can cause severe vibration and possible damage to the mower. The knife should not be welded on for any reason.
2. Always replace the knife bolts when replacing the knives. DO NOT REUSE THE KNIFE BOLTS OR NUTS.
3. Assemble knives, bushings, bolts and nuts as shown in part section of the manual.
4. Install the locking hex nut so that the flat face of the nut is towards the knife.
5. Apply LoctiteÈ ñ271ò or equivalent to threads.
6. Torque nut to 52 ft. lbs. Knife must swing freely.

WARNING **DO NOT re-use the locking hex nuts for mounting the knives. If hex nut becomes loose, or requires removal for knife replacement or any other reason, they must be discarded and replaced with new nuts.**

WARNING **Knives should not be welded on for any reason.**

63” BOOM FLAIL KNIFE REPLACEMENT

1. If knives are damaged or badly worn, they will need to be replaced as a set. Replacing a single knife can cause severe vibration and possible damage to the mower.
2. Assemble knives, clevis, bolts and nuts as shown in part section of manual.
3. Install locking hex nut so that the flat face of nut is towards the knife.
4. Apply Loctite 271 or equivalent to threads.
5. Torque nut to 52 ft lbs. Knife must swing freely.

WARNING **DO NOT re-use the locking hex nuts for mounting the knives. If hex nut become loose, or require removal for knife replacement or any other reason, they must be discarded and replaced with new nuts.**

WARNING **Knives should not be welded on for any reason.**

FLAIL AXE BLADE KNIFE REPLACEMENT

If knives are damaged or badly worn, they will need to be replaced as a set. Replacing a single knife can cause severe vibration and possible damage to the mower. The knives should not be welded on for any reason. When replacing knives, replace bushings, bolts and hex nuts.

Apply LoctiteÈ 271 or equivalent to threads and install the locking hex nuts so that the flat face of the nut is towards the knife. Torque the hex nut to 159 ft. lbs. lubricated.

WARNING **DO NOT re-use the locking hex nuts for mounting the knives. If hex nut becomes loose, or requires removal for knife replacement or any other reason, they must be discarded and replaced with new nuts.**

WARNING **Knives should not be welded on for any reason.**

HEAVY DUTY SPINDLE ASSEMBLY INSTALLATION AND BEARING ADJUSTMENT

WARNING A press MUST be used to install bearing cups, bearing cones, and seals. DO NOT use a hammer to install races, bearings, or seals. The parts of assembly may be damaged.

***NOTE**: The grease zerk and gussets are located on the top side of the spindle housing. Be sure the spindle is assembled correctly.*

Be sure to wear eye protection and other protective equipment as needed when working on spindle assembly.

THE SPINDLE ASSEMBLY

See the diagram below for identification of spindle parts, while servicing.

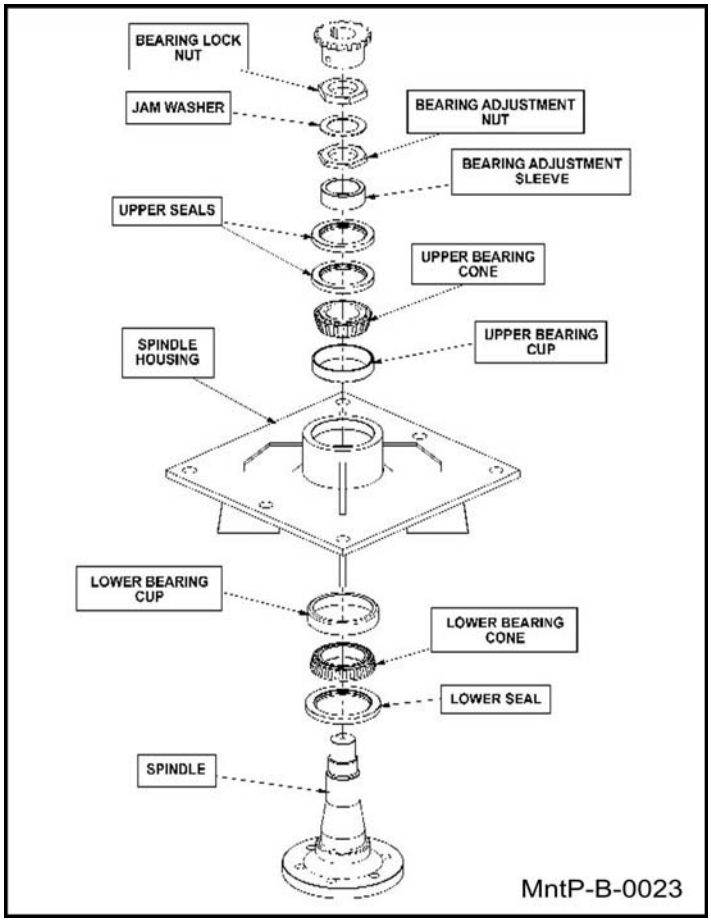

SPINDLE BEARING INSTALLATION

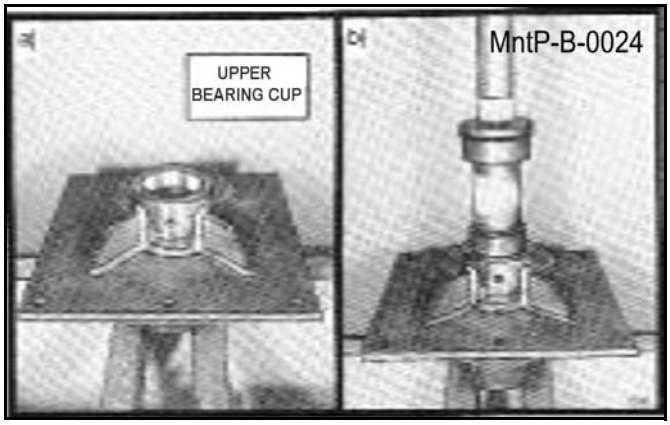

1. Press upper bearing cup in to the spindle housing
2. Turn the spindle housing over and press in the lower bearing cup.
3. Place the lower bearing cone in the bearing cup. Next press t he seal into the s pindle housing. The inner lip of the seal must be DOWN, towards the bearing, so lubricant is sealed inside the housing.
4. Install the spindle in the housing. Lightly tap the end of th e spindle with a sof t faced hammer to sea t the spindle against the bearing inner race.
5. Turn the spindle housing over (up position) and fill with T iger Spindle Lubricant (part number 06540000) to the top edge of the upper bearing cup.
6. Support the bottom of the spindle and press the upper bearing cone and bearing adjustment sleeve onto the spindle.

NOTE: *The spindle housing must turn freely when seating the bearing cone and sleeve.*

7. Press the two upper seals into the spindle housing. The inner lip of the seals must be UP, away from the bearing, so excess lubricant can escape.
8. Install the b earing adjustment nut (thin nut) so there is 1-1/6ò clearance between the n ut and the sleeve. Install the jam washer, placing the tab into the key-way. Install the bearing locknut (thin nut) and hand tighten against jam washer and adjustment nut. See the following section for bearing adjustment.

SPINDLE BEARING ADJUSTMENT

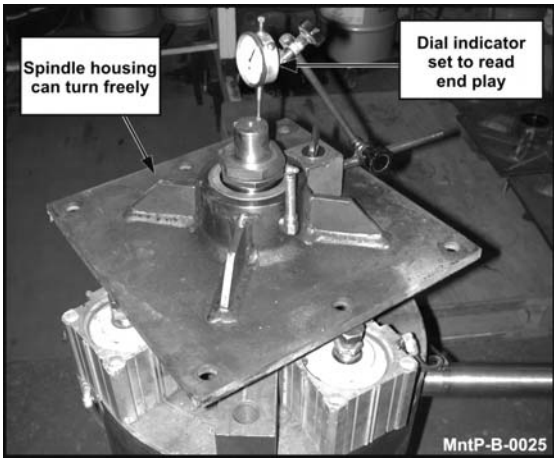

1. Clamp the bottom end of the spindle securely in a v ise so the spindle hous ing turns freely.
2. Position a magnetic base dial indicator on the outer diameter of the spindle housing. Locate the end of the dial indicator against the flat end of th e spindle shaft. The dial indicator will now measure ac curately bearing end play.
3. Tighten the bearing adjustment nut until there is .012 inch mov ement when the spindle housing is pried upward away from the vise jaws.
4. When there is .012 inch free play between the spindle and housing, install the bearing lock nut (thick nut). Hold the adjusting nut securely and tighten the lock nut to 300 ft. lbs. of torque.
5. After the lock nut is tightened, there must be .001 inch to .003 inch of free play when lightly prying up on the spindle housing.

If the end play is co rrect, .001 inch to .003 inch, be nd tabs up on jam wa sher to prevent the locknut fro m loosening.

If the end play is NOT correct, loosen the lock nut and turn the adjustment nut as required and re-tighten the locknut. Repeat first part of step 5.

Boom Cylinder Removal and Replacement Instructions

1. Clear the area of all personnel before lowering the boom mower head.
2. From the tractor seat with your seat belt fastened around you, lower the boom mower head to the ground. Extend the boom to the furthest reach and lower the mower head flat on the ground. DO NOT attempt to replace the cylinders with the boom in the raised or transport position.
3. Shut off the tractor, engage the parking brake, place the tractor transmission in the park position, and remove the key before dismounting.
4. Allow the system to cool to room temperature before removing any hydraulic components
5. Wear safety glasses and impenetrable gloves when working with hydraulic hoses and fittings.
6. Release all oil pressure from the hydraulic circuit by manually stroking each valve section with the tractor engine off. Utilize the manual ov erride function if the unit is equipped with an electric over hydraulic valve.
7. Utilize blocks, jack stands or a suitable over head hoist to support the weight of the boom section and remove pressure form the cylinder mounting pins.
8. Check to see that the cylinder to be replaced is not under pressure by moving the cylinder pins by hand. The pins should be loose and should slide form the pin bore easily. If the pins are tight and cannot be moved, the cylinder may be under pressure. Make sure the boom components are properly supported and that the pressure is relieved from the circuit.
9. Cylinder assemblies are heavy and can fall when the pins are removed. Support the hydraulic cylinder with a suitable hoist or jack.
10. Slowly loosen the hydraulic connections to the cylinder. Carefully unscrew hose fitting and allow any remaining pressure to bleed off. **Use extreme care**. Oil must be cool, and the technician should stand to the side to prevent exposure to any hydraulic oil. Always consult the Material Safety Data Sheet and wear any required personal protective equipment. A catch pan may be required to retain any spilled oil.
11. Cap both ends of the fitting with suitably sized metal caps.
12. Remove the cylinder pins starting with the ROD end cylinder pin. Make sure the cylinder is properly supported, and remove the base end cylinder pin. The cylinder may be heavy, use proper lifting techniques to lift and handle the cylinder. If needed, get assistance from another person to safely lift the cylinder from the machine.
13. Measure the distance between the cylinder pin holes and extend the new cylinder the correct length prior to attempting an installation.
14. Install the new cylinder in place and install both cylinder pins and retaining hardware.
15. Remove the metal caps, and re-install the hydraulic hoses.
16. Check the hydraulic reservoir of the boom mower to ensure there is suf ficient oil. Follow the manufactures recommendations for proper oil type and filtering techniques and requirements to add oil to the system.
17. Clear the area of all persons prior to starting the tractor.
18. Consult the Operator's Manual for instruction in regard to the proper operating procedure.
19. From the tractor seat, with the seat belt fastened, operate the boom to ensure proper operation of the boom function.
20. From the tractor seat, with the seat belt fastened, operate the boom controls to fully extend and retract the new cylinder several times to purge any trapped air from the system.
21. From the tractor seat, with the seat belt fastened, look for signs of and oil leak. If an oil leak is observed, shut the tractor down and follow the steps to remove pressure from the hydraulic circuit. Identify the source of the leak, and resolve the issue.
22. Upon completion of the required repairs, return to Step # 16 to recheck the cylinder for proper operation.

CUTTERSHAFT BEARING REPLACEMENT FOR FLAIL MOWERS

1. Remove existing cuttershaft, bearings and string guards.
2. Make sure that the end knives on each end of the cuttershaft are oriented as shown.
3. Apply anti-seize on cuttershaft as shown on next page.
4. Install non-drive side bearing first.
5. Install the top of the string guard on the non-drive side first. Use Loctite-271 or equivalent and torque (95 ft-lb or 104ft-lb if you use an extension).
6. Install the bearing and top string guard on the drive side.
7. Center the cuttershaft between the string guards. Use Loctite-271 or equivalent and torque (95ft-lb or 104ft-lb if you use an extension) the top string guard on the drive side.
8. Install, use Loctite-271 or equivalent, and torque (95ft-lb or 104ft-lb if you use an extension) the bottom string guard on both sides.
9. Make sure the cuttershaft is centered. On the non-drive side, tighten one set screw in the bearing onto the cuttershaft.
10. Remove the other set screw and drill a 5/16ò hole into the cuttershaft 3/16ò deep through the hole in the bearing. BE CAREFUL NOT TO DAMAGE THE THREADS IN THE BEARING HOLE.
11. Replace the set screw in the bearing, use Loctite-271 or equivalent, and tighten onto the cuttershaft through the new hole.
12. Remove the other set screw and repeat the drilling procedure (Step 10). Replace the set screw as stated in Step 11.
13. Repeat steps 9 through 12 on the drive side.
14. Grease both bearings properly.

See illustration on next page

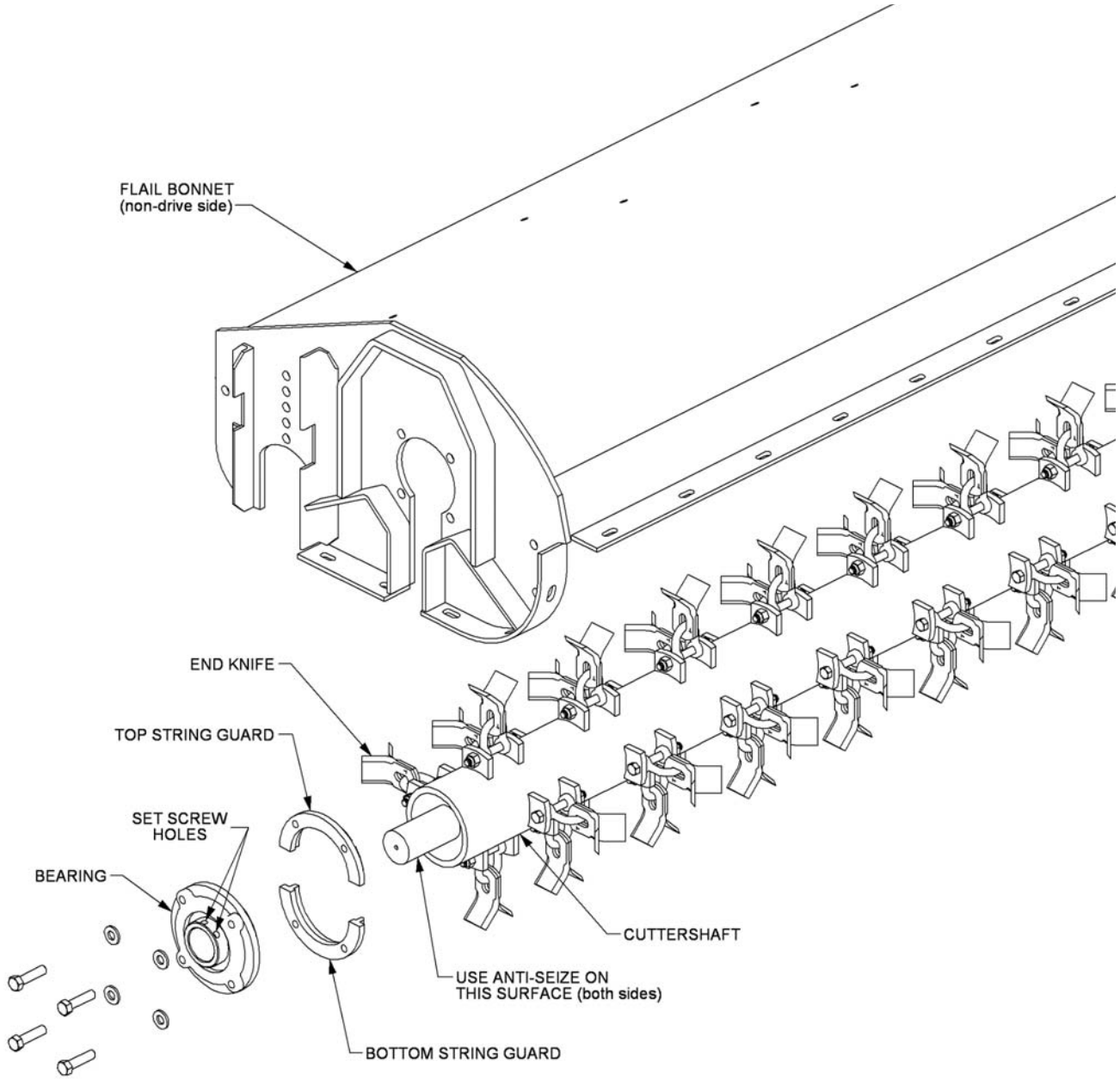

DAILY MAINTENANCE SCHEDULE

The following services should be performed daily or every 8 hours of service, following the detailed maintenance instructions in the operator's manual.

_____ Pump driveshaft: If required with drive shaft/coupler check for end play and lubricate at zerks.

_____ Crankshaft adapter: If equipped with rubber grommets check condition, replace if missing or damaged.

_____ Pivot points: Inject grease until it appears at ends.

_____ Hydraulic fittings: Check for leaks with paper or cardboard. Tighten fittings or replace hoses immediately.

_____ Knives: Inspect for missing or damaged knives, change (only complete sets) as needed.

_____ Knife Bolts (SABER 1-3/4"): Check/torque to 2,000 ft. lb.

_____ Bolts: disk/spindle (SABER 3/4"x 2"): Check/torque to 331 ft. lb.

_____ Belts: Check/tighten/replace belts as needed.

_____ Mainframe/deck: Unless otherwise specified retorque bolts according to torque specifications in this section.

_____ Hydraulic fluid level: Add, if required, per fluid recommendations.

_____ Rear flail drive, bearing flange and shaft couplers: Grease as instructed in the detailed maintenance section.

_____ Cuttershaft and ground roller: Grease as instructed in the detailed maintenance section.

Service performed by:_____ Date:____/____/____ Hour

Meter:_____

Maintenance Section

**This page may be copied and used as part of the daily maintenance routine.

PARTS SECTION

PART NAME INDEX

PARTS ORDERING GUIDE

The following instructions are offered to help eliminate needless delay and error in processing purchase orders for the equipment in this manual.

1. The Parts Section is prepared in logical sequence and grouping of parts that belong to the basic machine featured in this manual. Part Numbers and Descriptions are given to help locate the parts and quantities required.

2. The Purchase Order must indicate the **Name and Address** of the person or organization ordering the parts, **who should be charged**, and if possible, the **serial number of the machine** for which the parts are being ordered.

3. The purchase order must clearly list the **quantity of each part**, the complete and correct **part number**, and the basic **name of the part**.

4. The manufacturer reserves the right to substitute parts where applicable.

5. Some parts may be unlisted items which are special production items not normally stocked and are subject to special handling. Request a quotation for such parts before sending a purchase order.

6. The manufacturer reserves the right to change prices without prior notice.

NOTE: When ordering replacement decals, refer to the part numbers and descriptions listed in the safety section in the front of this manual.

1000

For maximum safety and to guarantee optimum product reliability, always use genuine **Tiger** replacement parts. The use of inferior replacement parts may cause premature or catastrophic failure which could result in serious injury or death.

Direct any questions regarding parts to:

Tiger Corporation
3301 N. Louise Ave.
Sioux Falls, SD 57107
1-800-843-6849
1-605-336-7900

TRACTOR MOUNT KIT

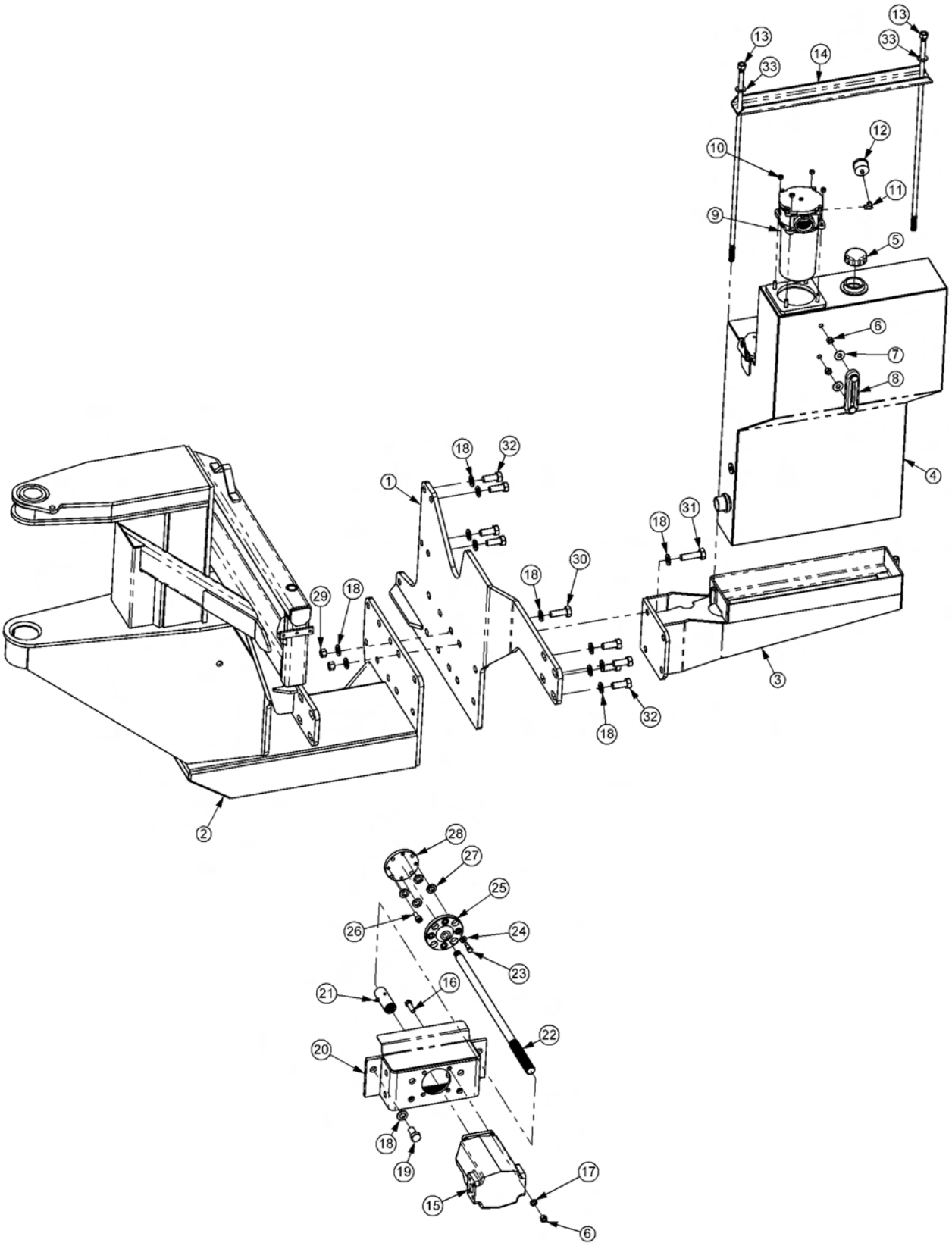

NH T6000 SABER

Continued...

ITEM	PART NO.	QTY.	DESCRIPTION
1	06300076	1	FRM,LH,SBR
2	06300075	1	MNFRM,SBR
3	06300080	1	MNT,TANK
4	06380012	1	TANK,RESERVOIR
5	06505077	1	CAP,BREATHER
6	21725	6	HEX NUT,1/2",NC
7	22018	2	FLATWASHER,1/2",WIDE
8	06505067	1	SIGHT GAUGE
9	06505044	1	FLTR ASSY,IN-TANK CPLT
10	21627	4	NYLOCK NUT,3/8",NC
11	TF4888	1	STREET ELBOW,1/8" X 90
12	6T0649	1	FILTER GAUGE
13	06380014	2	TIE BOLT,SIDE TANK,HYDRO
14	06410352	1	CHANNEL,MNT,TANK,TIE-BOLT
15	23152	1	PUMP
16	21732	4	CAPSCREW,1/2" X 1-3/4",NC
17	21990	4	LOCKWASHER,1/2"
18	33880	40	FLATWASHER,3/4",SAE
19	24860	6	CAPSCREW,20MM X 40MM,2.5P
20	32408	1	PUMP MTG BRKT
21	6T0375B	1	COUPLING,14 SPLINE,W/ZERK
22	34624	1	DRV SHF,PMP,28-13/16"
23	06535000	4	CAPSCREW,7/16" X 1-1/4",CUTOFF
24	24937	4	FLATWASHER,7/16",SAE
25	31674	1	CRNKSHFT ADPT,IHC 895 W/O WASH
26	06530503	4	CAPSCREW,SKTHD,12MM X 30MM,1.75P
27	06537004	4	WASHER,NEOPRENE,.75" X 1.25" X .19"
28	06420006	1	SPACER,DRV SHFT
29	21825	10	HEX NUT,3/4",NC
30	21833	6	CAPSCREW,3/4" X 2-1/4",NC
31	21835	4	CAPSCREW,3/4" X 2-3/4",NC
32	31731	16	CAPSCREW,20MM X 50MM,2.5P
33	33764	2	FLATWASHER,5/8",SAE

TRACTOR MOUNT KIT - HYDRAULICS

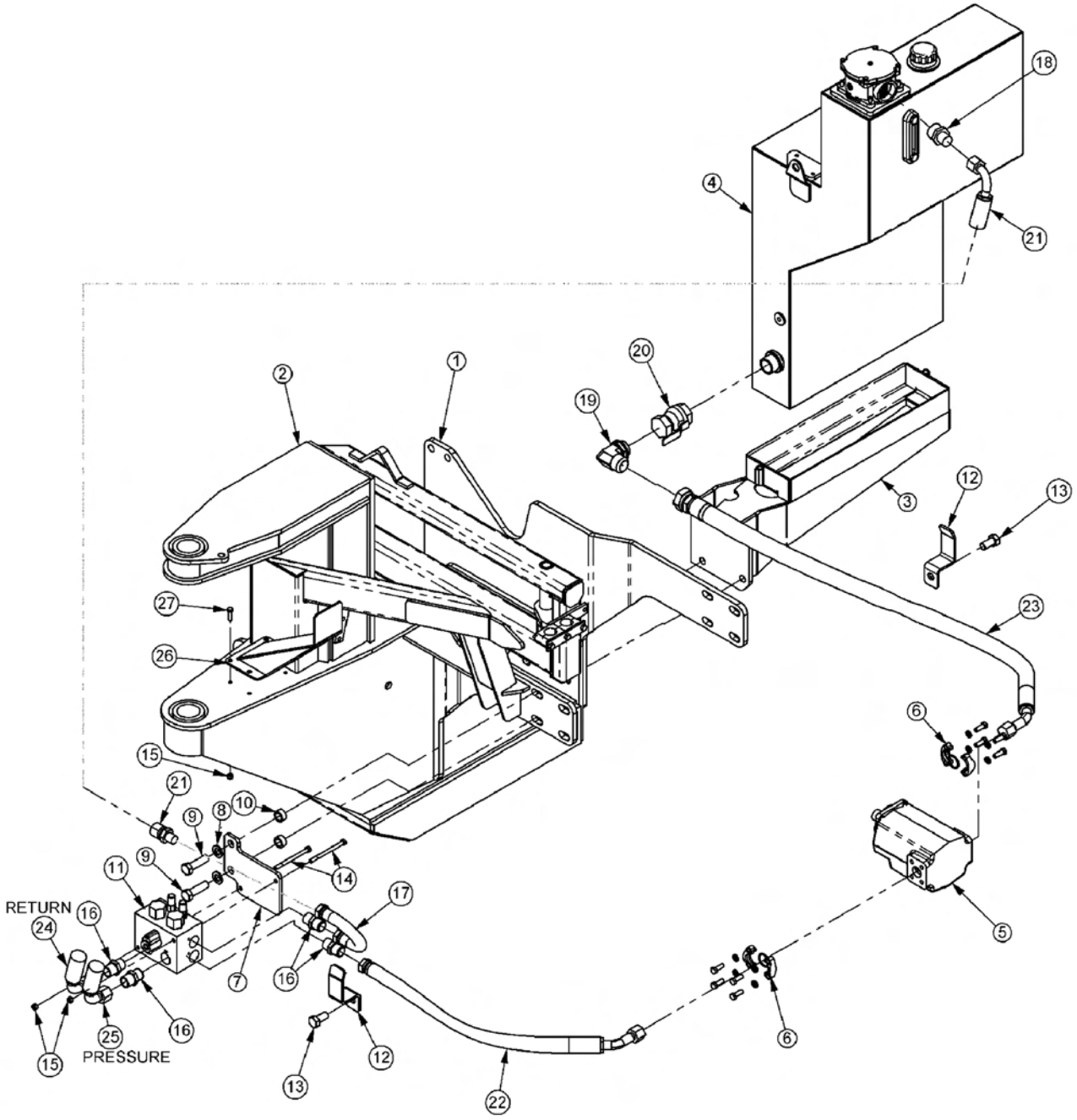

NH T6000 SABER

Continued...

ITEM	PART NO.	QTY.	DESCRIPTION
1	06300076	1	FRM,LH,SBR
2	06300075	1	MNFRM,SBR
3	06300080	1	MNT,TANK
4	06700090	1	TANK,ASSY
5	23152	1	PUMP
6	TF4852	2	KIT,FLANGE,#20
7	06400114	1	MNT,BRAKE VALVE
8	33880	2	FLATWASHER,3/4",SAE
9	25341	2	CAPSCREW,20MM X 70MM,2.5P
10	24849	2	SPACER,7/8"ID X 1-1/4"OD X 5/8"
11	06510084	1	VALVE,BRAKE,3500PSI
12	32382	3	BRACKET,HOSE
13	24860	3	CAPSCREW,20MM X 40MM,2.5P
14	21644	2	CAPSCREW,3/8" X 5",NC
15	21627	2	NYLOCK NUT,3/8",NC
16	33555	4	ADAPTER,1"MOR X 1"MJ
17	06506012	1	PRFRMD,BRKVLV,4" X 1"FJX X 1"FJX
18	34064	1	ADAPTER,1-1/4"MOR X 1"MJ
19	34655	1	ELBOW,1-1/2"MOR X 1-1/2"MJ
20	34309	1	BALL VALVE,1-1/2"FOR
21	06500320	1	HOSE,1" X 109"
22	06500066	1	HOSE,1" X 37"
23	06500309	1	HOSE,1-1/2" X 70"
24	06500365	1	HOSE,1" X 118" (RETURN)
25	06500364	1	HOSE,1" X 123" (PRESSURE)
26	06370104	1	GUIDE,HOSES
27	21631	4	CAPSCREW,3/8" X 1-1/4",NC

AXLE BRACE AND BATTERY BOX

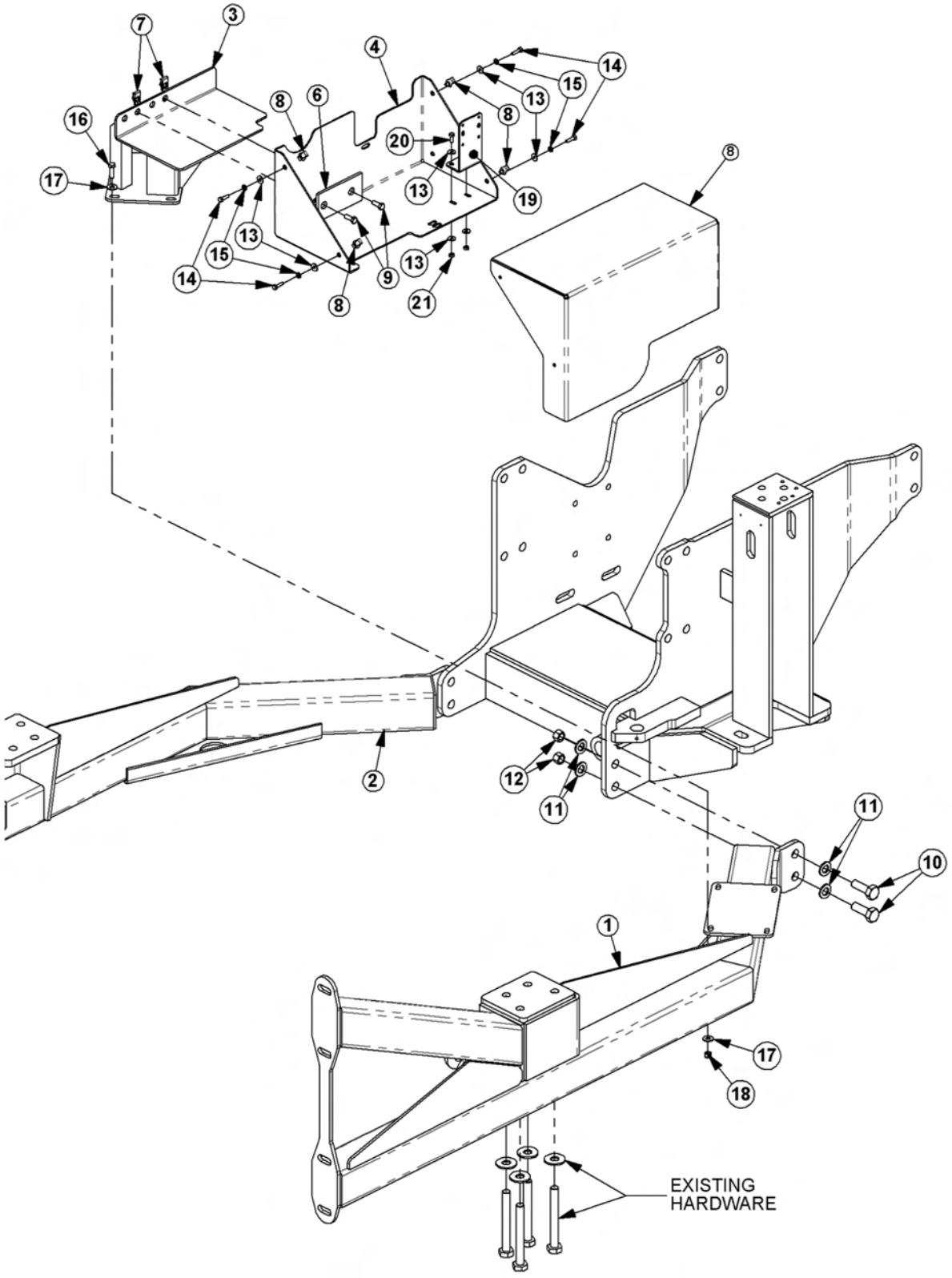

NH T6000 SABER

AXLE BRACE AND BATTERY BOX

Continued...

ITEM	PART NO.	QTY.	DESCRIPTION
1	06300031	1	AXL BRC RH
2	06300032	1	AXL BRC,LH
3	21825	2	HEX NUT,3/4",NC
4	33880	4	FLATWASHER,3/4",GR8,SAE
5	21833	2	CAPSCREW,3/4" X 2-1/4",NC
6	06370160	1	MNT,BATT BOX
7	06410146	1	COVER,BOT,BATTERY BOX
8	06410145	1	COVER,TOP,BATTERY BOX
9	32739	1	PAD,BATTERY BOX
10	06537029	2	U-NUT,3/8",NC,3/4" TO CENTER
11	35176	4	U-NUT,1/4",NC,3/4" TO CENTER
12	21630	2	CAPSCREW,3/8" X 1",NC
13	22014	8	FLATWASHER,1/4”
14	21530	4	CAPSCREW,1/4" X 1",NC
15	21986	4	LOCKWASHER,1/4"
16	21631	4	CAPSCREW,3/8" X 1-1/4",NC,GR8
17	22016	8	FLATWASHER,3/8",GR8
18	21627	4	NYLOCK NUT,3/8",NC
19	06410531	1	MNT,CABLE,BATT (IF NECESSARY)
20	21529	2	CAPSCREW,1/4" X 3/4",NC (IF NECESSARY)
21	21525	2	HEX NUT,1/4",NC (IF NECESSARY)

MID-MOUNT VALVE RELOCATION

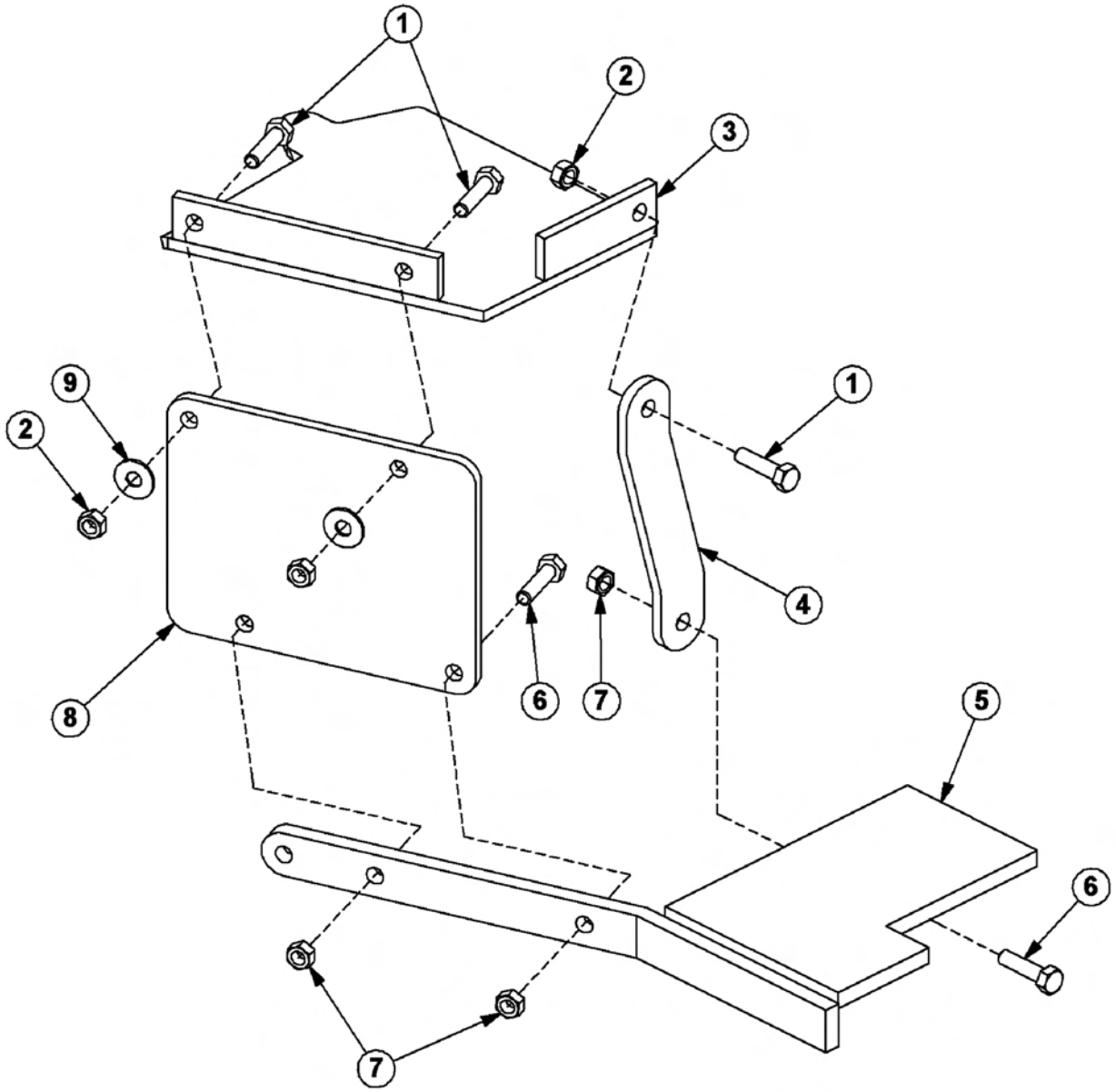

NH T6000 SABER

Continued...

ITEM	PART NO.	QTY.	DESCRIPTION
1	------	3	CAPSCREW (EXISTING HARDWARE)
2	------	3	HEX NUT (EXISTING HARDWARE)
3	------	1	VALVE MOUNTING PLATE,TOP (EXISTING)
4	06411134	1	STRAP,VLV,RELOCATE
5	------	1	VALVE MOUNTING PLATE,BOTTOM (EXISTING)
6	21581	3	CAPSCREW,5/16" X 1-1/4",NC
7	21577	3	NYLOCK NUT,5/16",NC
8	06401528	1	PLATE,VLV,RELOCATE
9	------	2	FLATWASHER (EXISTING HARDWARE)

JOYSTICK AND SWITCH BOX MOUNT

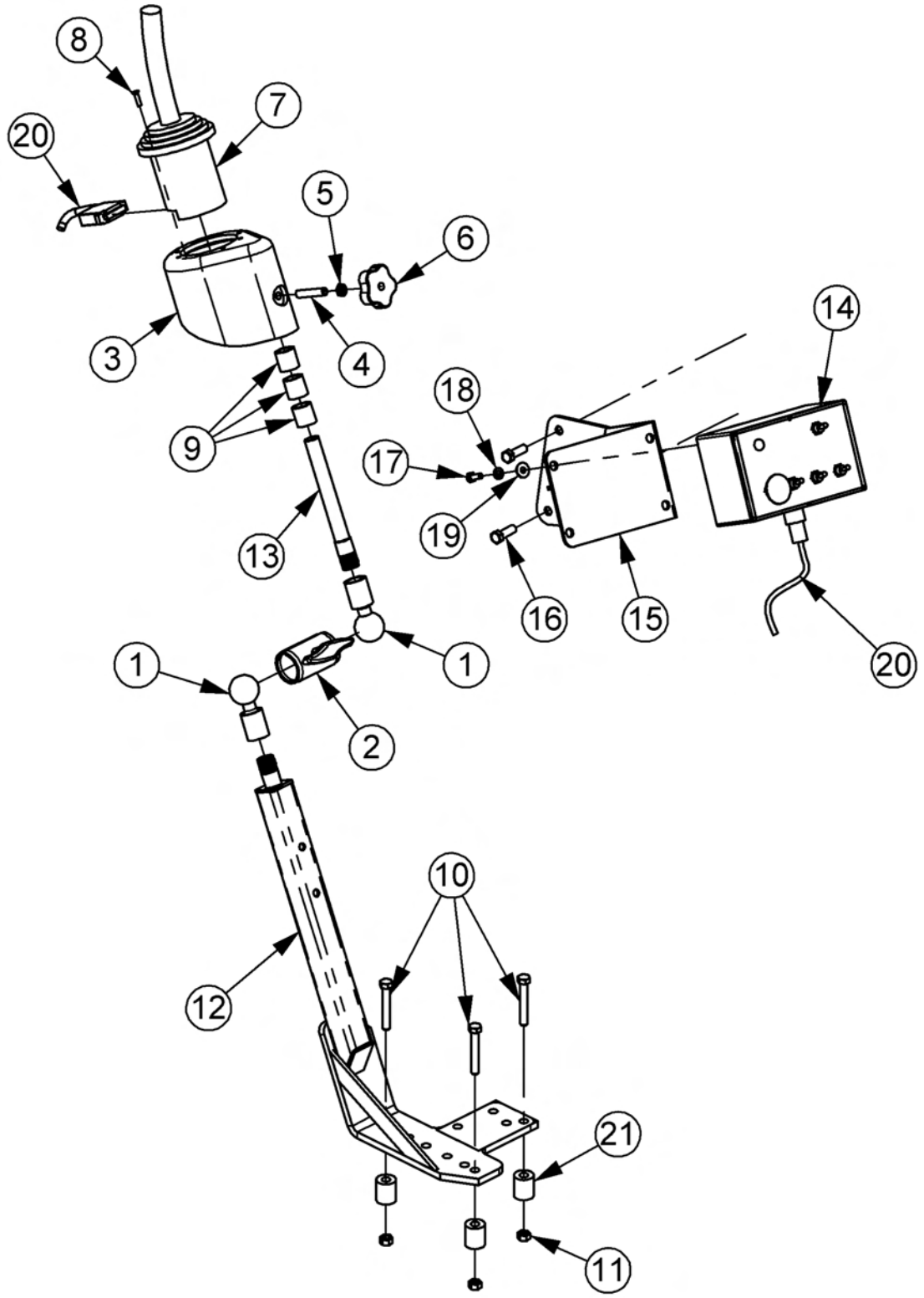

NH T6000 SABER

Continued...

ITEM	PART NO.	QTY.	DESCRIPTION
1	06520041	2	MOUNT,RAM,BALL,1-1/2",NPT
2	06520042	1	MOUNT,RAM,ARM,1.5" X 2.75"
3	35033	1	CAN,JYSTK,CPLT,DF
4	35205	1	SETSCREW,3/8" X 2",NC,KNURLED PT
5	35206	1	HEX NUT,JAMB,3/8",NC
6	35204	1	KNOB,3/8",NC,INSERT
7	33691	1	JOYST,4AXIS,RH
8	32829	4	SCREW,MACHINE,10-32 X 3/4",FLTHD
9	35256	3	BUSHING,NYLON,1"OD,3/4"ID
10	21636	3	CAPSCREW,3/8" X 2-1/2",NC
11	21627	3	NYLOCK NUT,3/8",NC
12	06340011	1	MNT,STND,JYSTK
13	06340010	1	ROD,1/2"NPT X 7",JYSTK
14	06510196	1	SWITCH BOX,BOOM
15	33355	1	MNT,BRKT,SWITCH BOX
16	23113	2	CAPSCREW,10MM X 30MM,1.5P
17	21529	4	CAPSCREW,1/4" X 3/4",NC
18	21986	4	LOCKWASHER,1/4"
19	22014	4	FLATWASHER,1/4"
20	33693	1	CBL,EXT,4FT
21	27082B	3	SPACER

ELECTRONIC PROPORTIONAL LIFT VALVE - LOAD SENSE

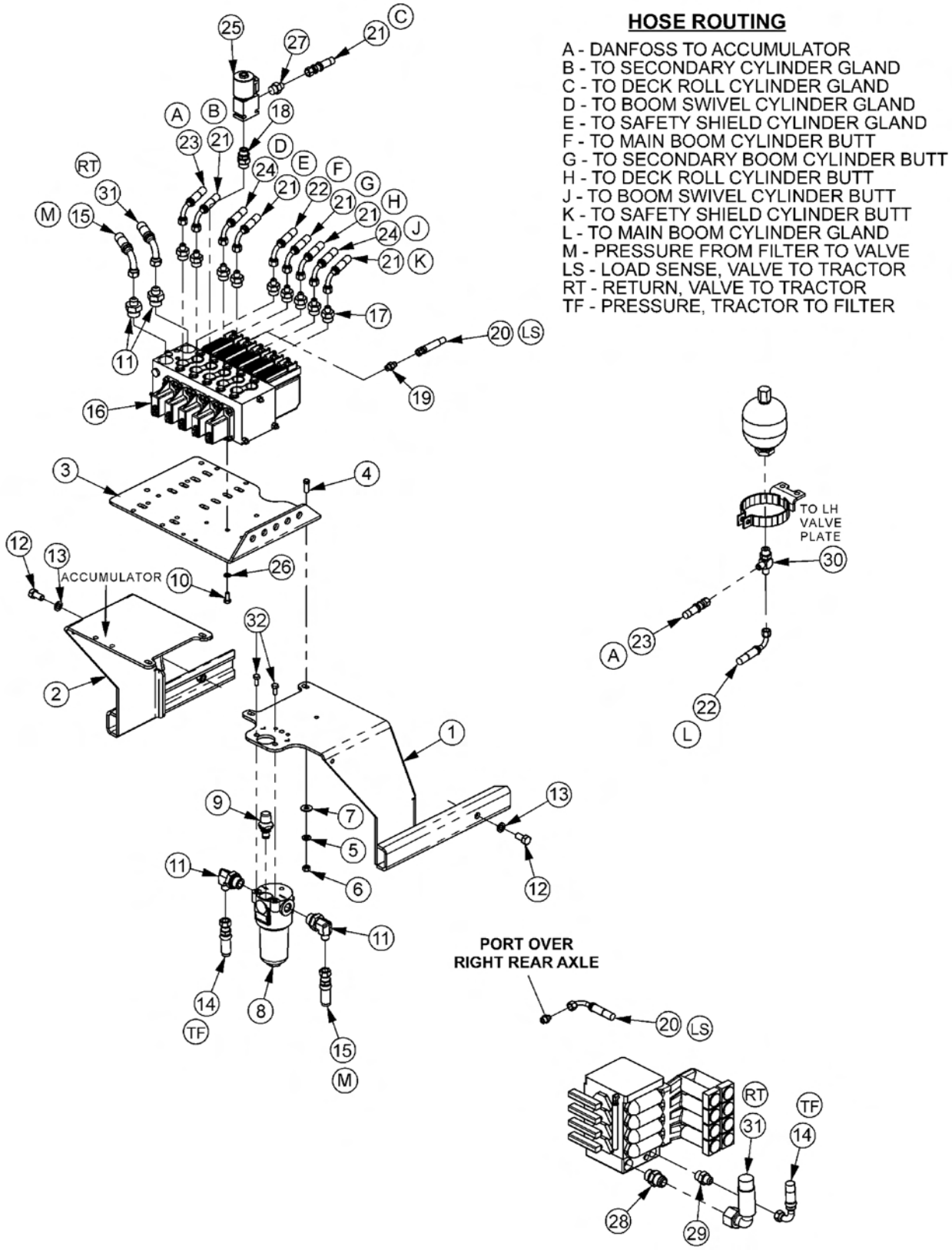

NH T6000 SABER

Continued...

ITEM	PART NO.	QTY.	DESCRIPTION
1	06340008	1	VLV MNT,RH
2	06340009	1	VLV MNT,LH
3	34622	1	PLATE,VALVE,REAR MNT
4	21631	4	CAPSCREW,3/8” X 1-1/4”,NC
5	21988	4	LOCKWASHER,3/8"
6	21625	4	HEX NUT,3/8",NC
7	22016	3	FLATWASHER,3/8"
8	06505029	1	FILTER,HP,3/4"SAE,VIS IND
---	06505039	1	ELEMENT,FILTER
9	06505081	1	INDICATOR,VIS,HP FILTER
10	21579	4	CAPSCREW,5/16" X 3/4",NC
11	33294	2	ELBOW,3/4"MOR X 1/2"MJ
12	21729	2	CAPSCREW,1/2" X 1",NC
13	21990	2	LOCKWASHER,1/2"
14	06500310	1	HOSE,1/2" X 19"
15	06500315	1	HOSE,1/2" X 39"
16	06502096	1	VLV,5SP,32PVG,RS
17	32807	9	ADAPTER,5/8"MOR X 3/8"MJ
18	31611	1	ADAPTER,5/8"MOR X 1/2"MOR ADJ
19	33419	1	ADAPTER,5/16"MOR X 1/4"MJ
20	06500270	1	HOSE,1/4" X 50"
21	06500370	6	HOSE,3/8" X 220"
22	06500371	2	HOSE,3/8" X 252"
23	06500324	1	HOSE,3/8" X 14"
24	06500321	2	HOSE,3/8" X 198"
25	06510050	1	TRV LCK,METRIPACK COIL
26	21987	4	LOCKWASHER,5/16"
27	33271	2	ADAPTER,1/2"MOR X 3/8"MJ
28	06503012	1	ADPTR,27MM MOR X 3/4"MJ
29	33463	1	ADPTR,22MM MOR X 1/2"MJ
30	34020	1	TEE,BRANCH,3/8"MJ X 1/2"MOR X 3/8"MJ
31	06500091	1	HOSE,1/2" X 26"
32	21579	2	CAPSCREW,5/16" X 3/4",NC

ELECTRONIC PROPORTIONAL LIFT VALVE - TERRAGLIDE

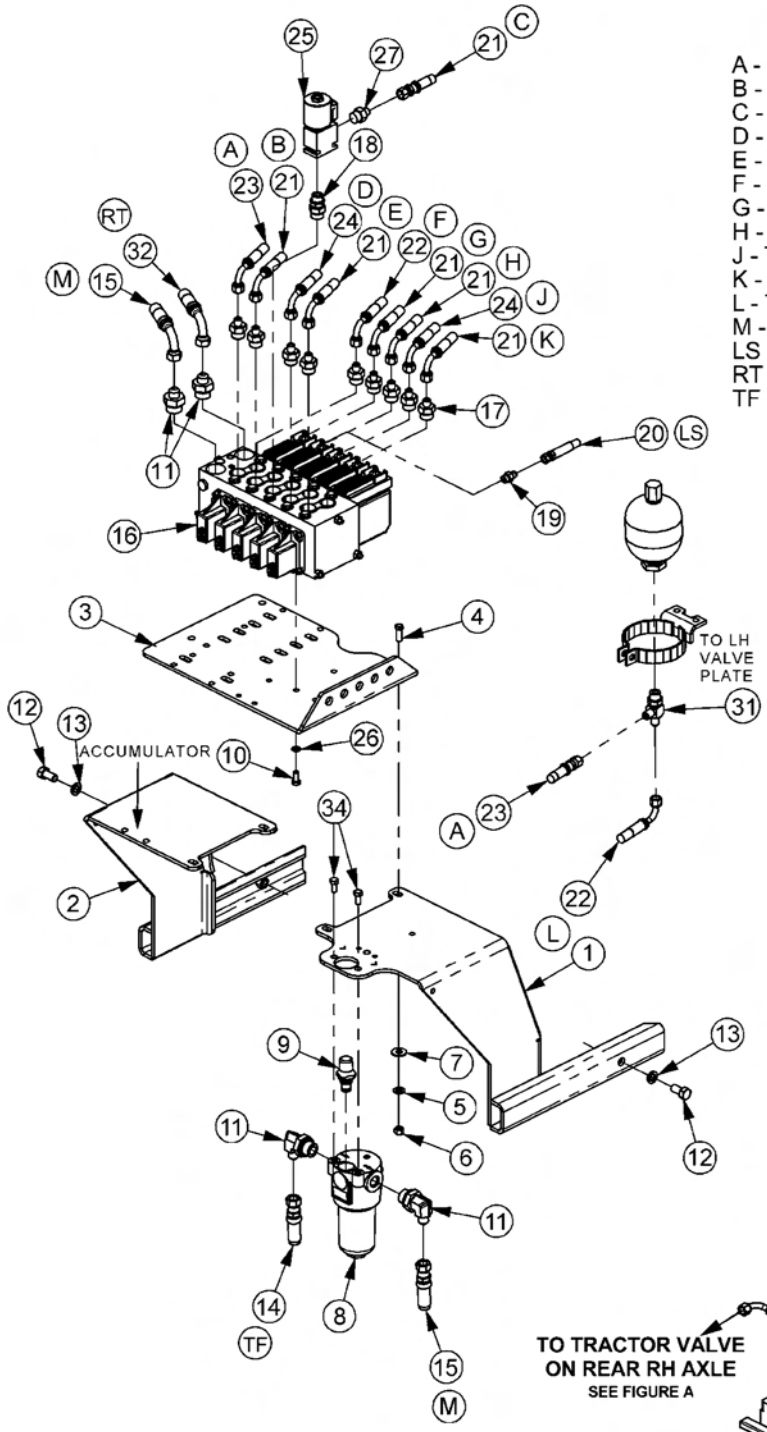

HOSE ROUTING

A - DANFOSS TO ACCUMULATOR
B - TO SECONDARY CYLINDER GLAND
C - TO DECK ROLL CYLINDER GLAND
D - TO BOOM SWIVEL CYLINDER GLAND
E - TO SAFETY SHIELD CYLINDER GLAND
F - TO MAIN BOOM CYLINDER BUTT
G - TO SECONDARY BOOM CYLINDER BUTT
H - TO DECK ROLL CYLINDER BUTT
J - TO BOOM SWIVEL CYLINDER BUTT
K - TO SAFETY SHIELD CYLINDER BUTT
L - TO MAIN BOOM CYLINDER GLAND
M - PRESSURE FROM FILTER TO VALVE
LS - LOAD SENSE, VALVE TO TRACTOR
RT - RETURN, VALVE TO TRACTOR
TF - PRESSURE, TRACTOR TO FILTER

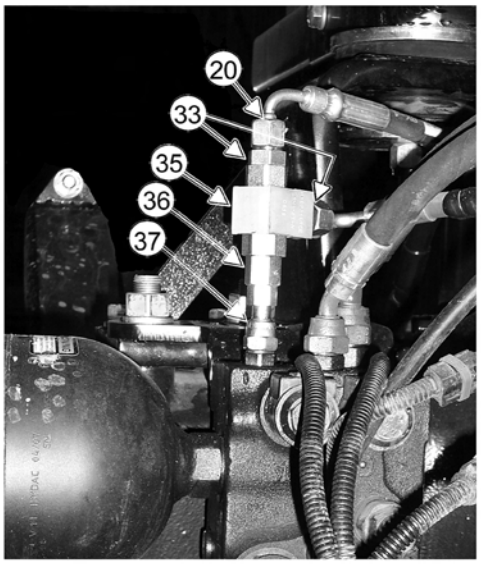

FIGURE A

Continued...

ITEM	PART NO.	QTY.	DESCRIPTION
1	06340008	1	VLV MNT,RH
2	06340009	1	VLV MNT,LH
3	34622	1	PLATE,VALVE,REAR MNT
4	21631	4	CAPSCREW,3/8” X 1-1/4”,NC
5	21988	4	LOCKWASHER,3/8"
6	21625	4	HEX NUT,3/8",NC
7	22016	3	FLATWASHER,3/8"
8	06505029	1	FILTER,HP,3/4"SAE,VIS IND
---	06505039	1	ELEMENT,FILTER
9	06505081	1	INDICATOR,VIS,HP FILTER
10	21579	4	CAPSCREW,5/16" X 3/4",NC
11	33294	2	ELBOW,3/4"MOR X 1/2"MJ
12	21729	2	CAPSCREW,1/2" X 1",NC
13	21990	2	LOCKWASHER,1/2"
14	06500310	1	HOSE,1/2" X 19"
15	06500315	1	HOSE,1/2" X 39"
16	06502096	1	VLV,5SP,32PVG,RS
17	32807	9	ADAPTER,5/8"MOR X 3/8"MJ
18	31611	1	ADAPTER,5/8"MOR X 1/2"MOR ADJ
19	33419	1	ADAPTER,5/16"MOR X 1/4"MJ
20	06500270	1	HOSE,1/4" X 50"
21	06500370	6	HOSE,3/8" X 220"
22	06500371	2	HOSE,3/8" X 252"
23	06500324	1	HOSE,3/8" X 14"
24	06500321	2	HOSE,3/8" X 198"
25	06510050	1	TRV LCK,METRIPACK COIL
26	21987	4	LOCKWASHER,5/16"
27	33271	2	ADAPTER,1/2"MOR X 3/8"MJ
28	06503012	1	ADPTR,27MM MOR X 3/4"MJ
29	33463	1	ADPTR,22MM MOR X 1/2"MJ
31	34020	1	TEE,BRANCH,3/8"MJ X 1/2"MOR X 3/8"MJ
32	06500091	1	HOSE,1/2" X 26"
33	06503093	2	ADAPTER,3/8"MOR X 1/4"MF
34	21579	2	CAPSCREW,5/16" X 3/4",NC
35	06503029	1	TEE,RUN,1/2"MOR X 3/8"MJ X 3/8"MJ
36	33391	1	ADAPTER,3/8"MOR X 1/4"FOR
37	06503094	1	ADAPTER,1/4"MOR X 1/4"FFSX

ELECTRONIC PROPORTIONAL LIFT VALVE - POWER BEYOND

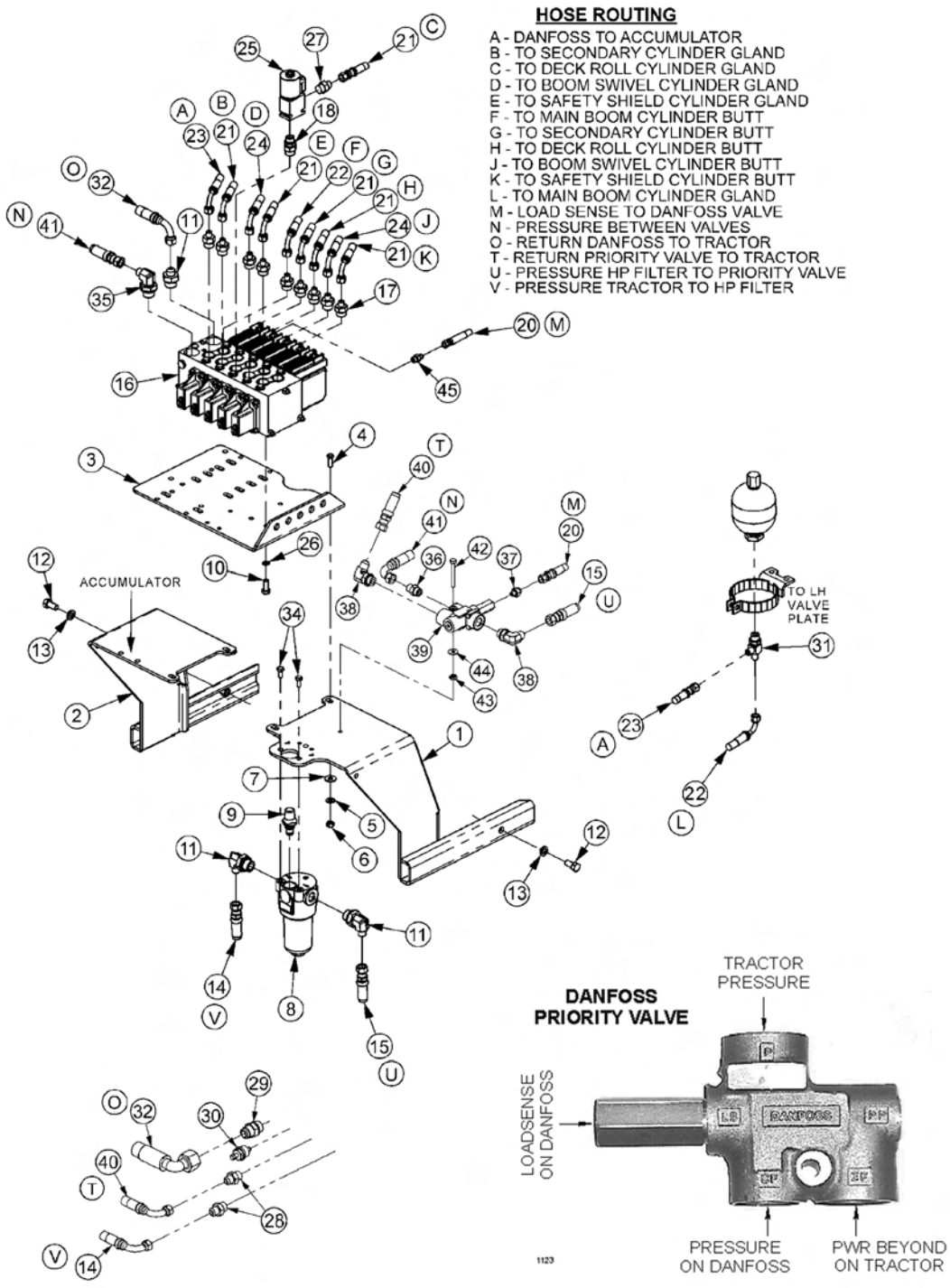

ITEM	PART NO.	QTY.	DESCRIPTION
1	06340008	1	VLV MNT,RH
2	06340009	1	VLV MNT,LH
3	34622	1	PLATE,VALVE,REAR MNT
4	21631	4	CAPSCREW,3/8” X 1-1/4”,NC

Continued...

ITEM	PART NO.	QTY.	DESCRIPTION
5	21988	4	LOCKWASHER,3/8"
6	21625	4	HEX NUT,3/8",NC
7	22016	4	FLATWASHER,3/8"
8	06505029	1	FILTER,HP,3/4"SAE,VIS IND
---	06505039	1	ELEMENT,FILTER
9	06505081	1	INDICATOR,VIS,HP FILTER
10	21579	4	CAPSCREW,5/16" X 3/4",NC
11	33294	2	ELBOW,3/4"MOR X 1/2"MJ
12	21729	2	CAPSCREW,1/2" X 1",NC
13	21990	2	LOCKWASHER,1/2"
14	06500310	1	HOSE,1/2" X 19"
15	06500255	1	HOSE,1/2" X 30"
16	06502096	1	VALVE,5 SPOOL
17	32807	9	ADAPTER,5/8"MOR X 3/8"MJ
18	31611	1	ADAPTER,5/8"MOR X 1/2"MOR ADJ
20	06500219	1	HOSE,3/8" X 48"
21	06500322	6	HOSE,3/8" X 238"
22	06500323	2	HOSE,3/8" X 270"
23	06500324	1	HOSE,3/8" X 14"
24	06500321	2	HOSE,3/8" X 198"
25	06510050	1	TRV LCK,METRIPACK COIL
26	21987	4	LOCKWASHER,5/16"
27	33271	3	ADAPTER,1/2"MOR X 3/8"MJ
28	33463	2	ADAPTER,22MM MOR X 1/2"MJ
29	06503012	1	ADPTR,27MM MOR X 3/4"MJ
30	F87372883	1	VALVE,PRIORITY,PB,NH
31	06503029	1	RUN TEE
32	06500063	1	HOSE,1/2" X 30"
34	21579	2	CAPSCREW,5/16" X 3/4",NC
35	33294	1	ELBOW,3/4"MOR X 1/2"MJ
36	33528	1	ADAPTER,1/2"MOR X 1/2"MJ
37	06503057	1	ADAPTER,1/4"MOR X 3/8"MJ
38	33383	2	ELBOW,5/8"MOR X 1/2"MJ
39	06502102	1	VALVE,PRIORITY,OLS80,10 BAR
40	06500203	1	HOSE,1/2" X 30"
41	34612	1	HOSE,1/2" X 34"
42	21586	1	CAPSCREW,5/16" X 2-1/2",NC
43	21577	1	NYLOCK NUT,5/16",NC
44	22015	1	FLATWASHER,5/16"
45	33419	1	ADAPTER,5/16"MOR X 1/4"MJ

ELECTRONIC PROPORTIONAL LIFT VALVE - OPEN CENTER

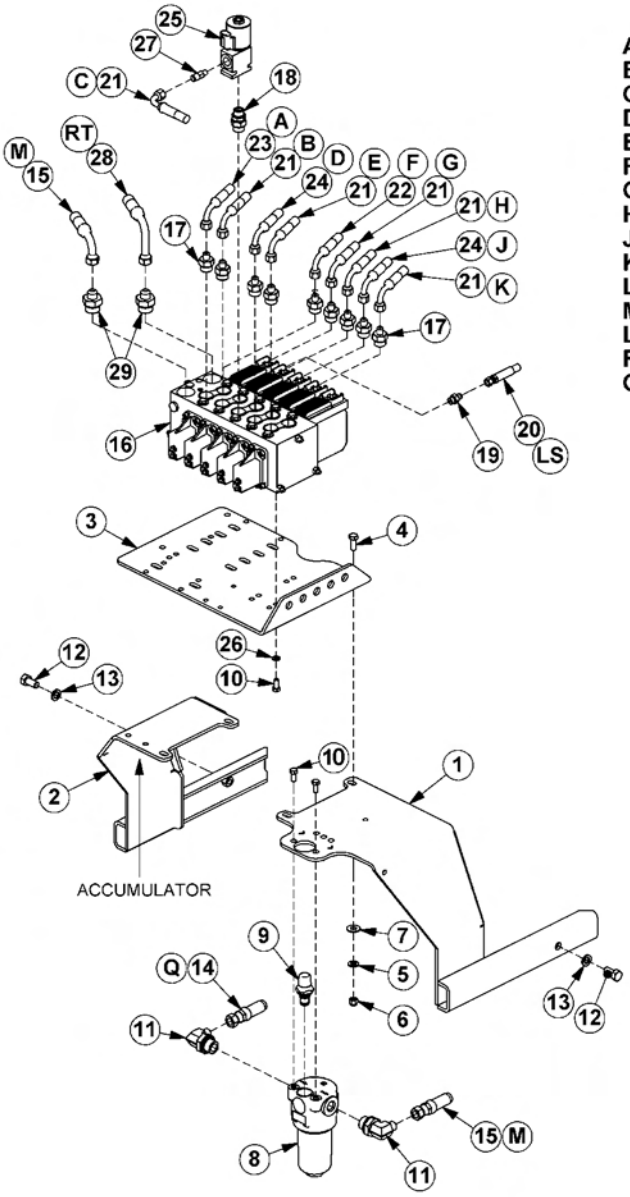

HOSE ROUTING

A - LIFT VALVE TO ACCUMULATOR
B - TO SECONDARY CYLINDER GLAND
C - TO DECK ROLL CYLINDER GLAND
D - TO BOOM SWIVEL CYLINDER GLAND
E - TO SAFETY SHIELD CYLINDER GLAND
F - TO MAIN BOOM CYLINDER GLAND
G - TO SECONDARY CYLINDER BUTT
H - TO DECK ROLL CYLINDER BUTT
J - TO BOOM SWIVEL CYLINDER BUTT
K - TO SAFETY SHIELD CYLINDER BUTT
L - TO MAIN BOOM CYLINDER GLAND
M - PRESSURE FROM FILTER TO LIFT VALVE
LS - LOAD SENSE, LIFT VALVE TO TRACTOR
RT - RETURN, LIFT VALVE TO TRACTOR
Q - FROM CHECK VALVE TO FILTER INLET

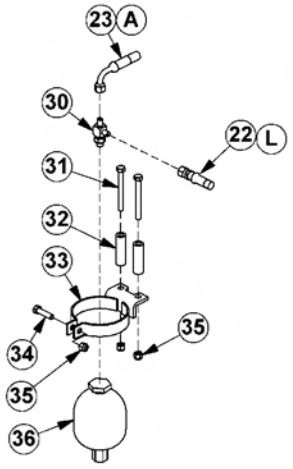

NH T6000 SABER

Continued...

ITEM	PART NO.	QTY.	DESCRIPTION
1	06340008	1	VLV MNT,RH
2	06340009	1	VLV MNT,LH
3	34622	1	PLATE,VALVE,REAR MNT
4	21631	4	CAPSCREW,3/8” X 1-1/4”,NC
5	21988	4	LOCKWASHER,3/8"
6	21625	4	HEX NUT,3/8",NC
7	22016	3	FLATWASHER,3/8"
8	06505029	1	FILTER,HP,3/4"SAE,VIS IND
---	06505039	1	ELEMENT,FILTER
9	06505081	1	INDICATOR,VIS,HP FILTER
10	21579	6	CAPSCREW,5/16" X 3/4",NC
11	33294	2	ELBOW,3/4"MOR X 1/2"MJ
12	21729	2	CAPSCREW,1/2" X 1",NC
13	21990	2	LOCKWASHER,1/2"
14	06500583	1	HOSE,1/2" X 16"
15	06500315	1	HOSE,1/2" X 39"
16	06502096	1	VLV,5SP,32PVG,RS
17	32807	9	ADAPTER,5/8"MOR X 3/8"MJ
18	31611	1	ADAPTER,5/8"MOR X 1/2"MOR ADJ
19	33419	1	ADAPTER,5/16"MOR X 1/4"MJ
20	06500270	1	HOSE,1/4" X 50"
21	06500370	6	HOSE,3/8" X 220"
22	06500371	2	HOSE,3/8" X 252"
23	06500324	1	HOSE,3/8" X 14"
24	06500321	2	HOSE,3/8" X 198"
25	06510050	1	TRV LCK,METRIPACK COIL
26	21987	4	LOCKWASHER,5/16"
27	33271	2	ADAPTER,1/2"MOR X 3/8"MJ
28	06500091	1	HOSE,1/2" X 26"
29	33591	2	ADAPTER,3/4"MOR X 1/2"MJ
30	34020	1	TEE,BRANCH,3/8"MJ X 1/2"MOR X 3/8"MJ
31	21640	2	CAPSCREW,3/8" X 3-1/2",NC
32	06420054	2	SPACER
33	23888	1	BRACKET,ACCUMULATOR
34	21632	1	CAPSCREW,3/8" X 1-1/2",NC
35	21627	3	NYLOCK NUT,3/8",NC
36	24300	1	ACCUMULATOR

BEHIND BATTERY BOX

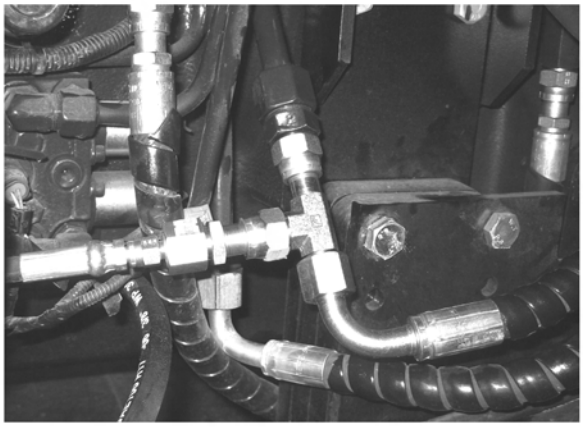

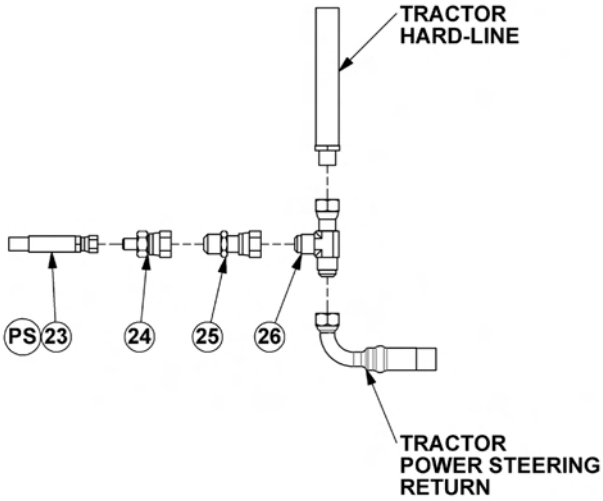

HOSE ROUTING

N - TRACTOR PRESSURE TO CHECK VALVE #1
Q - TO FILTER INLET
PS - POWER STEERING RETURN TO CHECK VALVE #2
LS - LOAD SENSE, LIFT VALVE TO TRACTOR
RT - RETURN, LIFT VALVE TO TRACTOR

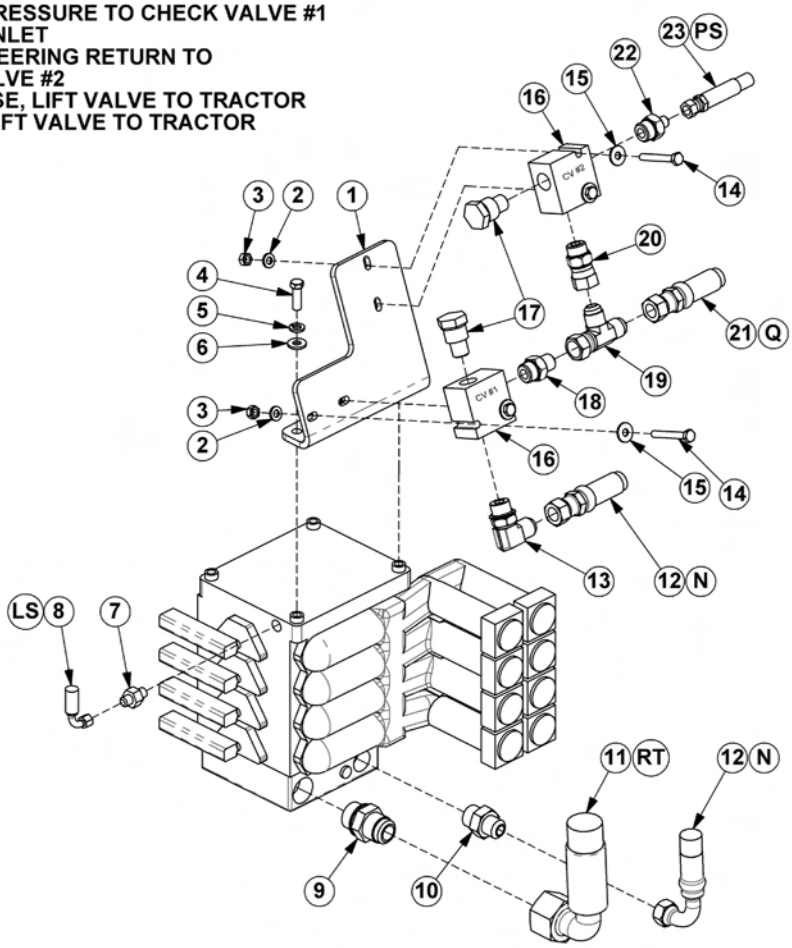

TRACTOR REMOTES

Continued...

ITEM	PART NO.	QTY.	DESCRIPTION
1	06410171	1	PLATE,MOUNT
2	21986	4	LOCKWASHER,1/4"
3	21525	4	HEX NUT,1/4",NC
4	28583	2	CAPSCREW,8MM X 25MM,1.25P
5	6T2619	2	LOCKWASHER,8MM
6	34948	2	FLATWASHER,8MM
7	06503002	1	ADAPTER,12MM MOR X 5/16"MJ
8	06500092	1	HOSE,1/4" X 12"
9	06503012	1	ADAPTER,27MM MOR X 3/4"MJ
10	33463	1	ADAPTER,22MM MOR X 1/2"MJ
11	06500091	1	HOSE,1/2" X 26"
12	06500310	1	HOSE,1/2" X 19"
13	33382	1	ELBOW,1/2"MOR X 1/2"MJ
14	21534	4	CAPSCREW,1/4" X 2",NC
15	22014	4	FLATWASHER,1/4"
16	06502005	2	BODY,VALVE
17	06502006	2	CHECK VALVE
18	33528	1	ADAPTER,1/2"MOR X 1/2"MJ
19	6T3992	1	TEE,RUN,1/2"MJ X 1/2"FJX X 1/2"MJ
20	06503019	1	ADAPTER,1/2"MOR X 1/2"FJ
21	06500583	1	HOSE,1/2" X 16"
22	32899	1	ADAPTER,1/4"MJ X 1/2"MOR
23	06500120	1	HOSE,1/4" X 80"
24	06503021	1	ADAPTER,1/4"MJ X 1/2"FJ
25	06503020	1	ADAPTER,1/2"MJ X 1/2"FFX
26	34018	1	TEE,RUN,1/2"MF X 1/2"MF X 1/2"FF

MIRROR BRACKET

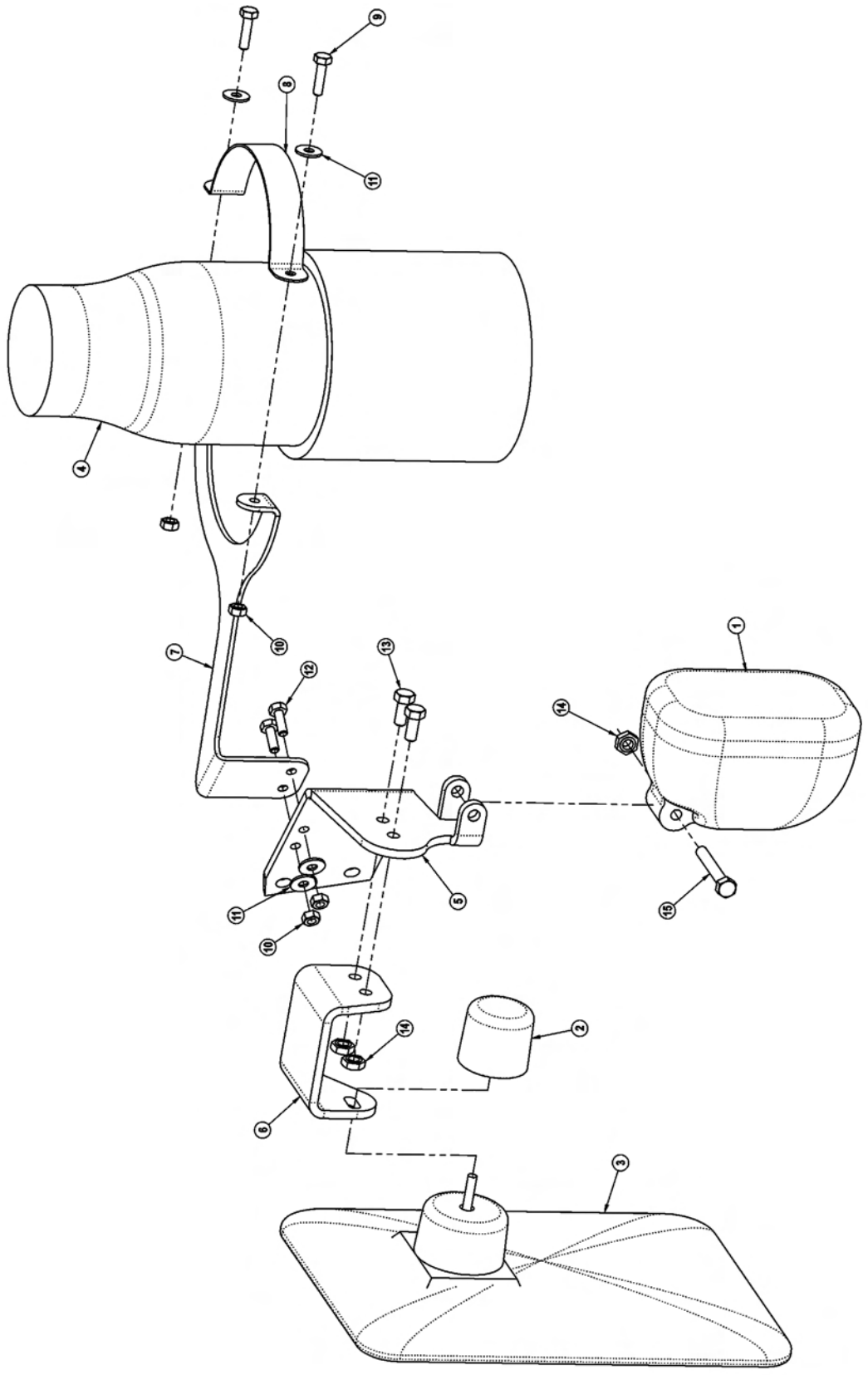

NH T6000 SABER

MIRROR BRACKET

Continued...

ITEM	PART NO.	QTY.	DESCRIPTION
1	------	1	WORK LIGHT
2	------	1	KNOB T6010
3	------	1	MIRROR
4	------	1	EXHAUST
5	06370008	1	MNT,MIRROR/LIGHT
6	06410633	1	MNT,MIRROR
7	06410141	1	COLLAR,EXHAUST
8	06410142	1	COLLAR,CLAMP,EXHAUST
9	21530	2	CAPSCREW,1/4" X 1",NC
10	21525	4	HEX NUT,1/4",NC
11	22014	4	FLATWASHER,1/4"
12	21529	2	CAPSCREW,1/4" X 3/4",NC
13	21580	2	CAPSCREW,5/16 X 1,NC
14	21577	3	NYLOCK NUT,5/16",NC
15	21585	1	CAPSCREW,5/16” X 2-1/4”,NC

POLYCARBONATE SAFETY WINDOW

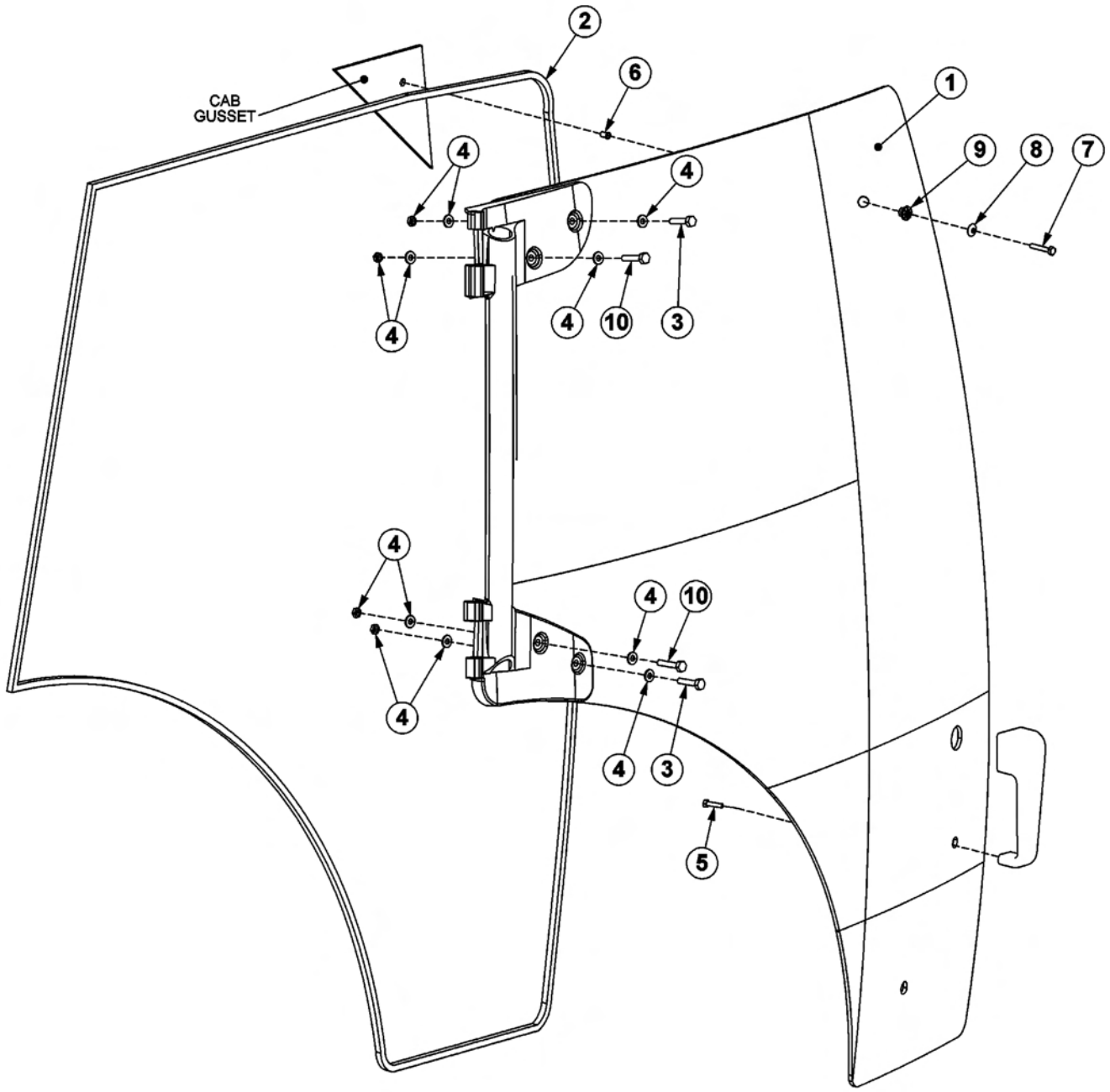

NH T6000 SABER

POLYCARBONATE SAFETY WINDOW

Continued...

ITEM	PART NO.	QTY.	DESCRIPTION
1	06490037	1	POLYCARBONATE,DOOR,RH
2	31965	17	TRIM SEAL,3/8"CLIP X 3/4"OD BULB (IN FEET)
3	06530502	2	CAPSCREW,8MM X 40MM,1.25P,GR8
4	------	-	EXISTING HARDWARE
5	06530501	1	CAPSCREW,6MM X 25MM,1.0P,GR8
6	06537006	1	THREADED INSERT,1/4" X 1/2",NC
7	21532	1	CAPSCREW,1/4" X 1-1/2",NC
8	06537001	1	WASHER RUBBERIZED
9	35234	1	GROMET,RIBBED,1/2"OD X 1/4"ID X 1/2"
10	6T2494	2	CAPSCREW,8MM X 45MM,1.25P,GR8
---	06537005	1	ADHESIVE,WTHR STRP (NOT SHOWN)

EXHAUST MOUNT - 6 CYLINDER

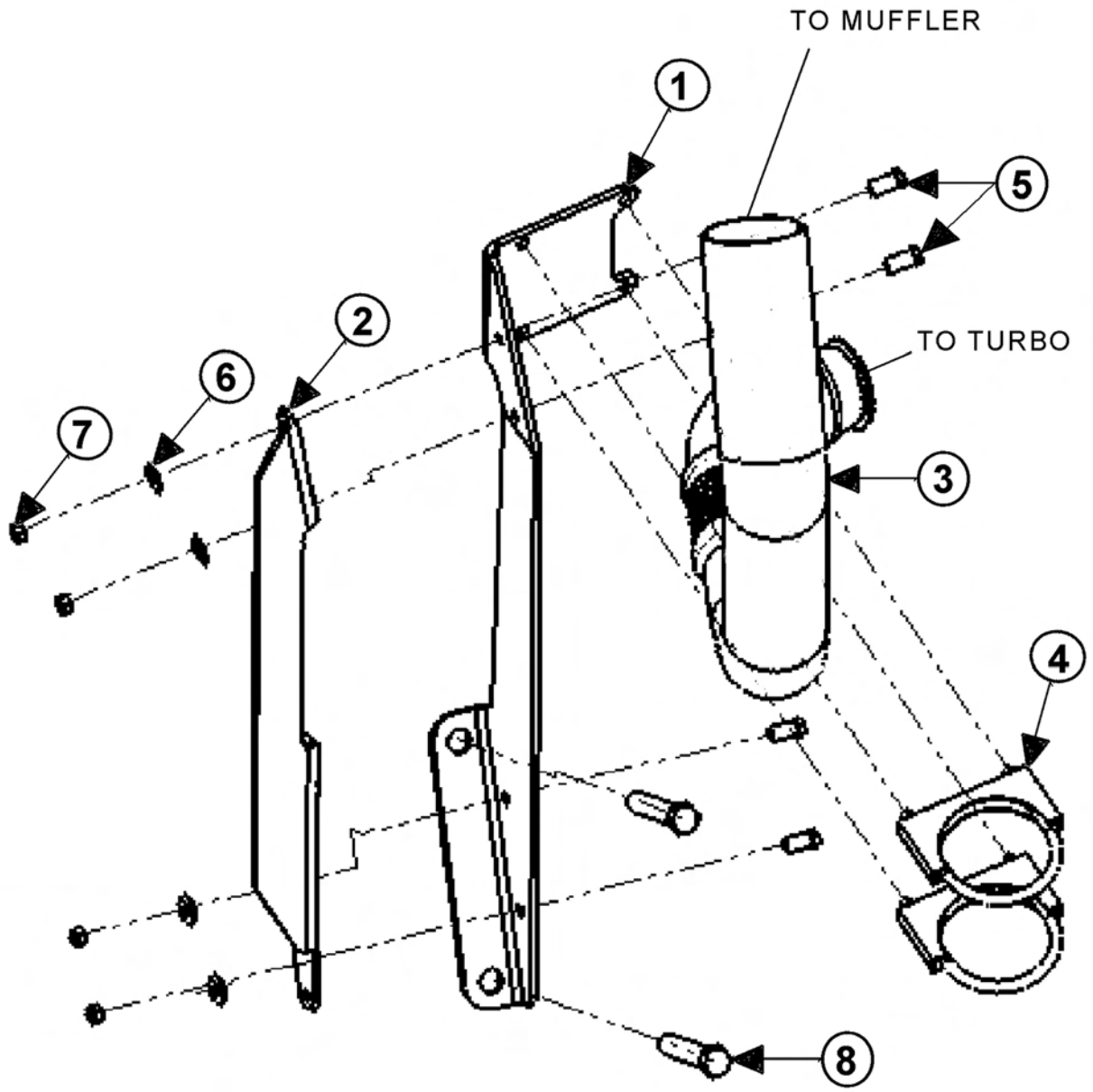

ITEM	PART NO.	QTY.	DESCRIPTION
1	06410113	1	MNT,EXHAUST
2	06410121	1	MNT,EXHAUST,SUPPORT
3	06520023	1	TUBE,EXHAUST RELOCATE,6CYL
4	32986	2	CLAMP,EXHAUST,3-1/2"
5	21630	4	CAPSCREW,3/8" X 1",NC
6	21988	4	LOCKWASHER,3/8"
7	21625	4	HEX NUT,3/8",NC
8	------	2	EXISTING MAINFRAME HARDWARE

NH T6000 SABER

BOOMREST ASSEMBLY - SABER

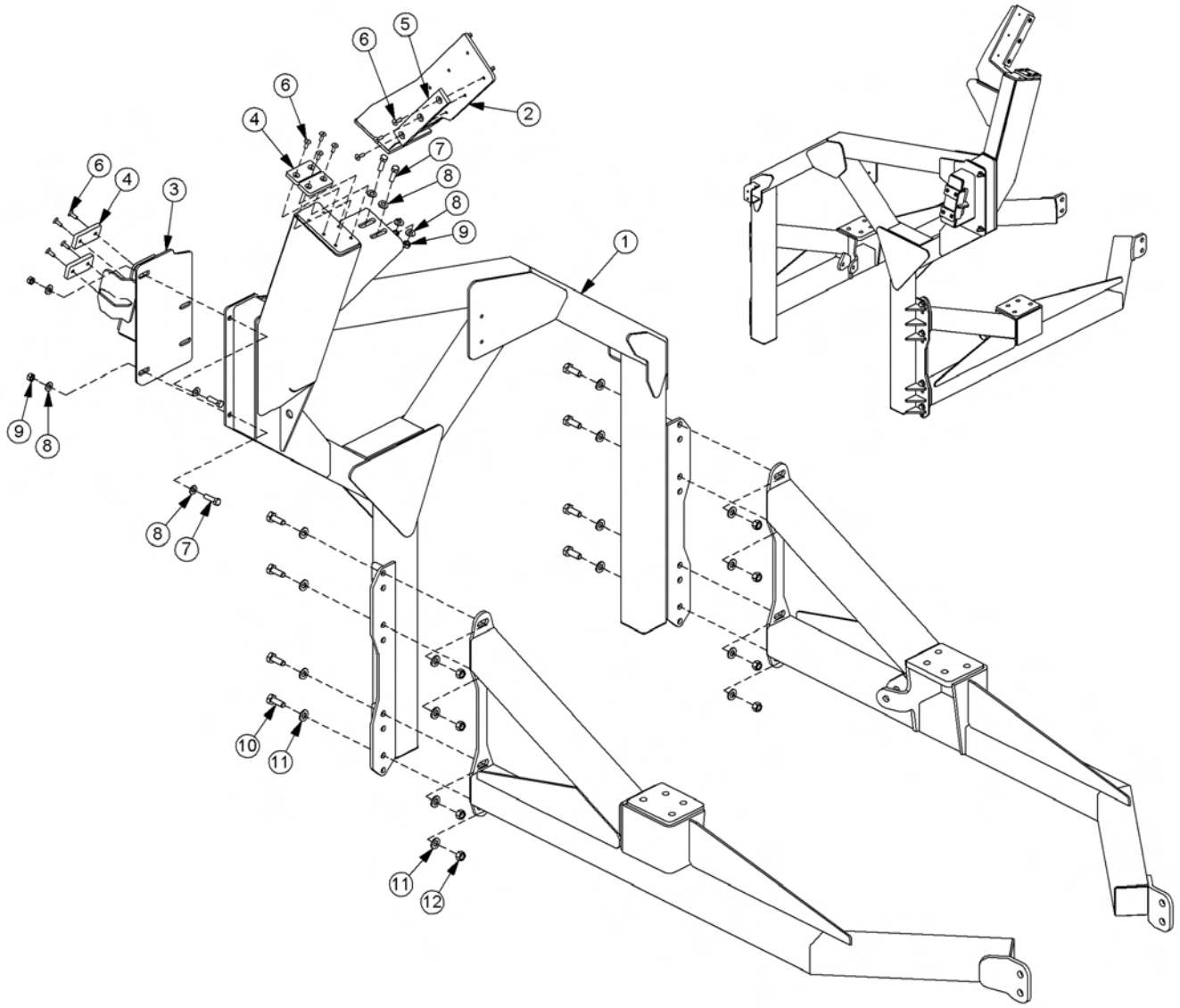

ITEM	PART NO.	QTY.	DESCRIPTION
1	06310071	1	BMRST,ASSY,SABER
2	06310090	1	STOP,UPPER,SBR
3	06310091	1	STOP,LOWER,SBR
4	06520078	4	BUMPER,PAD,SHORT
5	32686	1	BUMPER,PAD,LONG
6	28734	11	CAPSCREW,3/8" X 1",NC
7	6T1027	8	CAPSCREW,1/2" X 1-3/4",NC
8	06533004	16	FLATWASHER,1/2",NC
9	31580	8	HEX NUT,1/2",NC
10	21782	8	CAPSCREW,5/8" X 1-3/4",NC
11	33764	16	FLATWASHER,5/8",SAE
12	21777	8	NYLOCK NUT,5/8",NC

NH T6000 SABER

BOOMREST ASSEMBLY - SABER MB

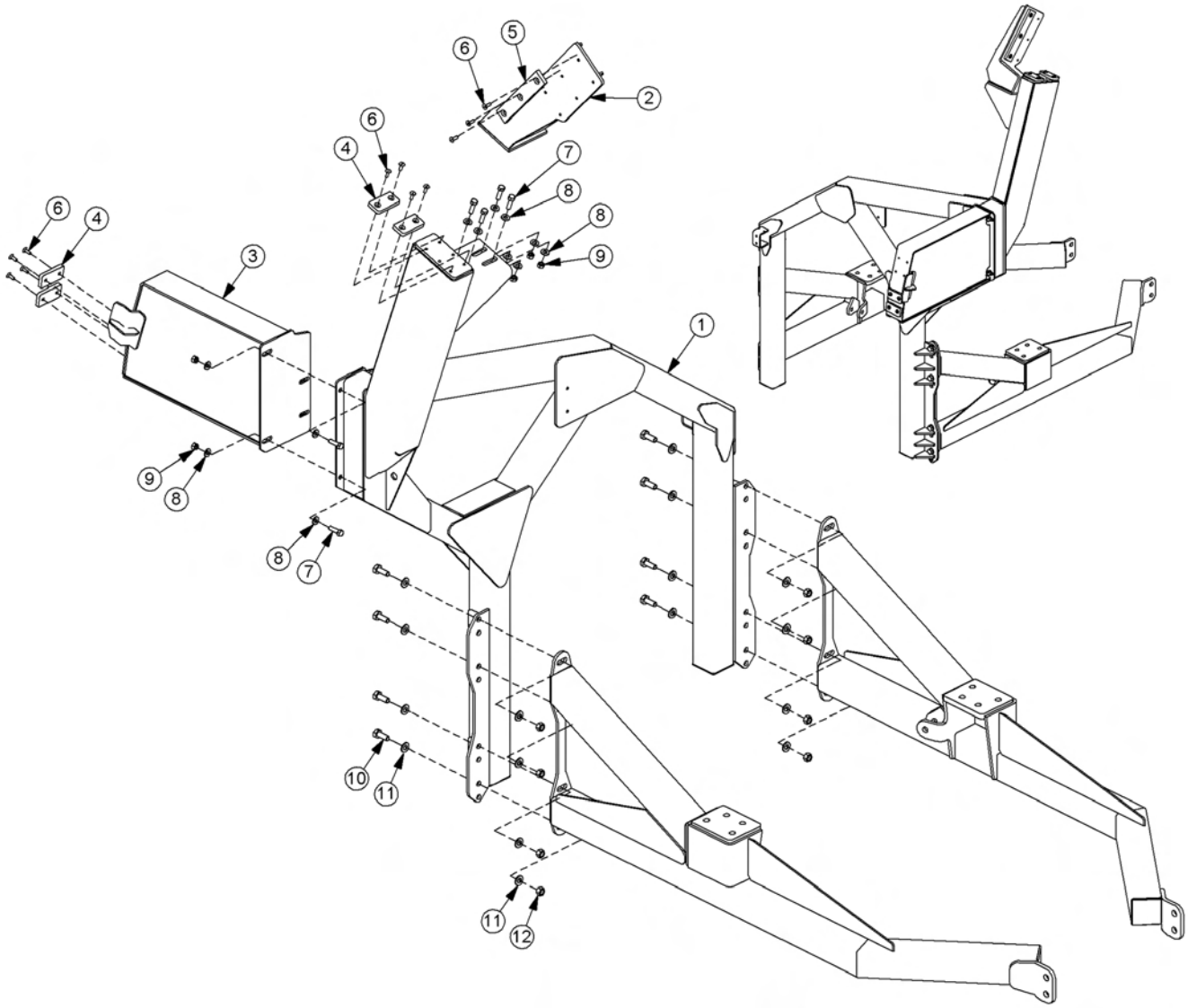

ITEM	PART NO.	QTY.	DESCRIPTION
1	06310092	1	BMRST,ASSY,SABER MB
2	06310090	1	STOP,UPPER,SBR
3	06310060	1	STOP,LOWER,SBR MB
4	06520078	4	BUMPER,PAD,SHORT
5	32686	1	BUMPER,PAD,LONG
6	28734	11	CAPSCREW,3/8" X 1",NC
7	6T1027	8	CAPSCREW,1/2" X 1-3/4",NC
8	06533004	16	FLATWASHER,1/2",NC
9	31580	8	HEX NUT,1/2",NC
10	21782	8	CAPSCREW,5/8" X 1-3/4",NC
11	33764	16	FLATWASHER,5/8",SAE
12	21777	8	NYLOCK NUT,5/8",NC

NH T6000 SABER

BOOMREST ASSEMBLY - SABER XB

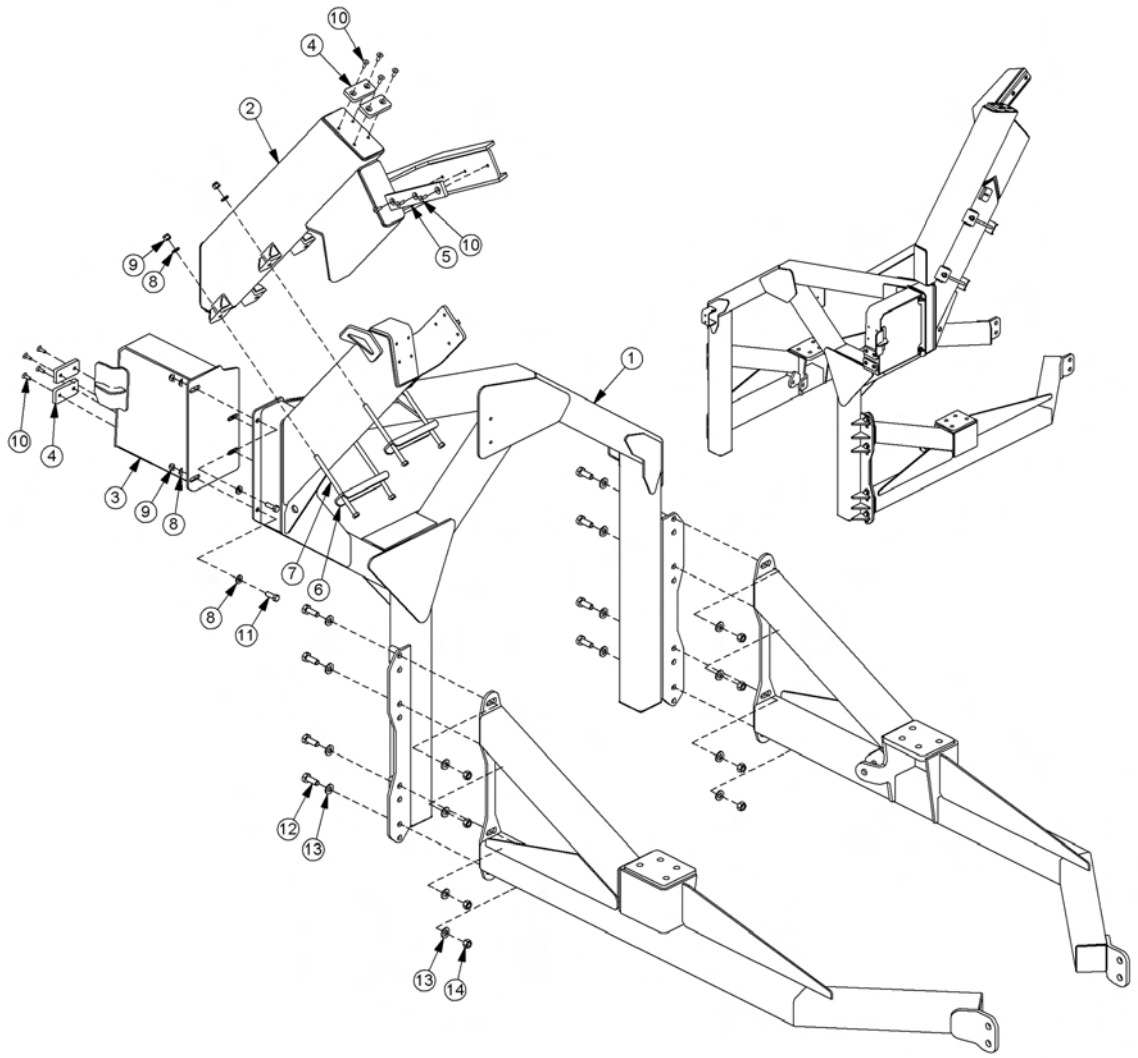

ITEM	PART NO.	QTY.	DESCRIPTION
1	06310035	1	BOOMREST,BASE
2	06310053	1	BOOMREST,UPPER
3	06310054	1	BOOMREST,LOWER
4	06520078	4	WEARPAD,SHORT,BOOMREST
5	32686	1	WEARPAD,LONG,BOOMREST
6	06410587	2	CHANNEL,TIE DOWN
7	21747	4	CAPSCREW,1/2" X 9",NC
8	22004	12	FLATWASHER,1/2",NARROW
9	21727	8	NYLOCK NUT,1/2",NC
10	28734	11	CAPSCREW,FLT/SKT HD,3/8" X 1",NC
11	21731	4	CAPSCREW,1/2" X 1-1/2",NC
12	21782	8	CAPSCREW,5/8" X 1-3/4",NC
13	33764	16	FLATWASHER,5/8",SAE
14	21777	8	NYLOCK NUT,5/8",NC

NH T6000 SABER

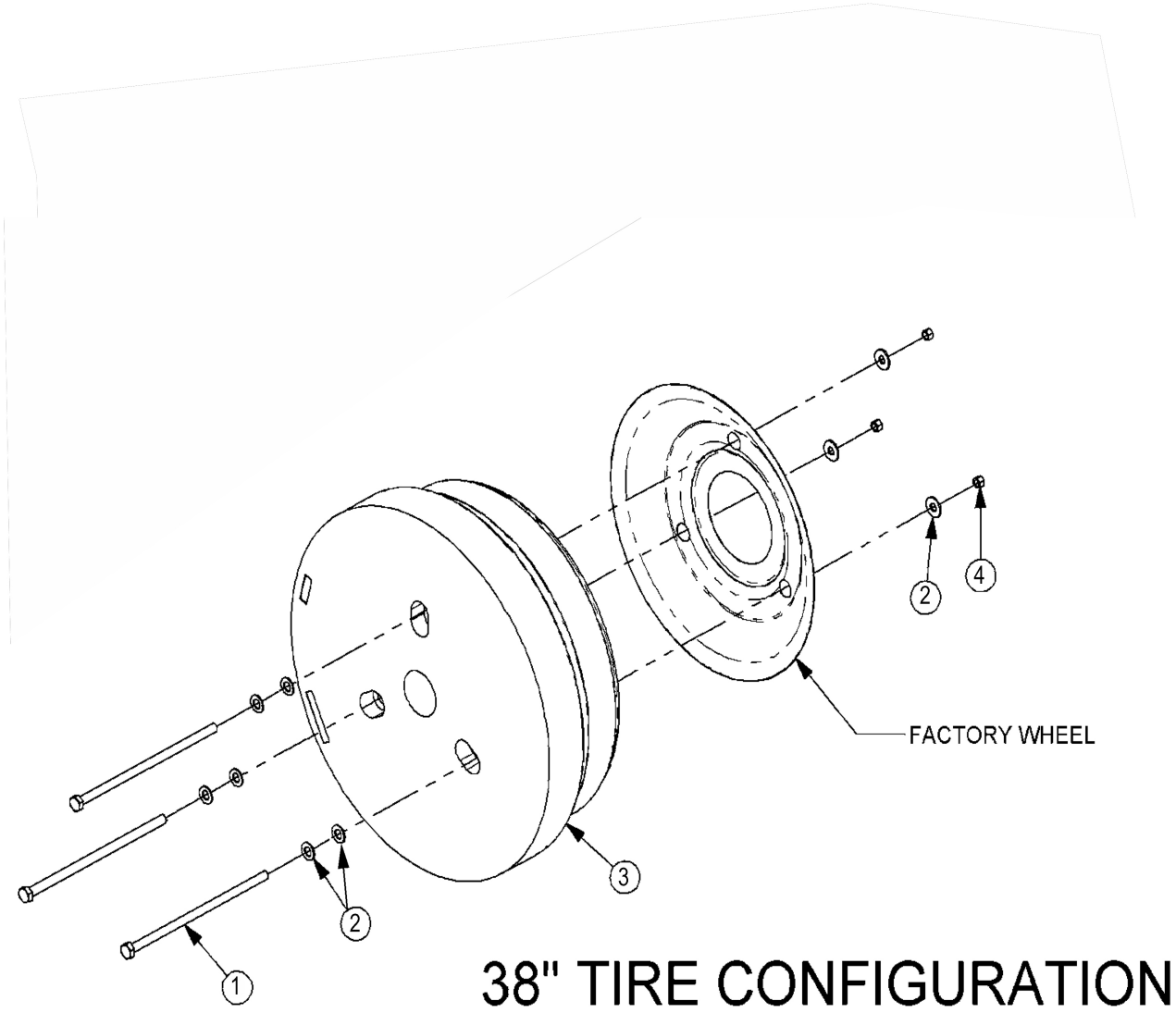

NH T6000 SABER

Continued...

ITEM	PART NO.	QTY.	DESCRIPTION
1	06530227	3	CAPSCREW, 1" X 19-1/2",NC
2	06533007	9	FLATWASHER, 1"
3	06499010	1	3400# WEIGHT
4	31581	3	HEX NUT,1",NC

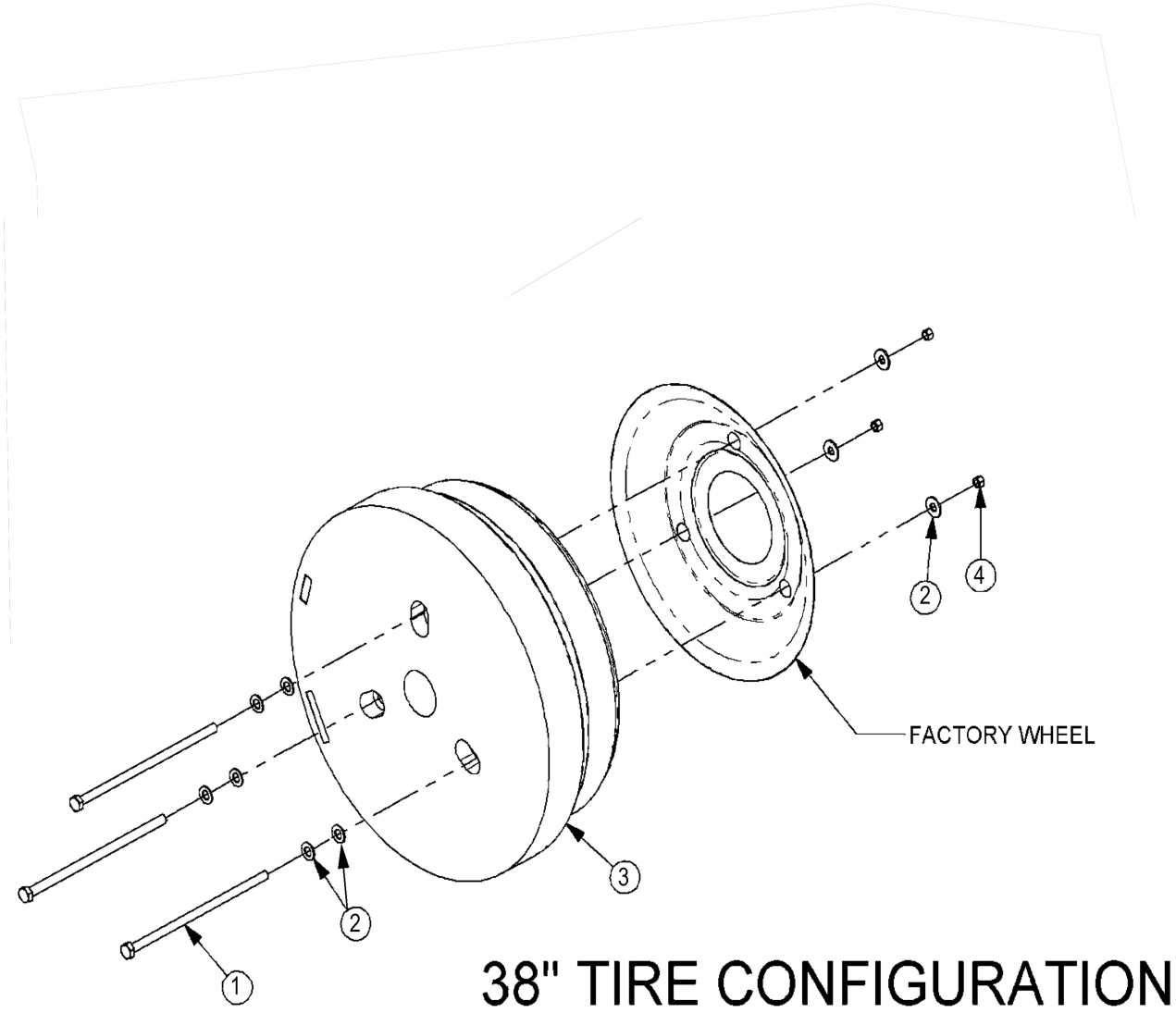

NH T6000 SABER

Continued...

ITEM	PART NO.	QTY.	DESCRIPTION
1	21842	3	CAPSCREW,3/4" X 5",NC
2	33626	3	FLATWASHER,3/4",USS
3	32518	1	850# WEIGHT
4	06370223	3	SPACER,WHEEL WEIGHT
5	06530227	3	CAPSCREW, 1" X 19-1/2",NC
6	06533007	9	FLATWASHER, 1"
7	06700108	1	3400# WEIGHT,TAPPED
8	31581	3	HEX NUT, 1",NC

NOTES

PARTS SECTION

NOTES

PART NAME INDEX

COMMON SABER

PART NAME INDEX

The following instructions are offered to help eliminate needless delay and error in processing purchase orders for the equipment in this manual.

1. The Parts Section is prepared in logical sequence and grouping of parts that belong to the basic machine featured in this manual. Part Numbers and Descriptions are given to help locate the parts and quantities required.

2. The Purchase Order must indicate the **Name and Address** of the person or organization ordering the parts, **who should be charged**, and if possible, the **serial number of the machine** for which the parts are being ordered.

3. The purchase order must clearly list the **quantity of each part**, the complete and correct **part number**, and the basic **name of the part**.

4. The manufacturer reserves the right to substitute parts where applicable.

5. Some parts may be unlisted items which are special production items not normally stocked and are subject to special handling. Request a quotation for such parts before sending a purchase order.

6. The manufacturer reserves the right to change prices without prior notice.

NOTE: When ordering replacement decals, refer to the part numbers and descriptions listed in the safety section in the front of this manual.

1000

For maximum safety and to guarantee optimum product reliability, always use genuine **Tiger** replacement parts. The use of inferior replacement parts may cause premature or catastrophic failure which could result in serious injury or death.

Direct any questions regarding parts to:

Tiger Corporation
3301 N. Louise Ave.
Sioux Falls, SD 57107
1-800-843-6849
1-605-336-7900

BOOM SWIVEL ASSEMBLY

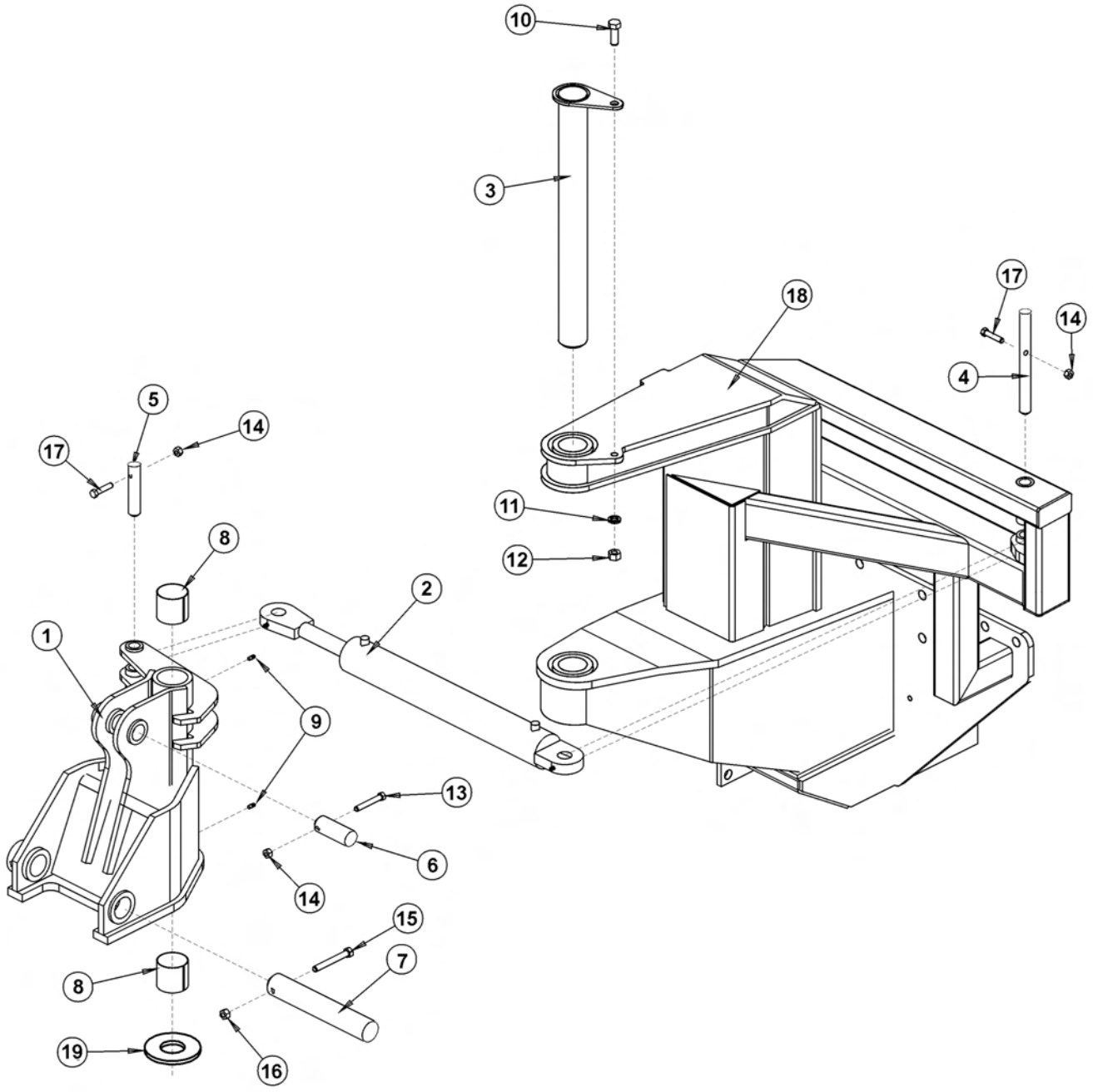

COMMON SABER

BOOM SWIVEL ASSEMBLY

Continued...

ITEM	PART NO.	QTY.	DESCRIPTION
---	32742	1	SWIVEL W/BUSHINGS,BOOM,SABER
1	32376	1	SWIVEL,BOOM,SABER,W/O BUSHING
2	33705	1	CYLINDER,3X17 1/2,WELDED
3	32381	1	PIN,2 1/2,SWIVEL,SABER
4	33710	1	PIN,CYLINDER,1,SWIVEL,SABER
5	32380	1	PIN,CYL,1,SWIVEL,SABER
6	32372	1	PIN,CYLINDER,STAGE,2ND
7	32378	1	PIN,BOOM TO SWIVEL,SABER
8	32322	2	BEARING,DX,2 1/2X2 1/2LONG,
9	6T3211	2	GREASE ZERK,1/8
10	21782	1	CAPSCREW,5/8 X 1-3/4 NC
11	21992	1	LOCKWASHER,5/8
12	21775	1	HEX NUT,5/8 NC
13	21687	1	CAPSCREW,7/16 X 3 NC
14	21677	3	NYLOCK NUT,7/16 NC
15	21741	1	CAPSCREW,1/2 X 4 NC
16	21727	1	NYLOCK NUT,1/2 NC
17	21683	2	CAPSCREW,7/16 X 2 NC
18	------	-	MAIN FRAME - REFER TO MAIN FRAME PARTS
19	06520250	1	BEARING, WASHER

COMMON SABER

QUICK COUPLERS

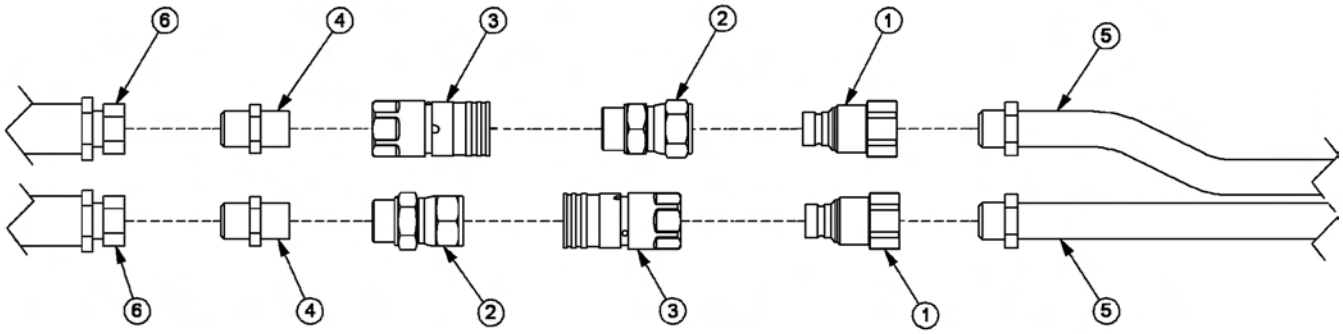

COMMON SABER

Continued...

ITEM	PART NO.	QTY.	DESCRIPTION
1	34392	2	ADAPTER,1ORBX1FJX
2	06503028	2	QUICK COUPLER,1”SAE,MALE,FLAT
3	06503027	2	QUICK COUPLER,1”SAE,FEM,FLAT
4	33555	2	ADAPTER,1MORBX1MJIC
5	------	-	PREFORMED TUBES - REFER TO BOOM ARM PARTS
6	------	-	#16 HOSE - REFER TO HYDRAULICS PARTS

SABER BOOM ASSEMBLY

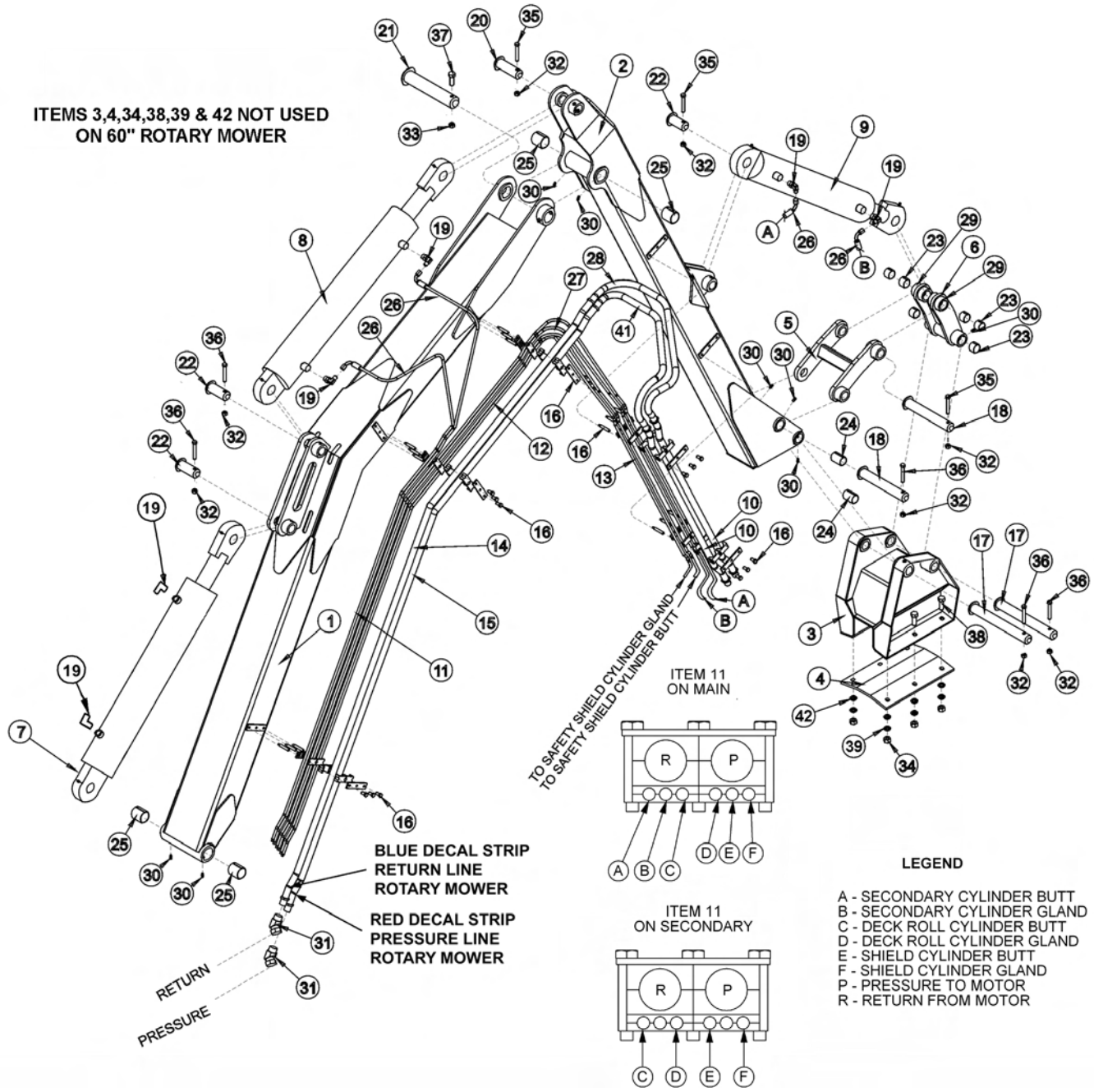

ITEM	PART NO.	QTY.	DESCRIPTION
1	32743	1	MAIN BOOM W/BEARING
2	32744	1	SECONDARY BOOM W/BEARING
3	32311	1	MOUNT,SWIVEL HEAD
4	32309	1	MOUNT HEAD PLATE
5	32316	1	LINKAGE,BOOM TO CYLINDER
6	32745	1	LINKAGE W/BEARING,CYLINDER TO SWIVEL

COMMON SABER

Continued...

ITEM	PART NO.	QTY.	DESCRIPTION
7	32363	1	CYLINDER,5" X 25"
8	32364	1	CYLINDER,4-1/2" X 26-1/2"
9	32365	1	CYLINDER,4" X 15"
10	33542	2	PREFORMED TUBE,1”
11	32627	2	PREFORMED TUBE,3/8”
12	32628	4	PREFORMED TUBE,3/8”
13	32629	4	PREFORMED TUBE,3/8”
14	33541	1	PREFORMED TUBE,1” (ROTARY RETURN)
15	33540	1	PREFORMED TUBE,1” (ROTARY PRESSURE)
16	33215	5	TUBE CLAMP KIT
17	32313	2	PIN
18	32319	2	PIN
19	32810	6	ELBOW
20	32372	1	PIN
21	32374	1	PIN
22	32375	3	PIN
23	32318	6	BEARING
24	32321	4	BEARING
25	32362	4	BEARING
26	32818	4	HOSE,3/8” X 24”
27	32680	4	HOSE,3/8” X 43”
28	33544	1	HOSE,1” X 40”
29	6T3207	6	GREASE ZERK
30	6T3211	8	GREASE ZERK
31	24724	2	SWIVEL
32	21677	8	NYLOCK NUT,7/16",NC
33	21727	1	NYLOCK NUT,1/2",NC
34	6T2408	6	HEX NUT,5/8",NC
35	21687	3	CAPSCREW,7/16" X 3",NC
36	21688	5	CAPSCREW,7/16" X 3-1/4",NC
37	21741	1	CAPSCREW,1/2" X 4",NC
38	6T2290	6	CAPSCREW,5/8" X 2",NC
39	21992	6	LOCKWASHER,5/8"
40	35260	1	HOSE COVER (NOT SHOWN)
41	33543	1	HOSE,1” X 39”
42	25270	12	FLATWASHER,5/8”,USS

COMMON SABER

SABER MB BOOM ASSEMBLY

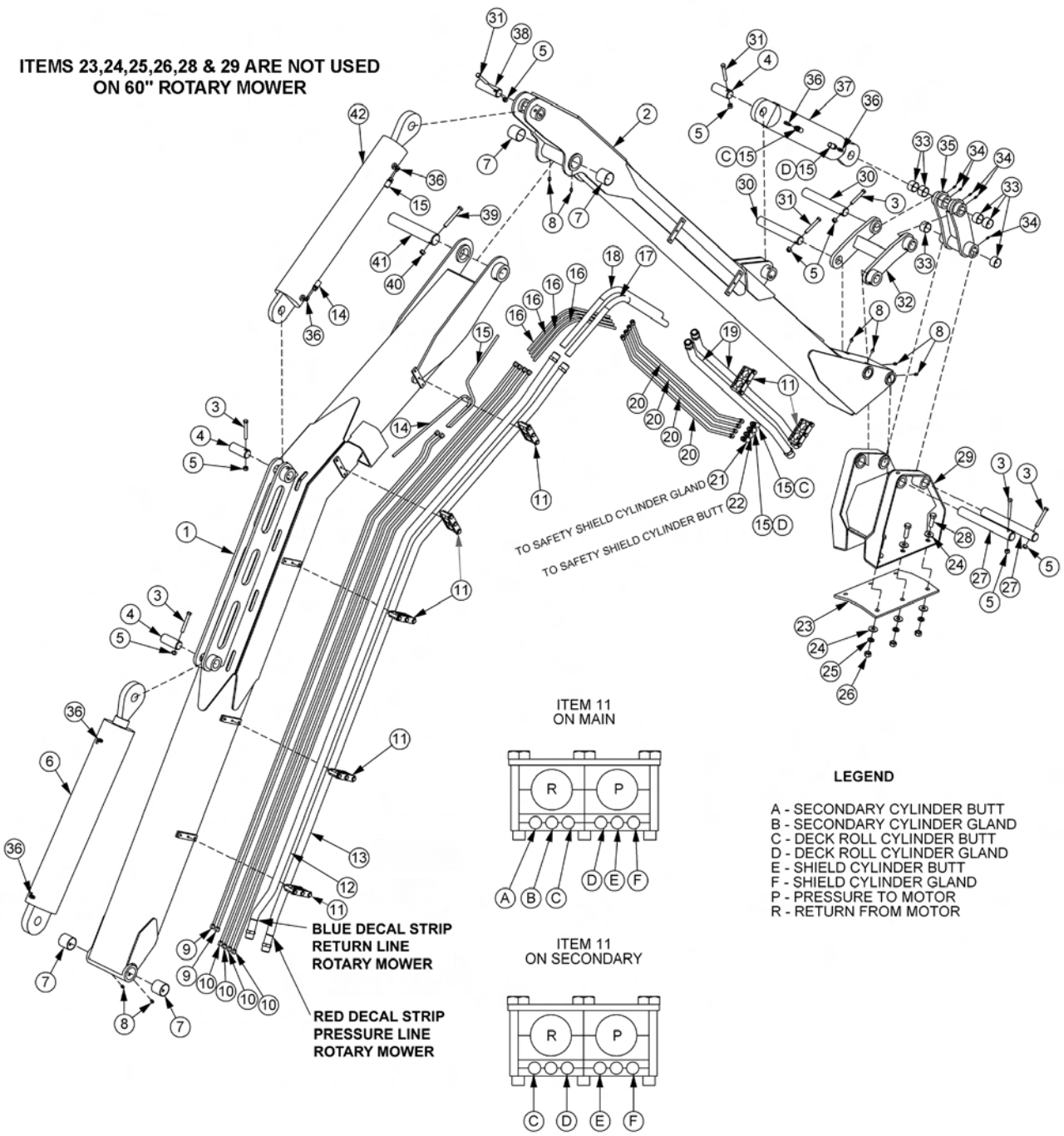

ITEM	PART NO.	QTY.	DESCRIPTION
1	06310075	1	BOOM,MB,PRIMARY,SABER
2	06310076	1	BOOM,MB,SECONDARY,SABER
3	21688	5	CAPSCREW,7/16" X 3-1/4,NC
4	32375	3	PIN,1-1/2" X 3-13/16",W/HOLE
5	21677	8	NYLOCK NUT,7/16",NC
6	32363	1	CYLINDER,5" X 25"

COMMON SABER

Continued...

ITEM	PART NO.	QTY.	DESCRIPTION
7	32362	4	BEARING,DX,2" X 2" LONG
8	6T3211	8	GREASE ZERK,1/8" X STR
9	06506042	2	PRFRMD,1,MAIN,SABER MB
10	06506043	4	PRFRMD,2,MAIN,SABER MB
11	33215	7	TUBE CLAMP KIT
12	06506045	1	PRFRMD,4,MAIN,SABER MB (ROTARY RETURN)
13	06506044	1	PRFRMD,3,MAIN,SABER MB (ROTARY PRESSURE)
14	06500488	1	HOSE,3"/8 X 39"
15	32818	3	HOSE,3/8" X 24"
16	06500489	4	HOSE,3/8" X 52"
17	06500491	1	HOSE,1" X 47"
18	06500490	1	HOSE,1" X 49"
19	33542	2	PRFRMD,2,SEC,SABER
20	32629	4	PRFRMD,1,SEC,SABER
21	33223	1	HOSE,3/8" X 70"
22	33222	1	HOSE,3/8" X 59"
23	32309	1	PLATE,MOUNT,HEAD,MOWER
24	25270	12	FLATWASHER,5/8",GR 8
25	21992	6	LOCKWASHER,5/8"
26	6T2408	6	HEX NUT,5/8",NF
27	32313	2	PIN,MOUNT,SWIVEL
28	6T2290	6	CAPSCREW,5/8" X 2",NF,GR 8
29	32311	1	MOUNT,SWIVEL,HEAD,MOWER
30	32319	2	PIN,LINKAGE,BOOM
31	21687	3	CAPSCREW,7/16" X 3",NC
32	32316	1	LINKAGE,BOOM TO CYLINDER,SABER
33	32318	6	BEARING,DX,1-1/2" X 1" LONG
34	6T3207	6	GREASE ZERK,1/4"
35	32745	1	LINKAGE W/BUSHINGS,SABER
36	32810	6	ELBOW,1/2ORB X 3/8MJ
37	32365	1	CYLINDER,4" X 15"
38	32372	1	PIN,CYLINDER,STAGE,2ND
39	21741	1	CAPSCREW,1/2" X 4",NC
40	21727	1	NYLOCK NUT,1/2"
41	32374	1	PIN,BOOM,STAGE 1ST TO 2ND
42	32364	1	CYLINDER,4-1/2" X 26-1/2"

COMMON SABER

SABER XB BOOM ASSEMBLY

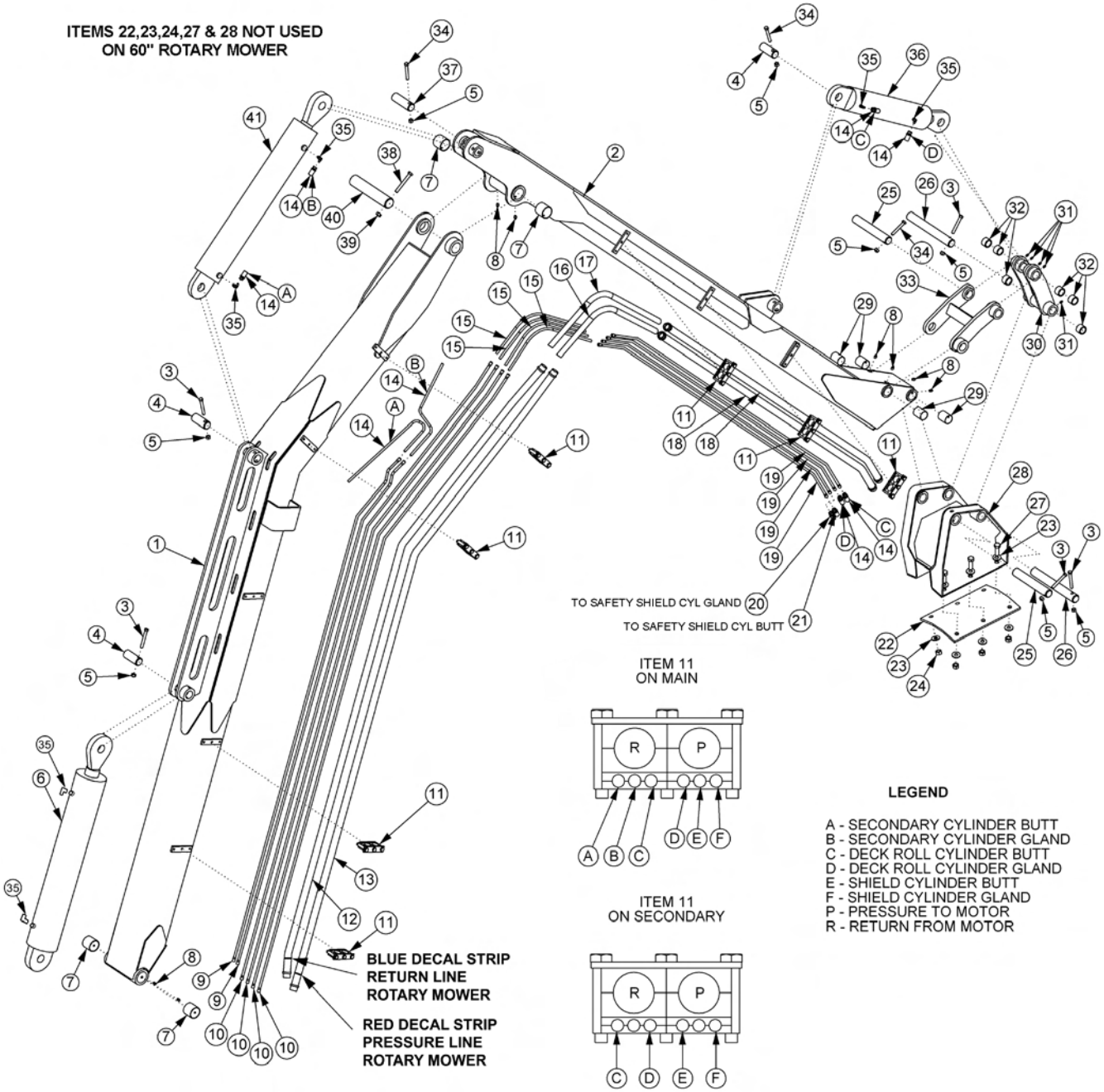

ITEM	PART NO.	QTY.	DESCRIPTION
1	06310031	1	BOOM,LONG,PRIMARY,SABER
2	06310032	1	BOOM,LONG,SECONDARY,SABER
3	21688	5	CAPSCREW,7/16" X 3-1/4",NC
4	32375	3	PIN,1-1/2" X 3-13/16",W/HOLE
5	21677	8	NYLOCK NUT,7/16",NC
6	32363	1	CYLINDER,5" X 25"

COMMON SABER

Continued...

ITEM	PART NO.	QTY.	DESCRIPTION
7	32362	4	BEARING,DX,2" X 2" LONG
8	6T3211	8	GREASE ZERK,1/8" X STR
9	06506029	2	PRFRMD,1,MAIN,SABER XB
10	06506030	4	PRFRMD,2,MAIN,SABER XB
11	33215	7	TUBE CLAMP KIT
12	06506032	1	PRFRMD,4,MAIN,SABER XB (ROTARY RETURN)
13	06506031	1	PRFRMD,3,MAIN,SABER XB (ROTARY PRESSURE)
14	32818	4	HOSE,3/8" X 24"
15	32680	4	HOSE,3/8" X 43"
16	33543	1	HOSE,1" X 39"
17	33544	1	HOSE,1" X 40"
18	06506034	2	PRFRMD,2,SEC,SABER XB
19	06506033	4	PRFRMD,1,SEC,SABER XB
20	33223	1	HOSE,3/8" X 70"
21	33222	1	HOSE,3/8" X 59"
22	32309	1	PLATE,MOUNT,HEAD,MOWER
23	25270	12	FLATWASHER,5/8",GR 8
24	6T2408	6	HEX NUT,5/8",NF
25	32319	2	PIN,LINKAGE,BOOM
26	32313	2	PIN,MOUNT,SWIVEL,HEAD,MOWER
27	6T2290	6	CAPSCREW,5/8" X 2",NF,GR 8
28	32311	1	MOUNT,SWIVEL,HEAD,MOWER
29	32321	4	BEARING,DX,1-1/2" X 2" LONG
30	32745	1	LINKAGE W/BUSHINGS,SABER
31	6T3207	6	GREASE ZERK,1/4"
32	32318	6	BEARING,DX,1-1/2" X 1" LONG
33	32316	1	LINKAGE,BOOM TO CYLINDER,SABER
34	21687	3	CAPSCREW,7/16" X 3", NC
35	32810	6	ELBOW,1/2ORB X 3/8MJ
36	32365	1	CYLINDER,4" X 15"
37	32372	1	PIN,CYLINDER,STAGE,2ND
38	21741	1	CAPSCREW,1/2" X 4",NC
39	21727	1	NYLOCK NUT,1/2"
40	32374	1	PIN,BOOM,STAGE 1ST TO 2ND
41	32364	1	CYLINDER,4-1/2" X 26-1/2"

COMMON SABER

50IN FLAIL ASSEMBLY

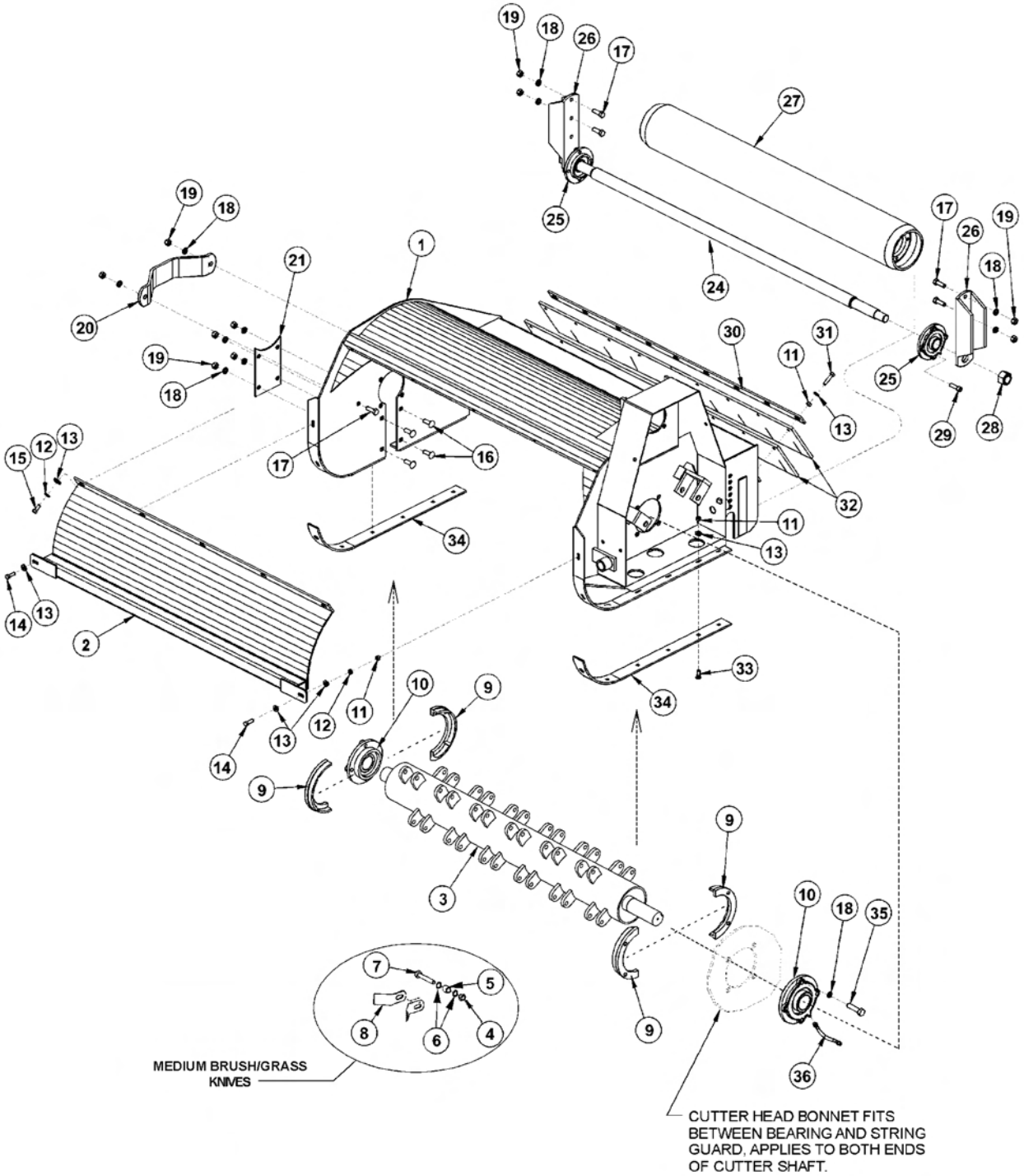

COMMON SABER

Continued...

ITEM	PART NO.	QTY.	DESCRIPTION
----	06742138	1	FLAIL,BOOM,50,MD GRASS,CPLT ASSY (MEDIUM BRUSH/GRASS)
1	06320145	1	CUTTER HEAD BONNET
2	TF3004	1	FRONT SHIELD
3	06700115	1	TBF50 (MEDIUM BRUSH/GRASS KNIFE ASSY)
4	6T2419	24	HEX NUT,9/16”,NC,STOVER
5	41725.01	24	BUSHING,1"OD X 5/8"ID
6	06430122	48	SPACER (MEDIUM BRUSH/GRASS KNIVES)
7	34786	24	CAPSCREW,9/16” X 3-1/2”,NC
8	06521007	48	KNIFE (MEDIUM BRUSH/GRASS CUTTING)
9	31204	2	STRING GUARD SET (2 PIECES PER SET)
10	TF1018	2	FLANGE BEARING,2-3/16”
11	21625	23	HEX NUT,3/8”,NC
12	21988	7	LOCKWASHER,3/8”
13	22016	30	FLATWASHER,3/8”
14	21631	2	CAPSCREW,3/8” X 1-1/4”,NC
15	21630	5	CAPSCREW,3/8” X 1”,NC
16	6T7031D	4	PLOW BOLT,1/2” X 1-1/2”,NC
17	21731	6	CAPSCREW,1/2” X 1-1/2”,NC
18	21990	18	LOCKWASHER,1/2”
19	21725	10	HEX NUT,1/2”,NC
20	TF1040	1	CUTTER SHAFT GUARD
21	TF3007A	1	COVER PLATE
24	TF3406	1	GROUND ROLLER TIE ROD
25	TF1022	2	FLANGE BEARING,1-3/8”
26	TF3407	2	GROUND ROLLER ADJUSTMENT BRACKET
27	TF3405	1	GROUND ROLLER
28	6T1023R	2	NYLOCK NUT,1-1/8”,NF
29	6T2330	8	CAPSCREW,7/16” X 1-1/2”,SOCKET HEAD
30	TB1008	1	FLAP RETAINING BAR
31	21633	9	CAPSCREW,3/8” X 1-3/4”,NC
32	TB1006A	2	DEFLECTOR FLAP
33	6T2270	12	PLOWBOLT,3/8” X 1”,NC
34	TF3001	2	SKID SHOE
35	06530218	8	CAPSCREW,1/2” X 1-3/4”,NC
36	TF1032	1	FLANGE BEARING GREASE HOSE

50IN FLAIL ASSEMBLY, PASS-THROUGH KNIVES

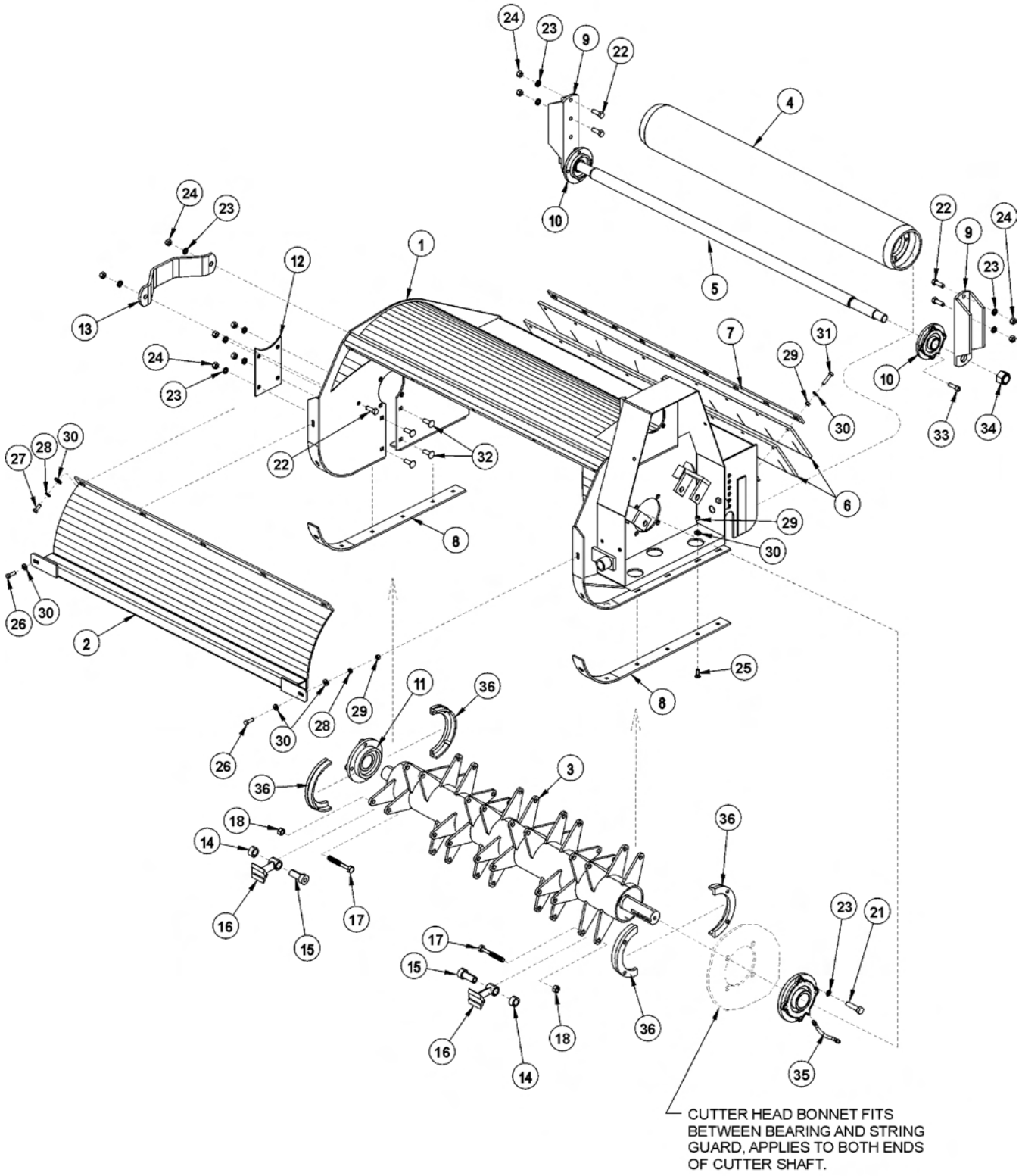

COMMON SABER

Continued...

ITEM	PART NO.	QTY.	DESCRIPTION
---	06742135	1	FLAIL,BOOM,50,CPLT ASSY
1	06320145	1	CUTTER HEAD BONNET
2	TF3004	1	FRONT SHIELD
3	33717	1	TBF50,CUTTERSHAFT,PASS THRU KNIVES
4	TF3405	1	GROUND ROLLER
5	TF3406	1	GROUND ROLLER TIE ROD
6	TB1006A	2	DEFLECTOR FLAP
7	TB1008	1	FLAP RETAINING BAR
8	TF3001	2	SKID SHOE
9	TF3407	2	GROUND ROLLER ADJUSTMENT BRACKET
10	TF1022	2	FLANGE BEARING,1-3/8”
11	TF1018	2	FLANGE BEARING,2-3/16”
12	TF3007A	1	COVER PLATE
13	TF1040	1	CUTTER SHAFT GUARD
14	33858	24	SPACER,COLLAR
15	33857	24	SHOULDER,BUSHING
16	46399.01	24	KNIFE,FLAIL,FORGED
17	33854	24	CAPSCREW,5/8" X 4-1/2",NC
18	32674	24	HEX NUT,5/8",NC
21	21732	8	CAPSCREW,1/2" X 1-3/4",NC
22	21731	6	CAPSCREW,1/2" X 1-1/2",NC
23	21990	18	LOCKWASHER,1/2”
24	21725	10	HEX NUT,1/2”,NC
25	6T2270	12	PLOWBOLT,3/8” X 1”,NC
26	21631	2	CAPSCREW,3/8” X 1-1/4”,NC
27	21630	5	CAPSCREW,3/8” X 1”,NC
28	21988	7	LOCKWASHER,3/8”
29	21625	23	HEX NUT,3/8”,NC
30	22016	30	FLATWASHER,3/8”
31	21633	9	CAPSCREW,3/8” X 1-3/4”,NC
32	6T7031D	4	PLOW BOLT,1/2” X 1-1/2”,NC
33	6T2330	8	CAPSCREW,7/16” X 1-1/2”,NC,SCKT HD
34	6T1023R	2	NYLOCK NUT,1-1/8”,NF
35	TF1032	1	FLANGE BEARING GREASE HOSE
36	31204	2	STRING GUARD SET (2 PIECES PER SET)

COMMON SABER

50IN FLAIL DRIVE ASSEMBLY

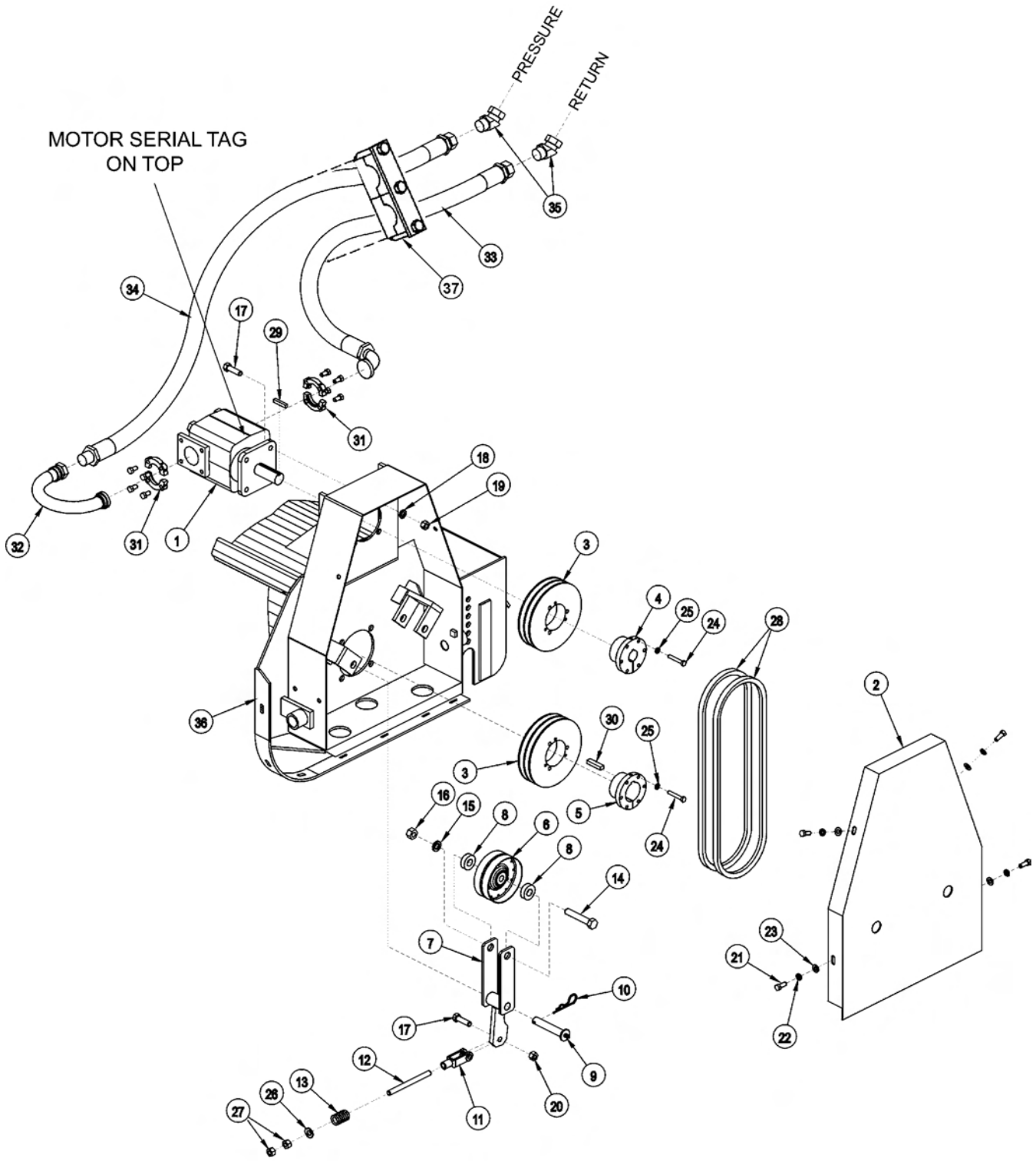

COMMON SABER

50IN FLAIL DRIVE ASSEMBLY

Continued...

ITEM	PART NO.	QTY.	DESCRIPTION
1	06504013	1	MOTOR
2	TF3006	1	BELT GUARD
3	TF3043	2	SHEAVE
4	TF3013	1	BUSHING
5	TF3011	1	BUSHING
6	TF3034	1	IDLER PULLEY
7	TF3205	1	IDLER ARM
8	TF3206	2	IDLER PULLEY SPACER
9	TF3605	1	IDLER ARM PIN WITH ZERK
10	6T3004	1	R - CLIP
11	PT3611A	1	CLEVIS
12	32481	1	THREADED ROD
13	TF3620	1	COMPRESSION SPRING
14	21789	1	CAPSCREW,5/8” X 3-1/2”,NC
15	21992	1	LOCKWASHER,5/8”
16	21775	1	HEX NUT,5/8”,NC
17	21732	5	CAPSCREW,1/2” X 1-3/4”,NC
18	21990	4	LOCKWASHER,1/2”
19	21725	4	HEX NUT,1/2”,NC
20	6T2418	1	LOCK NUT,1/2”
21	21630	4	CAPSCREW,3/8” X 1”,NC
22	21988	4	LOCKWASHER,3/8”
23	22016	4	FLATWASHER,3/8”
24	21584	6	CAPSCREW,5/16” X 2”,NC
25	21987	6	LOCKWASHER,5/16”
26	27938	1	FLATWASHER,1/2”
27	21700	2	HEX NUT,1/2”,NF
28	TF3021	2	BELT
29	TF1125	1	SQUARE KEY
30	TF1025	1	SQUARE KEY MOTOR
31	TF4852	2	FLANGE KIT
32	06506038	1	PREFORMED TUBE
33	06500025	1	HOSE,1 X 71 (RETURN)
34	06500469	1	HOSE,1 X 81 (PRESSURE)
35	24724	2	SWIVEL FITTING
36	------	-	CUTTER HEAD
37	06505130	1	CLAMP,HOSE

COMMON SABER

SABER DIRECT DRIVE FLAIL ASSY

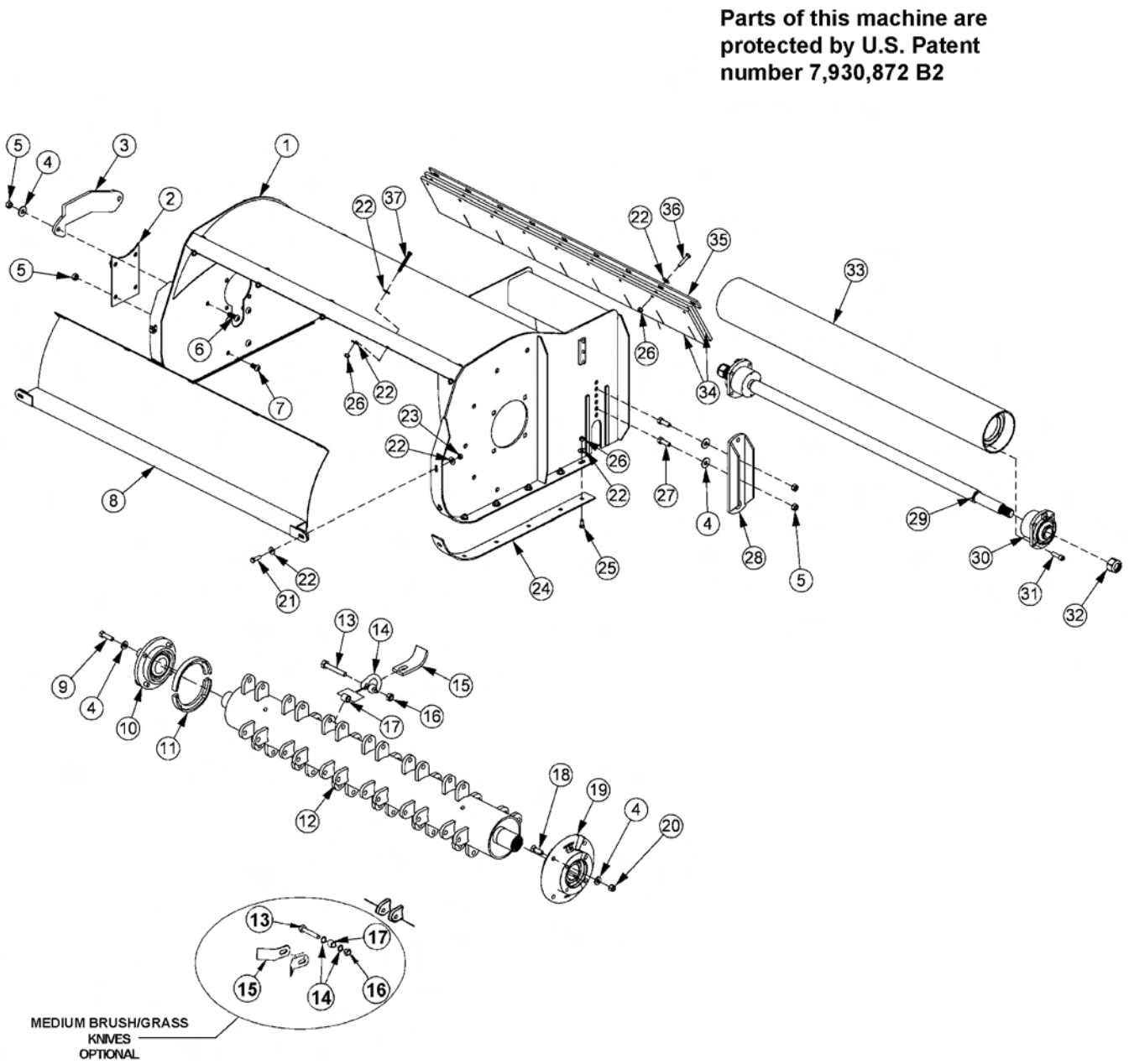

ITEM	PART NO.	QTY.	DESCRIPTION
---	06742086	1	BONNET,SBF50,DD,ASSY (LIGHT BRUSH)
----	06742142	1	BONNET,SBF50,DD,ASSY (MEDIUM BRUSH)

COMMON SABER

Continued...

ITEM	PART NO.	QTY.	DESCRIPTION
1	06320112	1	BONNET
2	TF3007A	1	COVER PLATE
3	06410794	1	GUARD
4	06533006	14	FLATWASHER,1/2",GR 9
5	21727	10	NYLOCK NUT,1/2",NC
6	06530404	2	CAPSCREW,SKT/BUT HD,1/2" X 1-1/2",NC
7	06530401	4	CAPSCREW,SKT/BUT HD,1/2" X 1",NC
8	06320127	1	DOOR,SBF50 DD
9	06530218	4	CAPSCREW,1/2" X 1-3/4",NC,L9
10	06520211	1	BEARING W/ HOUSING
11	31204	1	STRING GUARD
---	06700123	1	CUTTERSHAFT ASSY (LIGHT BRUSH)
----	06700153	1	CUTTERSHAFT ASSY (MEDIUM BRUSH)
12	06370124	1	CUTTERSHAFT W/ INSERT
13	34786	24	KNIFE MNTG BOLT
14	34782	24	KNIFE MNTG CLEVIS (LIGHT BRUSH)
---	06430122	48	SPACER (MEDIUM BRUSH)
15	34780	24	KNIFE (LIGHT BRUSH)
---	06521007	48	KNIFE (MEDIUM BRUSH)
16	6T2419	24	HEX NUT,9/16",STOVER
17	41725.01	24	SPACER
18	06537030	4	PLOW BOLT,1/2" X 1-3/4",NC,GR8
19	06520190	1	BEARING,DRIVE
20	06531005	4	HEX NUT,1/2",NC,L9
21	21631	2	CAPSCREW,3/8" X 1-1/4",NC,GR8
22	22016	35	FLATWASHER,3/8"
23	21627	2	NYLOCK NUT,3/8",NC
24	06410802	2	SKID SHOE
25	6T2270	12	PLOW BOLT,3/8" X 1",NC
26	21625	26	HEX NUT,3/8",NC
27	21731	4	CAPSCREW,1/2" X 1-1/2",NC
28	06320125	2	BRACKET,GROUND ROLLER
29	31452	1	AXLE,TIE-ROD
30	TF1022	2	BEARING,GROUND ROLLER
31	6T2330	8	CAPSCREW,SKT HD,7/16" X 1-1/2",NC
32	6T1023R	2	NYLOCK NUT,1-1/8",NF
33	TF3405	1	GROUND ROLLER
34	TB1006A	2	FLAP
35	TB1008	1	FLAP BAR
36	21633	9	CAPSCREW,3/8" X 1-3/4",NC,GR8
37	06530402	5	CAPSCREW,SKT/BUT HD,3/8" X 2-3/4",NC

COMMON SABER

SABER DIRECT DRIVE ASSEMBLY

Parts of this machine are protected by U.S. Patent number 7,930,872 B2

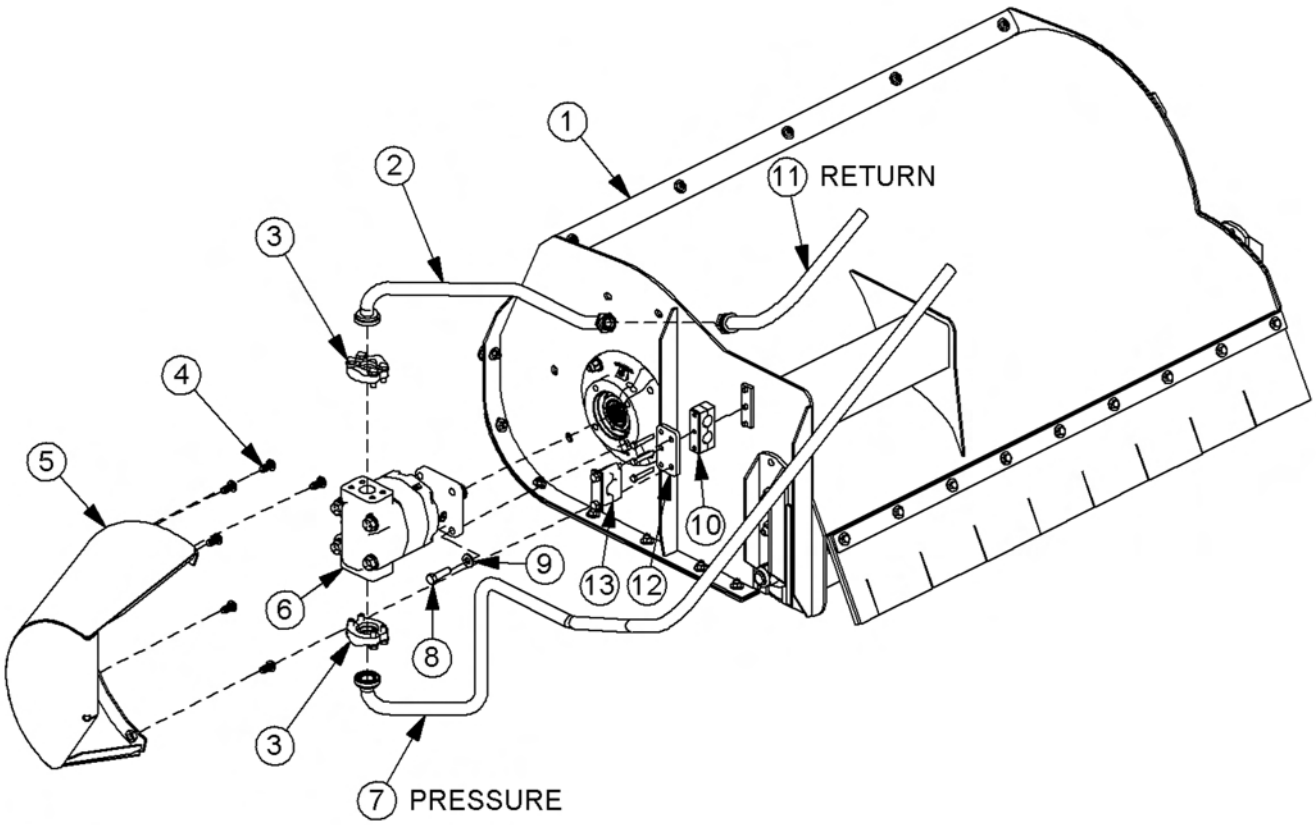

COMMON SABER

Continued...

ITEM	PART NO.	QTY.	DESCRIPTION
1	------	-	BONNET *REFER TO BONNET ASSY
2	06506040	1	PREFORMED TUBE
3	TF4852	2	FLANGE KIT
4	06530401	6	CAPSCREW,SKT/BUT HD,1/2" X 1",NC
5	06320126	1	MOTOR GUARD
6	06504003	1	MOTOR,DD
7	06500539	1	HOSE,1" X 82"
8	06530223	4	CAPSCREW,9/16" X 1-3/4",NC,GR8
9	06533003	4	FLATWASHER,9/16",GR9,SAE
10	06505014	1	CLAMP KIT
11	06500386	1	HOSE,1" X 52"
12	06401418	1	PLATE,CLAMP
13	06505017	1	CLAMP KIT,HOSE

COMMON SABER

63IN FLAIL ASSEMBLY

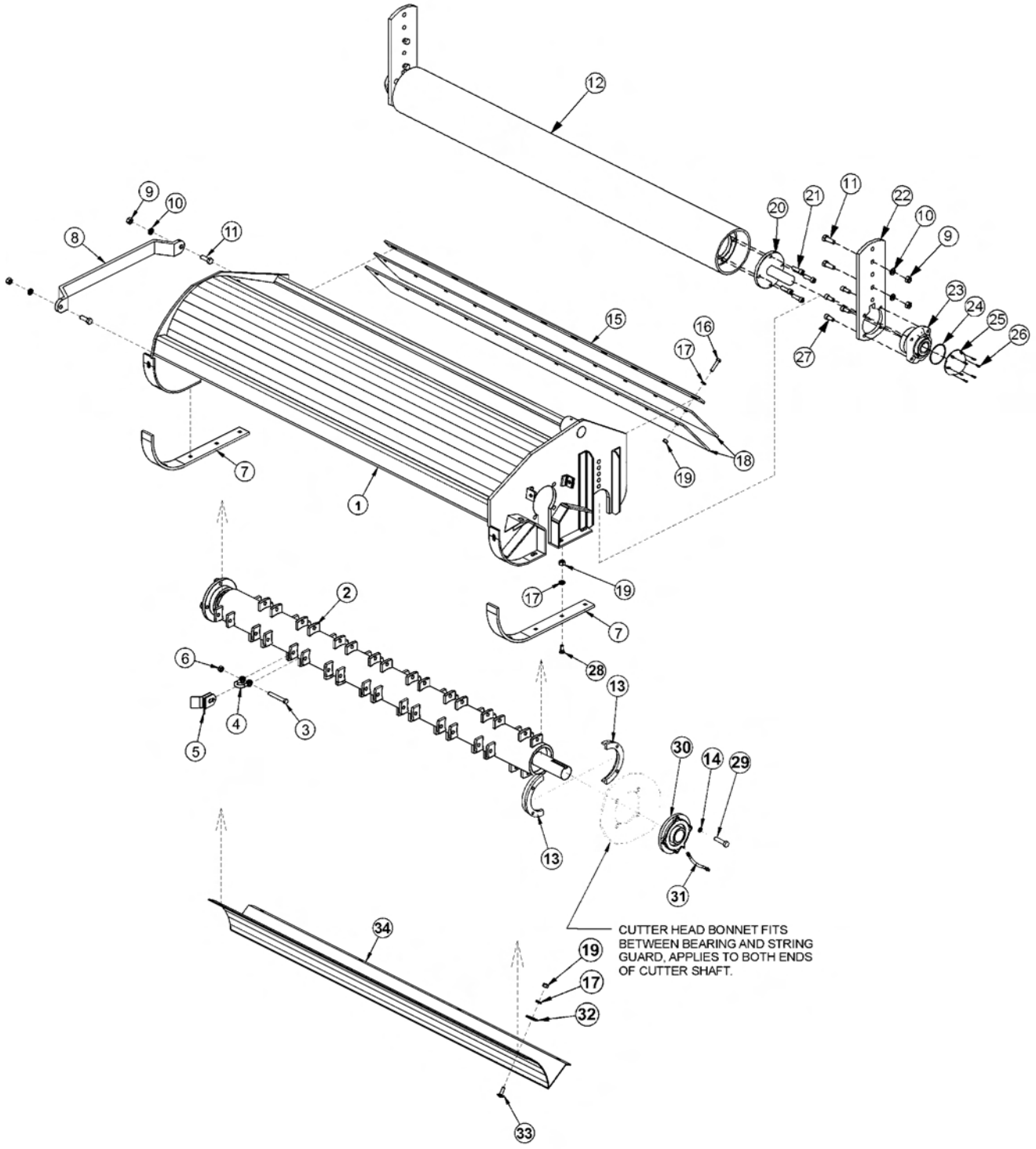

COMMON SABER

Continued...

ITEM	PART NO.	QTY.	DESCRIPTION
------	06200658	1	FLAIL,BOOM,63",GRASS,CPLT ASSY
1	06320110	1	CUTTER HEAD BONNET
2	28743	1	CUTTER SHAFT / KNIFE ASSY STANDARD GRASS
------	28642C	1	CUTTER SHAFT,63",STD
3	TF1021B	36	FLAIL KNIFE MOUNTING BOLT
4	TF1020	36	FLAIL KNIFE MOUNTING CLEVIS
5	33713	72	FLAIL KNIFE - STANDARD
6	21677	36	NYLOCK NUT
7	28086A	2	SKID SHOE
8	27975A	1	CUTTER SHAFT GUARD
9	21725	14	HEX NUT,1/2”,NC
10	21990	14	LOCKWASHER,1/2”
11	21731	6	CAPSCREW,1/2” X 1-1/2”,NC
12	28650A	1	GROUND ROLLER
13	21838	1	CAPSCREW,3/4” X 3-1/2”,NC
14	21825	1	HEX NUT,3/4”,NC
15	28700	1	FLAP RETAINING BAR
16	21633	11	CAPSCREW,3/8” X 1-3/4”,NC
17	21988	28	LOCKWASHER,3/8”
18	28701	2	DEFLECTOR FLAP
19	21625	28	HEX NUT,3/8”,NC
20	TF1045B	2	GROUND ROLLER STUB SHAFT
21	6T2330	8	CAPSCREW,7/16” X 1-1/2”,SKT HD,NC
22	28735	2	ADJUSTABLE ROLLER BRACKET
23	06520028	2	BEARING,FLANGE,1-3/8",GRNDRLLR
24	06520029	2	O-RING
25	06520027	2	CAP,BEARING,GROUNDROLLER
26	06530001	12	CAPSCREW,SKT HD,8-32 X 1/2",SS
27	6T2331	8	CAPSCREW,7/16” X 1” SKT HD,NC
28	6T2270	10	PLOW BOLT,3/8” X 1-1/4”,NC
29	21733	8	CAPSCREW,1/2” X 2”,NC
30	28683	2	FLANGE BEARING
31	TF1032	1	FLANGE BEARING GREASE HOSE
32	6T2615	7	FENDER WASHER,3/8”
33	6T2283	7	CARRIAGE BOLT,3/8” X 1”,NC
34	28665A	1	BAFFLE (INSIDE UPPER REAR OF CUTTER HEAD)

63IN FLAIL DRIVE ASSEMBLY

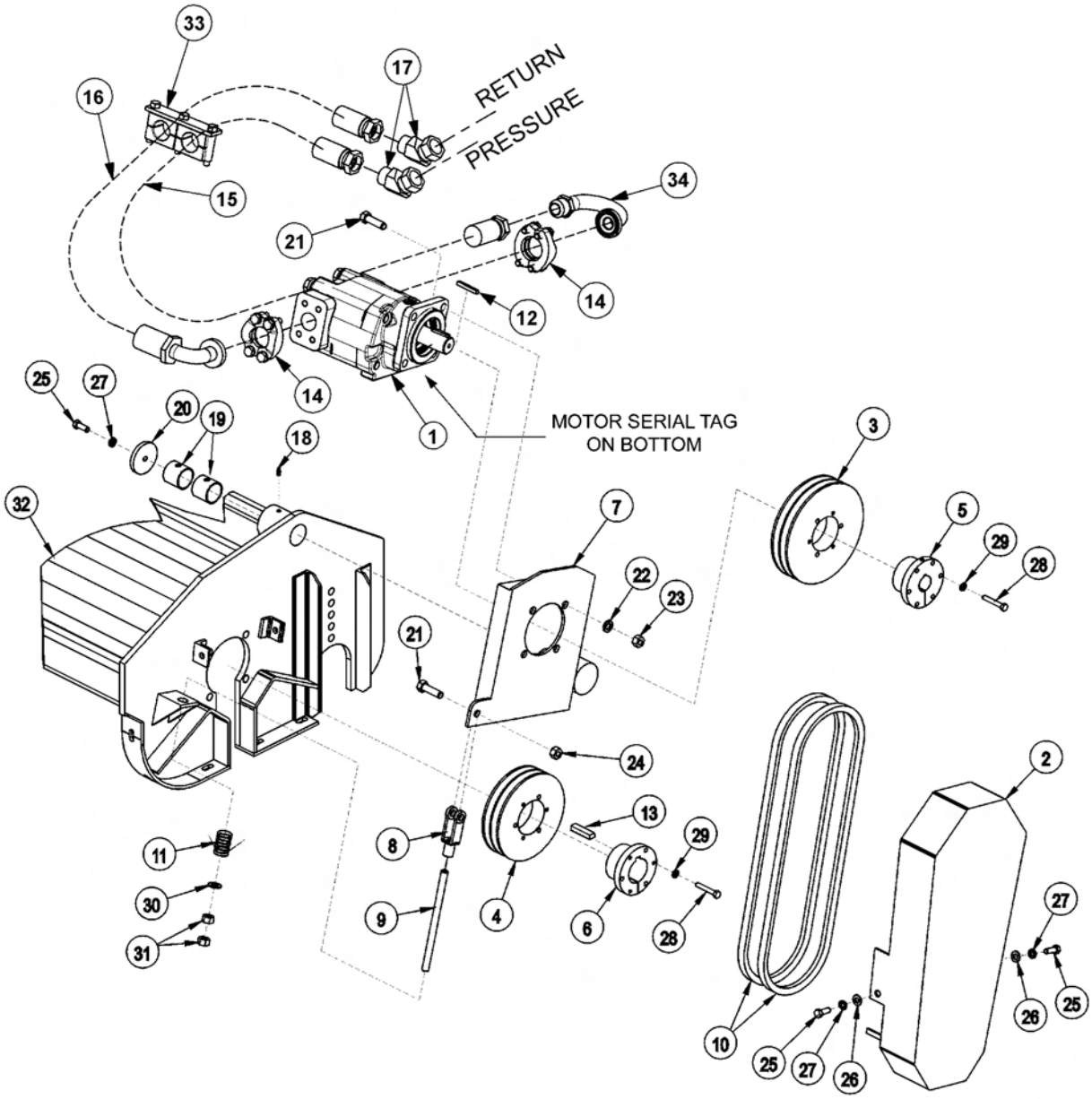

COMMON SABER

63IN FLAIL DRIVE ASSEMBLY

Continued...

ITEM	PART NO.	QTY.	DESCRIPTION
1	06504013	1	MOTOR (M350-1 3/4 GEAR)
2	28703B	1	BELT GUARD
3	TF3044	1	UPPER SHEAVE
4	TF3040	1	LOWER SHEAVE
5	TF3013	1	BUSHING
6	28723	1	BUSHING
7	28679B	1	MOTOR CHANNEL
8	PT3611A	1	CLEVIS
9	40496	1	THREADED ROD
10	28702	2	BELT
11	TF3620A	1	TENSIONER SPRING
12	28572	1	SQUARE KEY
13	TF1025	1	SQUARE KEY
14	TF4852	2	FLANGE KIT
15	30308	1	HOSE,1" X 143" (PRESSURE)
16	30309	1	HOSE,1" X 143" (RETURN)
17	24724	2	SWIVEL FITTING
18	TF1033	1	GREASE ZERK
19	27580	1	BUSHING
20	28682	1	MOTOR CHANNEL WASHER
21	21732	5	CAPSCREW,1/2” X 1-3/4”,NC
22	21990	5	LOCKWASHER,1/2”
23	21725	4	HEX NUT,1/2”,NC
24	21727	1	NYLOCK NUT,1/2”,NC
25	21630	3	CAPSCREW,3/8” X 1”,NC
26	22016	2	FLATWASHER,3/8”
27	21988	3	LOCKWASHER,3/8”
28	21584	6	CAPSCREW,5/16” X 2”,NC
29	21987	6	LOCKWASHER,5/16”
30	27938	1	FLATWASHER,1/2”
31	21700	2	HEX NUT,1/2”,NF
32	------	-	CUTTER HEAD *REFER TO MOWER ASSY
33	35131	1	CLAMP,HOSE
34	06506038	1	PREFORMED TUBE

50IN SABER ROTARY MOWER

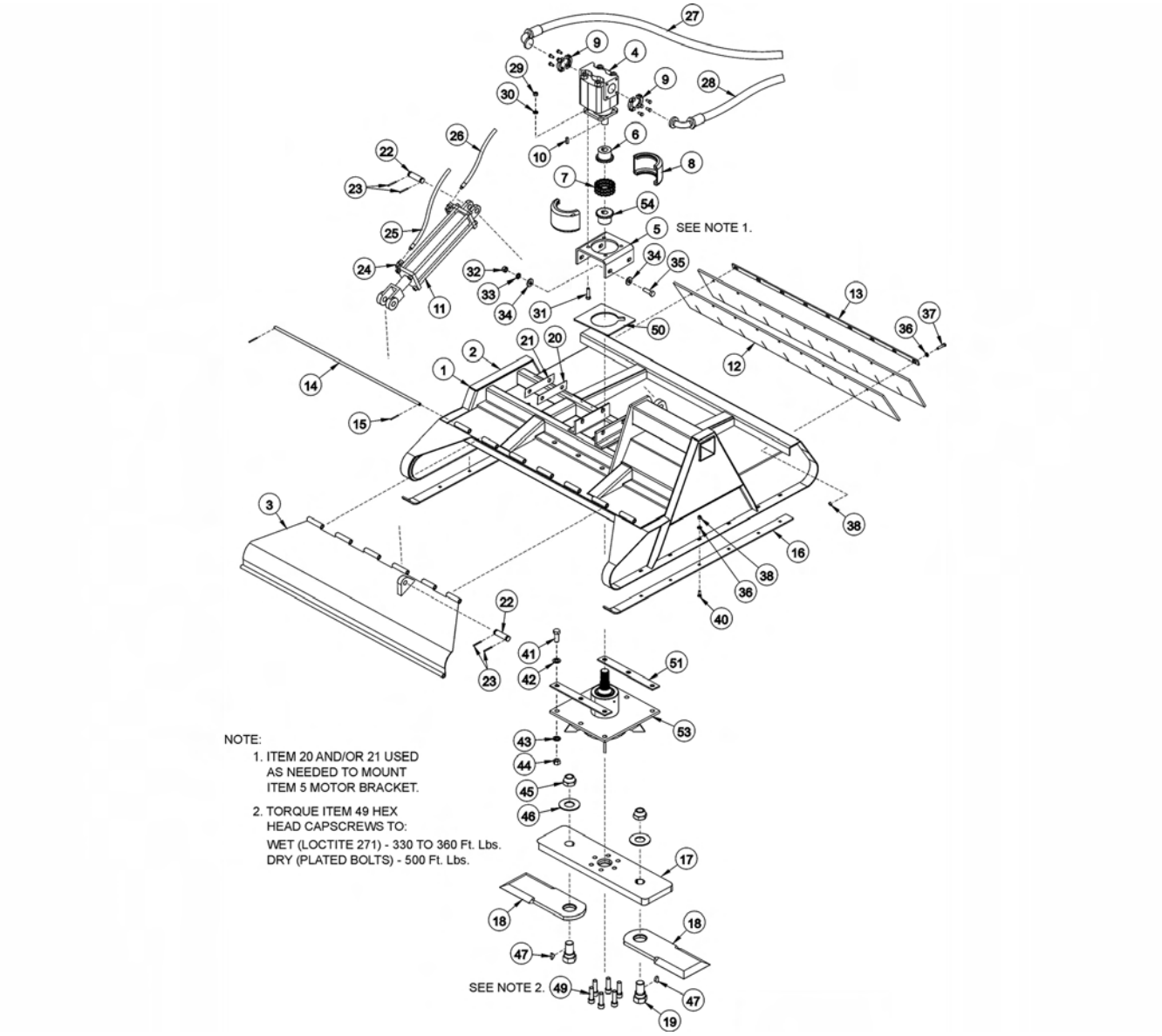

ITEM	PART NO.	QTY.	DESCRIPTION
1	33304	-	ROTARY,SABER 50",ASSY
2	32914	1	ROTARY,SABER 50",DECK
3	32915	1	SHIELD,50" ROTARY,SABER
4	06504012	1	MOTOR
5	33198	1	MOTOR MOUNTING BRACKET
6	34479	1	SPROCKET,MOTOR
7	34482	1	CHAIN COUPLING
8	34483	1	COVER COUPLING
9	TF4852	2	FLANGE KIT
10	TF1124	1	KEY,WOODRUFF
11	33185	1	CYLINDER

COMMON SABER

Continued...

ITEM	PART NO.	QTY.	DESCRIPTION
12	32952	2	DEFLECTOR FLAP
13	33211	1	RETAINING BAR,FLAP
14	32951	1	HINGE PIN,SHIELD
15	33924	2	ROLLPIN,HINGE PIN
16	32936	2	SKID SHOE
17	34509	1	BAR,KNIVE MOUNTING
18	33203	1	KNIVES,SET OF 2,ROTARY,3/4”
19	34883	2	BOLT,KNIFE
20	6T0822	3	SHIM,MOTOR MOUNT,THIN
21	6T0822A	3	SHIM,MOTOR MOUNT,THICK
22	TB1033	2	CLEVIS PIN
23	06537021	4	ROLL PIN,CLEVIS
24	3334306	2	ELBOW,3/8MP X 3/8MJ90
25	33223	1	HOSE,CYLINDER,3/8” X 70”
26	33222	1	HOSE,CYLINDER,3/8” X 59”
27	33548	1	HOSE,MOTOR - RETURN (BLUE DECAL STRIP)
28	33549	1	HOSE,MOTOR - PRESSRUE (RED DECAL STRIP)
29	21725	4	HEX NUT,1/2",NC
30	21990	4	LOCK WASHER,1/2"
31	21733	4	CAPSCREW,1/2" X 2",NC
32	6T2408	4	HEX NUT,5/8",NF
33	21992	4	LOCK WASHER,5/8"
34	33764	8	FLAT WASHER,5/8"
35	6T2290	4	CAPSCREW,5/8" X 2",NF
36	22016	25	FLAT WASHER,3/8"
37	21633	9	CAPSCREW,3/8" X 1-3/4",NC
38	21625	25	HEX NUT,3/8",NC
40	6T2270	14	PLOW BOLT,3/8" X 1",NC
41	33879	6	CAPSCREW,3/4" X 2-1/2",NF
42	33880	6	FLAT WASHER,3/4"
43	21993	6	LOCK WASHER,3/4"
44	6T2413	6	HEX NUT,3/4",NF
45	33860	2	HEX NUT,KNIFE
46	33859	2	FLAT WASHER,KNIFE
47	PT209	2	KEY,WOODRUFF
49	34475	6	HEX HD CAPSCREW,3/4" X 2",NF
50	33614	1	PLATE,SPINDLE COLLAR
51	33617	2	SHIM,STRAP,SPINDLE
53	33219	1	SPINDLE
54	------	-	SPROCKET *REFER TO SPINDLE PARTS
---	33891	-	KIT,KNIVES (INCLUDES ITEMS 18,19,39,45,46,47)

COMMON SABER

50IN SABER MB ROTARY MOWER

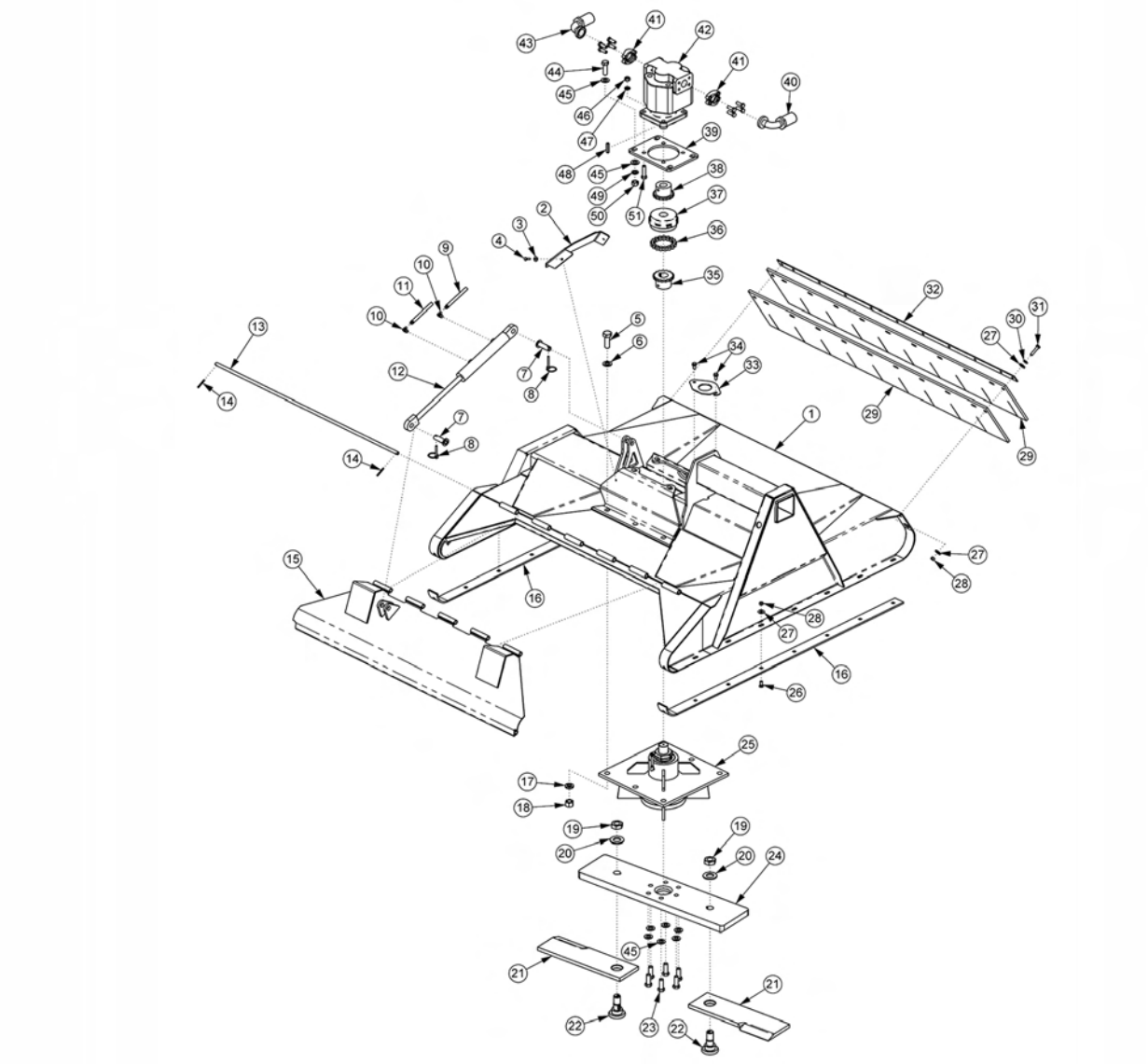

ITEM	PART NO.	QTY.	DESCRIPTION
---	06741036	-	ROTARY,SABER,ASSY
1	06320009	1	ROTARY,SABER,DECK
2	06410439	1	COVER,MOTOR MNT
3	22014	2	FLATWASHER,1/4"
4	21530	2	CAPSCREW,1/4" X 1",NC
5	33879	6	CAPSCREW,3/4" X 2-1/4",NF,GR 8
6	33880	6	FLATWASHER,3/4",GR 8,SAE
7	33984	2	PIN,SHIELD,50"
8	RD1032	2	PIN,LYNCH,1/4" X 2"
9	06500366	1	HOSE,3/8" X 98"
10	32810	2	ELBOW,1/2" X 3/8"
11	06500670	1	HOSE,3/8" X 108"

COMMON SABER

Continued...

ITEM	PART NO.	QTY.	DESCRIPTION
12	33785	1	CYL,1-1/2 X 8"
13	33778	1	HINGE PIN,50" RTRY
14	6T3017	2	ROLLPIN,3/16" X 1"
15	33754	1	SHIELD,50" RTRY
16	33777	2	SKID SHOE,50" RTRY
17	21993	6	LOCKWASHER,3/4",GR 8
18	6T2413	6	HEX NUT,3/4",NF,GR 8
19	6T1023R	2	KNIFE MTG NUT,1-1/8",NF,GR8
20	06533002	2	FLATWASHER,1-1/8",GR8
21	06521001	2	KNIFE,TRB 50,5/8"
22	06538000	2	KNIFE MTG BOLT,5/8",SHOULDER
23	6T2259	6	CAPSCREW,5/8" X 1-3/4",NF,GR8
24	06400388	1	BAR,BLADE,TRB
25	6T1024H5	1	SPINDLE
26	6T2270	16	PLOW BOLT,3/8" X 1",NC,GR5
27	22016	29	FLATWASHER,3/8"
28	21625	29	HEX NUT,3/8",NC
29	33775	2	FLAP,50" RTRY
30	21988	13	LOCKWASHER,3/8"
31	21633	13	CAPSCREW,3/8" X 1-3/4",NC
32	33774	1	FLAP RETAINER,50" RTRY
33	33779	1	PLATE,COVER,KNF HOLE
34	33881	2	CAPSCREW,FLG,3/8" X 3/4",NC
35	------	-	SPROCKET *REFER TO SPINDLE PARTS
36	6T1029	1	CHAIN,COUPLING (5016)
37	6T1033	1	COVER,COUPLING
38	21223	1	SPROKET,1-1/4" BORE
39	33776	1	MOTOR MOUNT,PLATE,50" RTRY
40	06500495	1	HOSE - PRESSURE (RED DECAL STRIP)
41	TF4852	2	KIT,FLANGE #20
42	06504012	1	MOTOR,(M365-1-1/2" GEAR)
43	06500669	1	HOSE - RETURN (BLUE DECAL STRIP)
44	6T2290	4	CAPSCREW,5/8" X 2",NF,GR 8
45	33764	14	FLATWASHER,5/8",GR 8,SAE
46	21725	4	HEX NUT,1/2" NC
47	21990	4	LOCKWASHER,1/2"
48	TF1124	1	KEY,WOODRUFF
49	21992	4	LOCKWASHER,5/8"
50	6T2408	4	HEX NUT,5/8",NF
51	21733	4	CAPSCREW,1/2" X 2",NC
52	6T2259	6	CAPSCREW,5/8" X 1-3/4",NF,GR 8

COMMON SABER

50IN SABER XB ROTARY MOWER

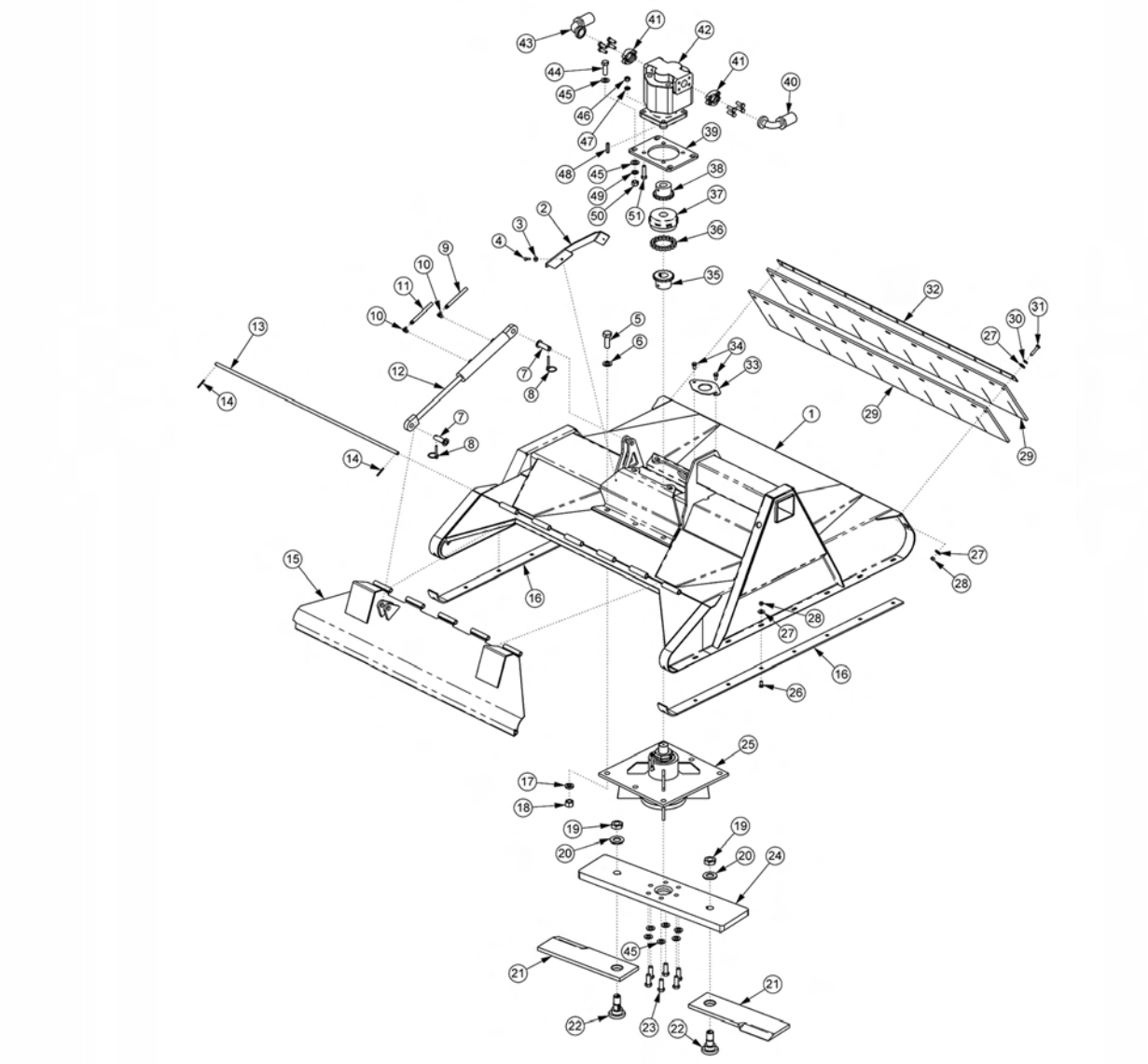

ITEM	PART NO.	QTY.	DESCRIPTION
---	06741036	-	ROTARY,SABER XB,ASSY
1	06320009	1	ROTARY,SABER XB,DECK
2	06410439	1	COVER,MOTOR MNT
3	22014	2	FLATWASHER,1/4"
4	21530	2	CAPSCREW,1/4" X 1",NC
5	33879	6	CAPSCREW,3/4" X 2-1/4",NF,GR 8
6	33880	6	FLATWASHER,3/4",GR 8,SAE
7	33984	2	PIN,SHIELD,50"
8	RD1032	2	PIN,LYNCH,1/4" X 2"
9	06500291	1	HOSE,3/8" X 74"
10	32810	2	ELBOW,1/2" X 3/8"
11	06500292	1	HOSE,3/8" X 85"

COMMON SABER

Continued...

ITEM	PART NO.	QTY.	DESCRIPTION
12	33785	1	CYL,1-1/2 X 8"
13	33778	1	HINGE PIN,50" RTRY
14	6T3017	2	ROLLPIN,3/16" X 1"
15	33754	1	SHIELD,50" RTRY
16	33777	2	SKID SHOE,50" RTRY
17	21993	6	LOCKWASHER,3/4",GR 8
18	6T2413	6	HEX NUT,3/4",NF,GR 8
19	6T1023R	2	KNIFE MTG NUT,1-1/8",NF,GR8
20	06533002	2	FLATWASHER,1-1/8",GR8
21	06521001	2	KNIFE,TRB 50,5/8"
22	06538000	2	KNIFE MTG BOLT,5/8",SHOULDER
23	6T2259	6	CAPSCREW,5/8" X 1-3/4",NF,GR8
24	06400388	1	BAR,BLADE,TRB
25	6T1024H5	1	SPINDLE
26	6T2270	16	PLOW BOLT,3/8" X 1",NC,GR5
27	22016	29	FLATWASHER,3/8"
28	21625	29	HEX NUT,3/8",NC
29	33775	2	FLAP,50" RTRY
30	21988	13	LOCKWASHER,3/8"
31	21633	13	CAPSCREW,3/8" X 1-3/4",NC
32	33774	1	FLAP RETAINER,50" RTRY
33	33779	1	PLATE,COVER,KNF HOLE
34	33881	2	CAPSCREW,FLG,3/8" X 3/4",NC
35	------	-	SPROCKET *REFER TO SPINDLE PARTS
36	6T1029	1	CHAIN,COUPLING (5016)
37	6T1033	1	COVER,COUPLING
38	21223	1	SPROKET,1-1/4" BORE
39	33776	1	MOTOR MOUNT,PLATE,50" RTRY
40	33549	1	HOSE - PRESSURE (RED DECAL STRIP)
41	TF4852	2	KIT,FLANGE #20
42	06504012	1	MOTOR,(M365-1-1/2" GEAR)
43	33548	1	HOSE - RETURN (BLUE DECAL STRIP)
44	6T2290	4	CAPSCREW,5/8" X 2",NF,GR 8
45	33764	14	FLATWASHER,5/8",GR 8,SAE
46	21725	4	HEX NUT,1/2" NC
47	21990	4	LOCKWASHER,1/2"
48	TF1124	1	KEY,WOODRUFF
49	21992	4	LOCKWASHER,5/8"
50	6T2408	4	HEX NUT,5/8",NF
51	21733	4	CAPSCREW,1/2" X 2",NC
52	6T2259	6	CAPSCREW,5/8" X 1-3/4",NF,GR 8

COMMON SABER

60IN SABER ROTARY MOWER

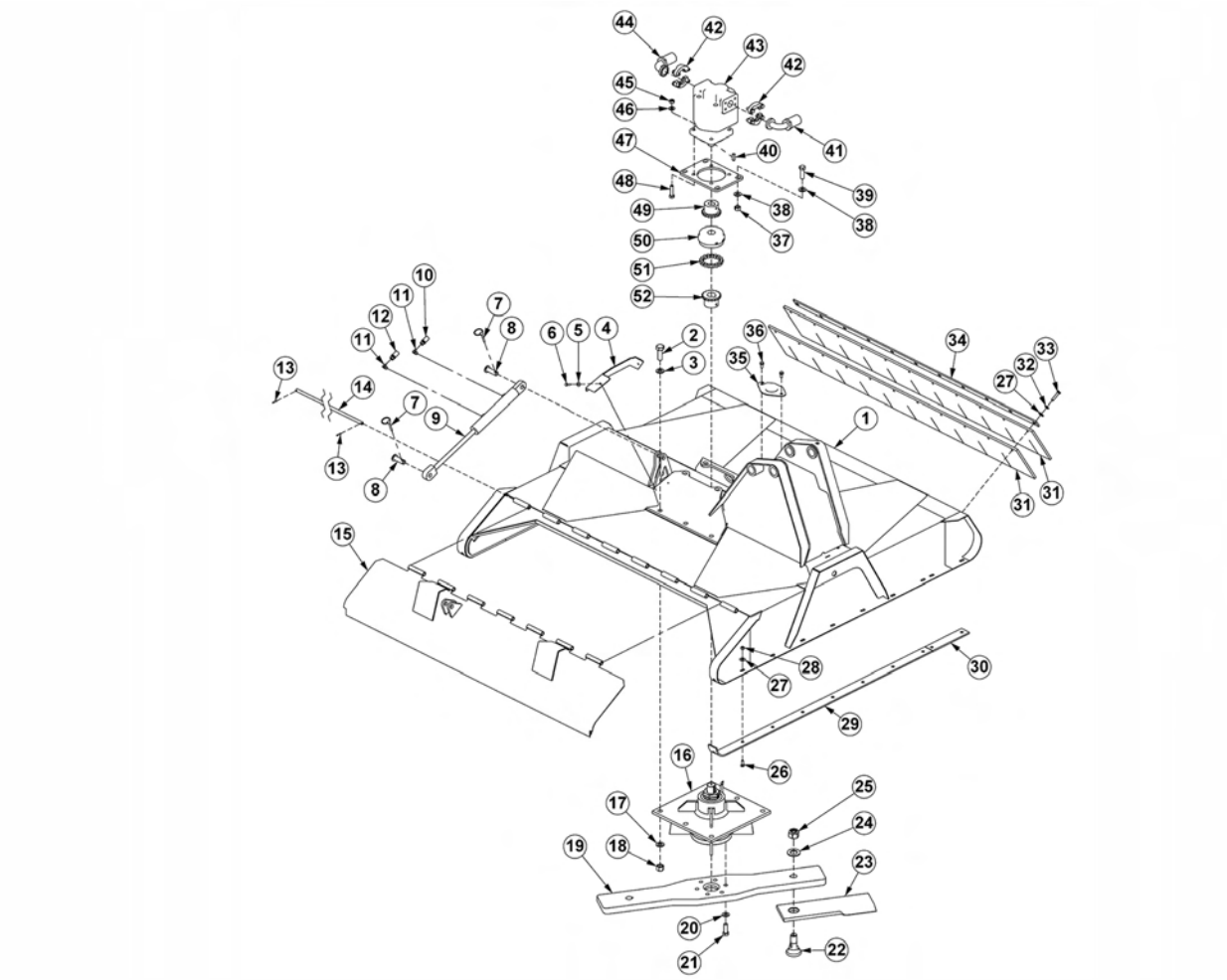

ITEM	PART NO.	QTY.	DESCRIPTION
---	06741072	-	ROTARY,SABER 60",ASSY
1	06320169	1	ROTARY,SABER 60",DECK
2	33879	6	CAPSCREW, 3/4" X 2-1/4",NF GR 8
3	33880	6	FLATWASHER,3/4",GR 8,SAE
4	06410439	1	COVER,MOTOR MNT
5	22014	2	FLATWASHER,1/4”
6	21530	2	CAPSCREW,1/4" X 1",NC
7	RD1032	2	PIN,LYNCH,1/4" X 2"
8	33984	2	PIN,SHIELD
9	33785	1	CYL,1-1/2" X 8"
10	06500292	1	HOSE,3/8" X 85"
---	06500389	1	HOSE,3/8" X 88" (SABER MB)
11	32810	2	ELBOW,1/2" X 3/8"
12	06500384	1	HOSE,3/8" X 94"
---	06500366	1	HOSE,3/8" X 98" (SABER MB)
13	6T3017	2	ROLLPIN,3/16" X 1"

COMMON SABER

Continued...

ITEM	PART NO.	QTY.	DESCRIPTION
14	06420139	1	HINGE PIN,60" RTRY
15	06320162	1	SHIELD,60" RTRY
16	6T1024H5	1	SPINDLE
17	21993	6	LOCKWASHER,3/4",GR 8
18	6T2413	6	HEX NUT,3/4",NF,GR 8
19	06400690	1	BAR,BLADE,60” RTRY
20	33764	6	FLATWASHER,5/8",GR 8,SAE
21	6T2259	6	CAPSCREW,5/8" X 1-3/4",NF,GR 8
22	06538000	2	KNIFE MTG BOLT,5/8" SHOULDER
23	06521001	2	KNIFE,TRB50,5/8”
24	06533002	2	FLATWASHER,1-1/8",GR 8
25	6T1023R	2	KNIFE MTG NUT,1-1/8",NF,GR 8
26	6T2270	20	PLOW BOLT,3/8" X 1",NC,GR5
27	22016	31	FLATWASHER,3/8"
28	21625	20	HEX NUT,3/8",NC
29	33777	2	SKID SHOE,50" RTRY
30	06401245	2	SKID SHOE,60" RTRY
31	06520238	2	FLAP,DEFLECTOR,60” RTRY
32	21988	11	LOCKWASHER,3/8"
33	21633	11	CAPSCREW,3/8" X 1-3/4",NC
34	6T0823	1	FLAP RETAINER,60" RTRY
35	33779	1	PLATE,COVER,KNF HOLE
36	33881	2	CAPSCREW,FLG,3/8" X 3/4",NC
37	6T2408	4	HEX NUT,5/8",NF
38	33764	8	FLATWASHER,5/8",GR 8,SAE
39	6T2290	4	CAPSCREW,5/8" X 2",NF,GR 8
40	TF1124	1	KEY,WOODRUFF
41	33549	1	HOSE - PRESSURE (RED DECAL STRIP)
---	33548	1	HOSE - PRESSURE (SABER MB) (RED DECAL STRIP)
42	TF4852	2	KIT,FLANGE #20
43	06504011	1	MOTOR,(M365-2-1/4" GEAR)
44	33548	1	HOSE - RETURN (BLUE DECAL STRIP)
---	06500495	1	HOSE - RETURN (SABER MB) (BLUE DECAL STRIP)
45	21727	4	NYLOCK NUT,1/2",NC
46	06533004	4	FLATWASHER,1/2",GR 8,SAE
47	33776	1	MOTOR MOUNT,PLATE,50" RTRY
48	21733	4	CAPSCREW,1/2" X 2",NC
49	21223	1	SPROKET,1-1/4" BORE
50	6T1033	1	COVER,COUPLING
51	6T1029	1	CHAIN,COUPLING (5016)
52	------	-	SPROCKET *REFER TO SPINDLE PARTS

COMMON SABER

60IN ROTARY KNIFE AND DISH OPTION

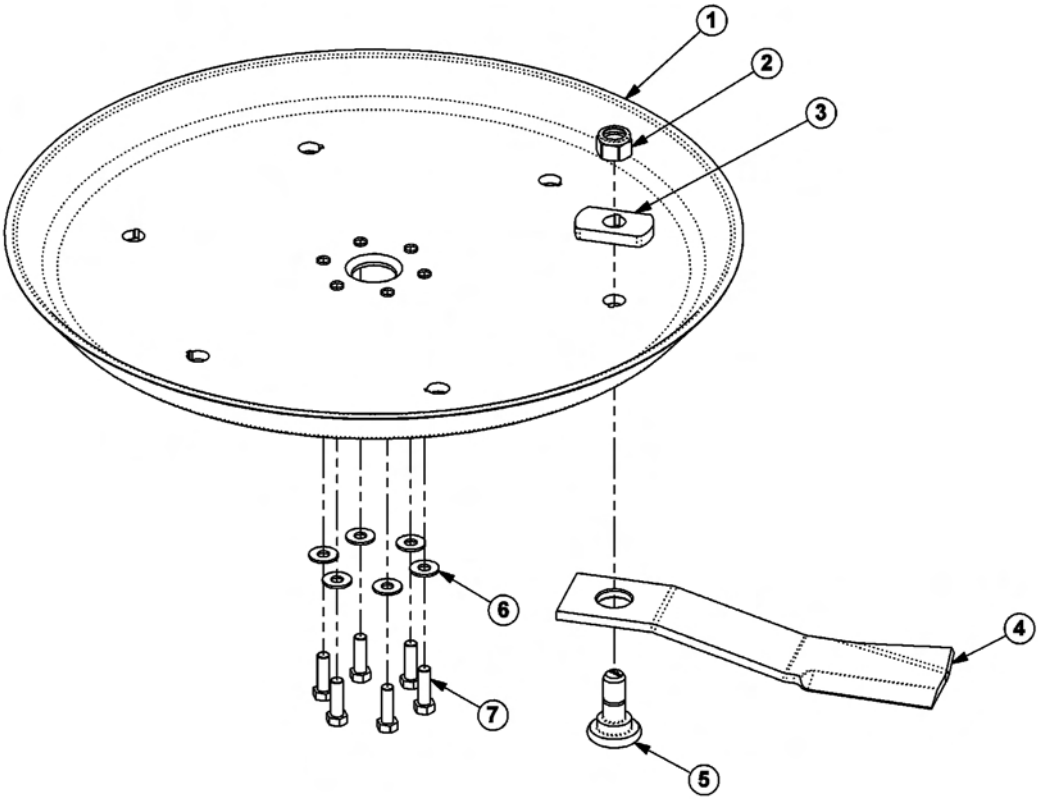

COMMON SABER

Continued...

ITEM	PART NO.	QTY.	DESCRIPTION
1	34876	1	BLADE MOUNTING DISK
2	6T1023R	2	NYLOCK NUT,1-1/8”
3	34878	2	SPACER
4	34497	2	KNIFE MOUNTING BOLT
5	34684	2	GRASS KNIFE
6	33764	6	FLATWASHER
7	6T2259	6	CAPSCREW
---	27167	1	BOLT KIT (INCLUDES ITEMS 6 & 7)
----	6T1825	1	LOCTITE - USED ON ALL DISK MOUNTING BOLTS
---	33893	1	KNIFE KIT (INCLUDES ITEMS 2, 4 & 5)

SABER SPINDLE ASSEMBLY

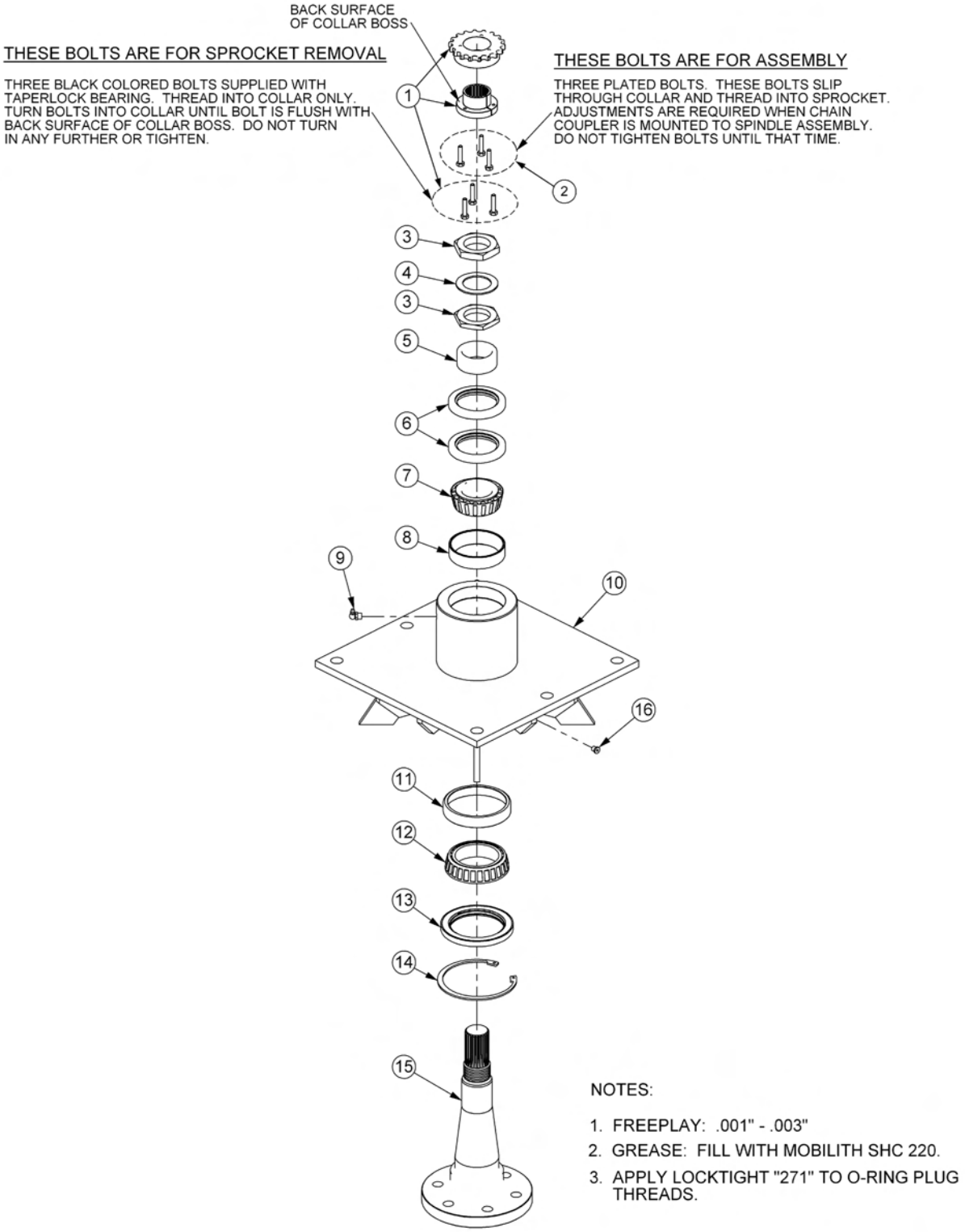

NOTES:

1. FREEPLAY: .001" - .003"
2. GREASE: FILL WITH MOBILITH SHC 220.
3. APPLY LOCKTIGHT "271" TO O-RING PLUG THREADS.

COMMON SABER

SABER SPINDLE ASSEMBLY

Continued...

ITEM	PART NO.	QTY.	DESCRIPTION
---	33219	-	SPINDLE ASSY,ROTARY
1	34480	1	TAPERLOCK SPROCKET
2	21530	3	CAPSCREW,1/4” X 1”,NC
3	6T1015	2	BEARING LOCK NUT,THIN
4	22596	1	JAMWASHER
5	6T1014	1	BEARING ADJUST SLEEVE
6	6T1011	2	UPPER SEAL,SMALL
7	6T1012	1	BEARING CONE,SMALL
8	6T1013	1	BEARING CUP,SMALL
9	6T3210	1	GREASE ZERK
10	32953	1	SPINDLE HOUSING,SABER
11	33200	1	BEARING CUP,LARGE
12	33199	1	BEARING CONE,LARGE
13	33201	1	LOWER SEAL,LARGE
14	33202	1	SNAP RING
15	33186	1	SPINDLE,SABER
16	06503064	1	O-RING PLUG,1/8”

COMMON SABER

SABER XB & 60IN SPINDLE ASSY

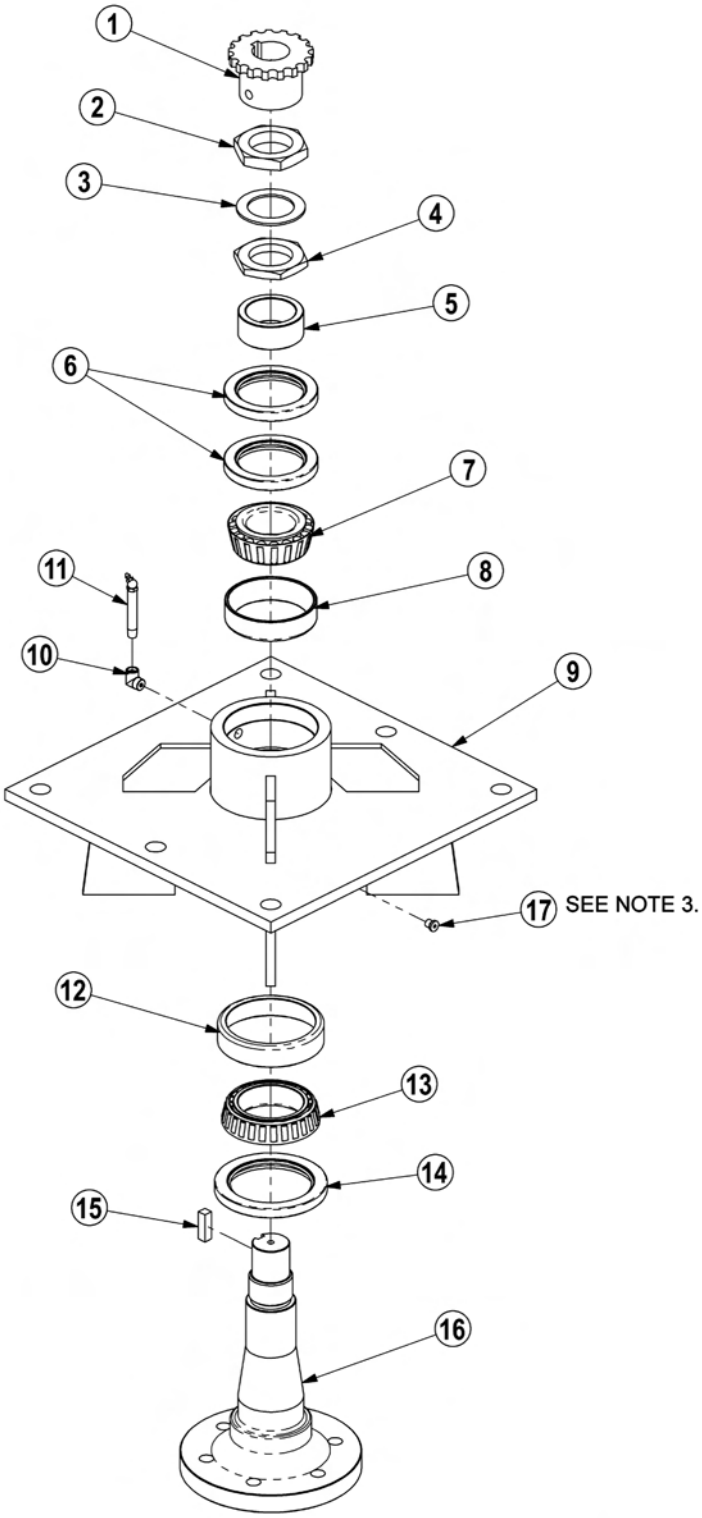

NOTES:
1. FREEPLAY: .001" - .003"
2. GREASE: FILL WITH MOBILITH SHC 220.
3. APPLY LOCTITE "271" TO O-RING PLUG THRDS.

COMMON SABER

Continued...

ITEM	PART NO.	QTY.	DESCRIPTION
---	6T1024H5	-	SPINDLE ASSEMBLY
1	6T1031	1	SPROCKET
2	6T1016	1	BEARING LOCK NUT,THICK
3	22596	1	JAM WASHER
4	6T1015	1	BEARING ADJUSTMENT NUT,THIN
5	6T1014	1	BEARING ADJUSTMENT SLEEVE
6	6T1011	1	UPPER SEAL (SET OF 2)
7	6T1012	1	BEARING CONE
8	6T1013	1	BEARING CUP
9	6T1010H	1	SPINDLE HOUSING
10	30570	1	FITTING,STREET ELBOW
11	33990	1	GREASE ZERK
12	6T1013H	1	BEARING CUP
13	6T1012H	1	BEARING CONE
14	6T1011H	1	LOWER SEAL
15	6T1019	1	SPINDLE KEY
16	PT1018H-5	1	SPINDLE
17	06503064	1	O-RING PLUG,1/8”
---	31771	-	SPINDLE REBUILD KIT (ITEMS 2 THRU 8 & 12 THRU 15)

3IN X 17-1/2IN WELDED CYLINDER BREAKDOWN

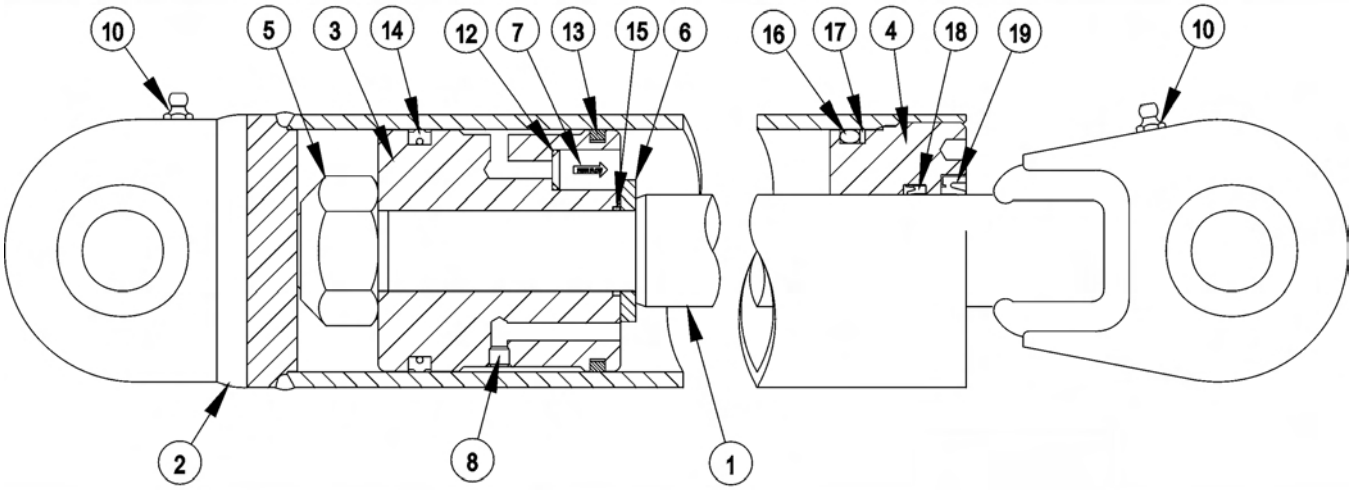

WARNING - MECHANICAL FASTENERS MUST BE TORQUED TO RECOMMENDED SPECIFICATIONS DURING REPAIR TO PREVENT PERSONAL INJURY OR EQUIPMENT DAMAGE.

ITEM	PART NO.	QTY.	DESCRIPTION
---	33705	-	CYLINDER,WELDED,3" X 17-1/2"
1	34571	1	PISTON ROD ASSY
2	34572	1	BUTT & TUBE ASSY
3	34573	1	PISTON
4	34574	1	GLAND
5	34575	1	LOCK NUT,1"-14 UNS (TORQUE TO 315 FT.LB.)
6	34576	1	SPACER
7	34577	1	CHECK VALVE,KEPNER
8	34578	1	ORIFICE
9	33761	1	SEAL KIT,PACKING (ITEMS 12 THRU 19)
10	------	2	GREASE ZERK
12	------	1	O - RING
13	------	1	CAST IRON PISTON RING
14	------	1	CROWN SEAL
15	------	1	O - RING
16	------	1	O - RING
17	------	1	BACK - UP WASHER
18	------	1	U - CUP
19	------	1	WIPER
20	34334	-	SPHERICAL BEARING (NOT SHOWN)

COMMON SABER

4IN X 15IN WELDED CYLINDER BREAKDOWN

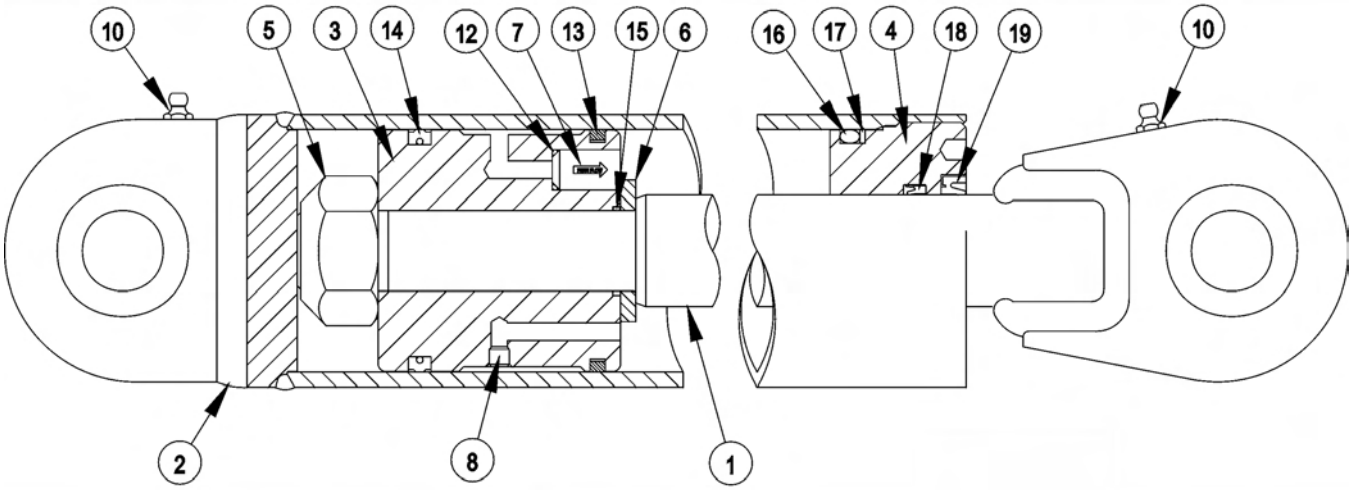

WARNING - MECHANICAL FASTENERS MUST BE TORQUED TO RECOMMENDED SPECIFICATIONS DURING REPAIR TO PREVENT PERSONAL INJURY OR EQUIPMENT DAMAGE.

ITEM	PART NO.	QTY.	DESCRIPTION
---	32365	-	CYLINDER,WELDED,4" X 15"
1	34580	1	PISTON ROD ASSY
2	34581	1	BUTT & TUBE ASSY
3	34582	1	PISTON
4	34583	1	GLAND
5	34584	1	LOCK NUT,1-1/4"-12 UNF (TORQUE TO 510 FT.LB.)
9	33757	1	SEAL KIT,PACKING (ITEMS 12 THRU 19)
10	------	2	GREASE ZERK
12	------	1	O - RING
13	------	1	CAST IRON PISTON RING
14	------	1	CROWN SEAL
15	------	1	O - RING
16	------	1	O - RING
17	------	1	BACK - UP WASHER
18	------	1	U - CUP
19	------	1	WIPER
20	34335	-	SPHERICAL BEARING (NOT SHOWN)

COMMON SABER

4-1/2IN X 26-1/2IN WELDED CYLINDER BREAKDOWN

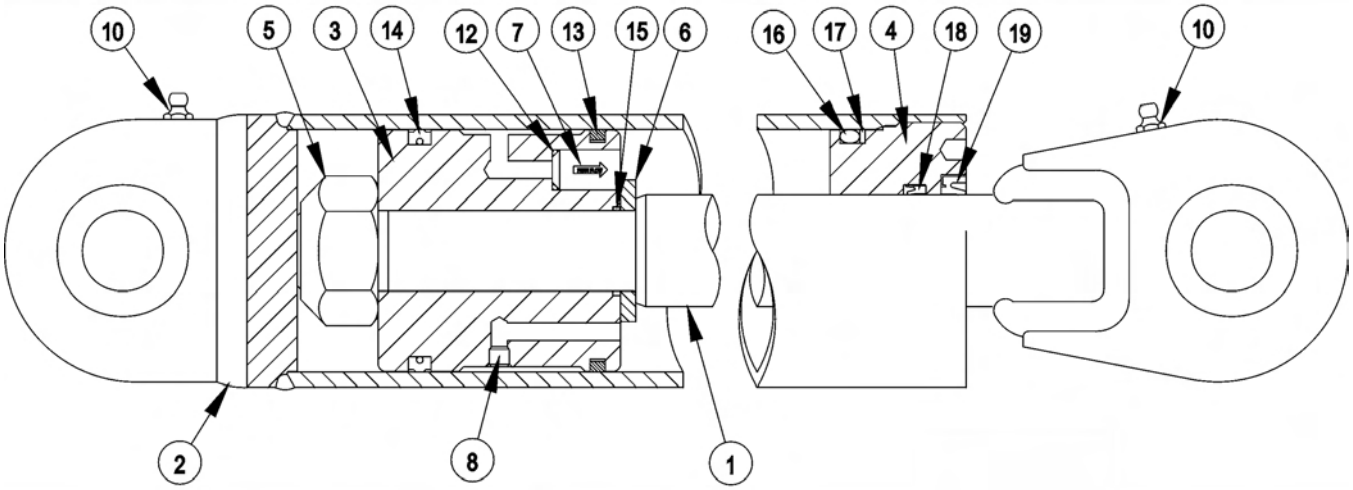

WARNING - MECHANICAL FASTENERS MUST BE TORQUED TO RECOMMENDED SPECIFICATIONS DURING REPAIR TO PREVENT PERSONAL INJURY OR EQUIPMENT DAMAGE.

ITEM	PART NO.	QTY.	DESCRIPTION
---	32364	-	CYLINDER,WELDED,4-1/2" X 26-1/2"
1	34586	1	PISTON ROD ASSY
2	34587	1	BUTT & TUBE ASSY
3	34588	1	PISTON
4	34589	1	GLAND
5	34590	1	LOCK NUT,1-1/4"-12 UNF (TORQUE TO 510 FT.LB.)
9	33758	1	SEAL KIT,PACKING (ITEMS 12 THRU 19)
10	------	2	GREASE ZERK
12	------	1	O - RING
13	------	1	CAST IRON PISTON RING
14	------	1	CROWN SEAL
15	------	1	O - RING
16	------	1	O - RING
17	------	1	BACK - UP WASHER
18	------	1	U - CUP
19	------	1	WIPER
20	34335	-	SPHERICAL BEARING (NOT SHOWN)

COMMON SABER

5IN X 25IN WELDED CYLINDER BREAKDOWN

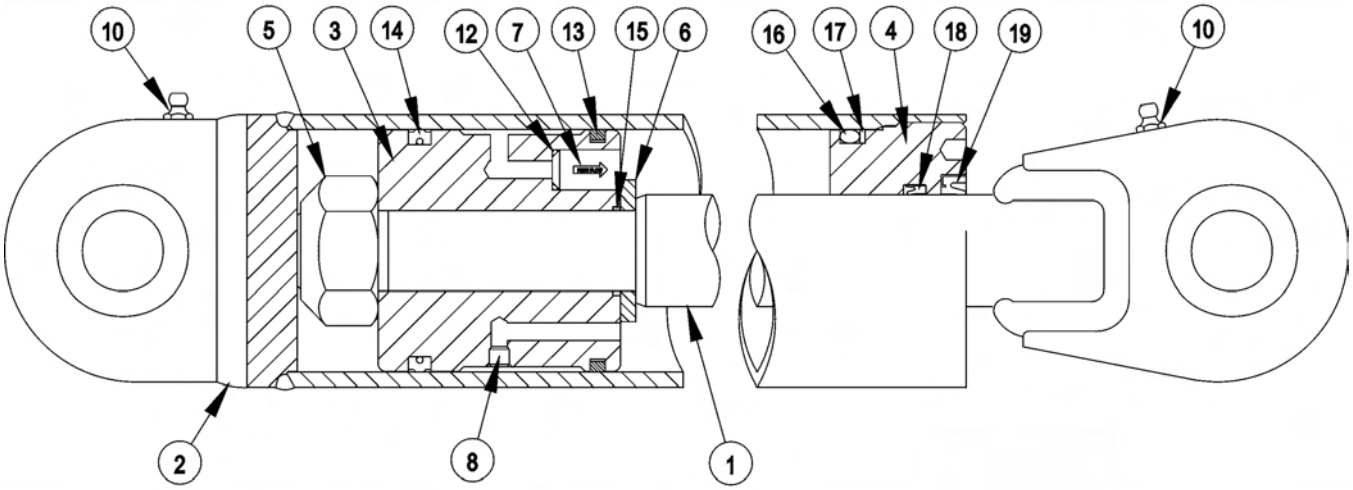

WARNING - MECHANICAL FASTENERS MUST BE TORQUED TO RECOMMENDED SPECIFICATIONS DURING REPAIR TO PREVENT PERSONAL INJURY OR EQUIPMENT DAMAGE.

ITEM	PART NO.	QTY.	DESCRIPTION
---	32363	-	CYLINDER,WELDED,5" X 25"
1	34592	1	PISTON ROD ASSY
2	34593	1	BUTT & TUBE ASSY
3	34594	1	PISTON
4	34595	1	GLAND
5	34596	1	LOCK NUT,1-3/4"-12 UNF (TORQUE TO 1800 - 2000 FT.LB.)
7	34597	1	CHECK VALVE,KEPNER
8	34598	1	ORIFICE
9	33759	1	SEAL KIT,PACKING (ITEMS 12 THRU 19)
10	------	2	GREASE ZERK
12	------	1	O - RING
13	------	1	CAST IRON PISTON RING
14	------	1	CROWN SEAL
15	------	1	O - RING
16	------	1	O - RING
17	------	1	BACK - UP WASHER
18	------	1	U - CUP
19	------	1	WIPER
20	34335	-	SPHERICAL BEARING (NOT SHOWN)

COMMON SABER

PUMP AND GRILL GUARD OPTIONS

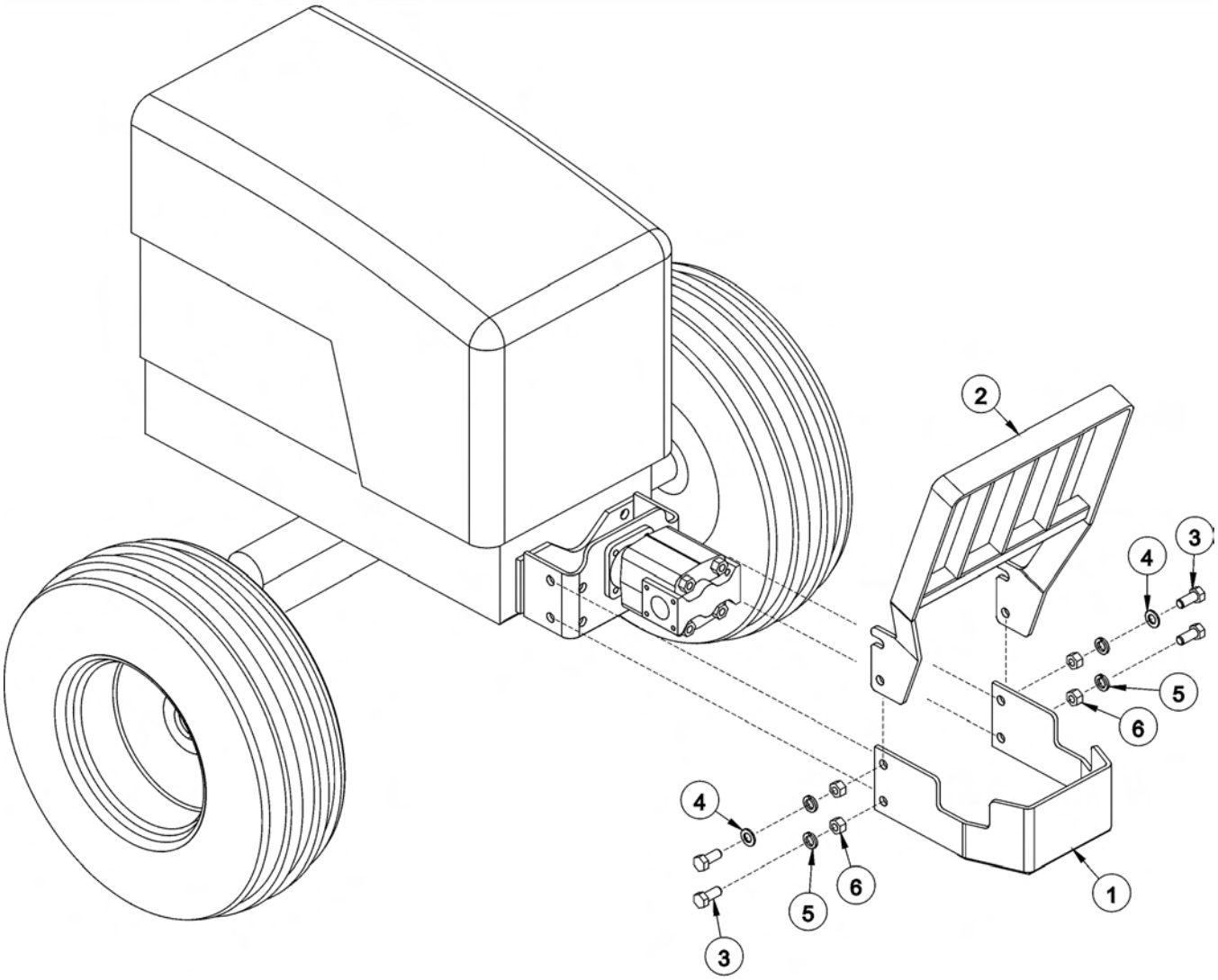

ITEM	PART NO.	QTY.	DESCRIPTION
1	32430	1	UNIVERSAL PUMP GUARD
2	32737	1	UNIVERSAL GRILL GUARD
3	21833	4	CAPSCREW,3/4" X 2-1/4",NC
4	22021	2	FLATWASHER,3/4"
5	21993	4	LOCKWASHER,3/4"
6	21825	4	HEX NUT,3/4",NC

COMMON SABER

RESERVOIR TANK FILTER ASSEMBLY

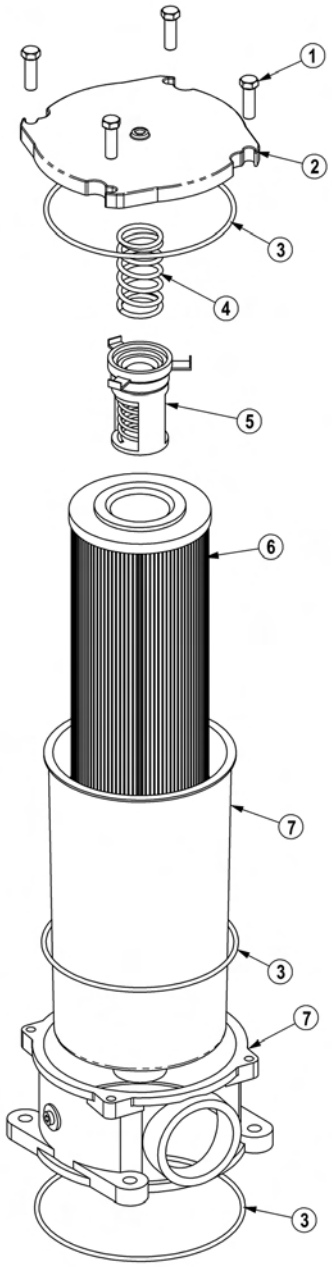

ITEM	PART NO.	QTY.	DESCRIPTION
------	06505044	-	FILTER ASSY SAE 10 MICRON
1	28583	4	CAPSCREW,8MM X 25MM(1.25 PITCH)
2	06505045	1	COVER
3	06505046	1	SEAL KIT
4	06505047	1	SPRING
5	06505048	1	BYPASS
6	35259	1	FILTER,10 MIC,RETURN LINE
7	06505049	1	CAN/BODY

COMMON SABER

FRONT HYDRAULIC PUMP

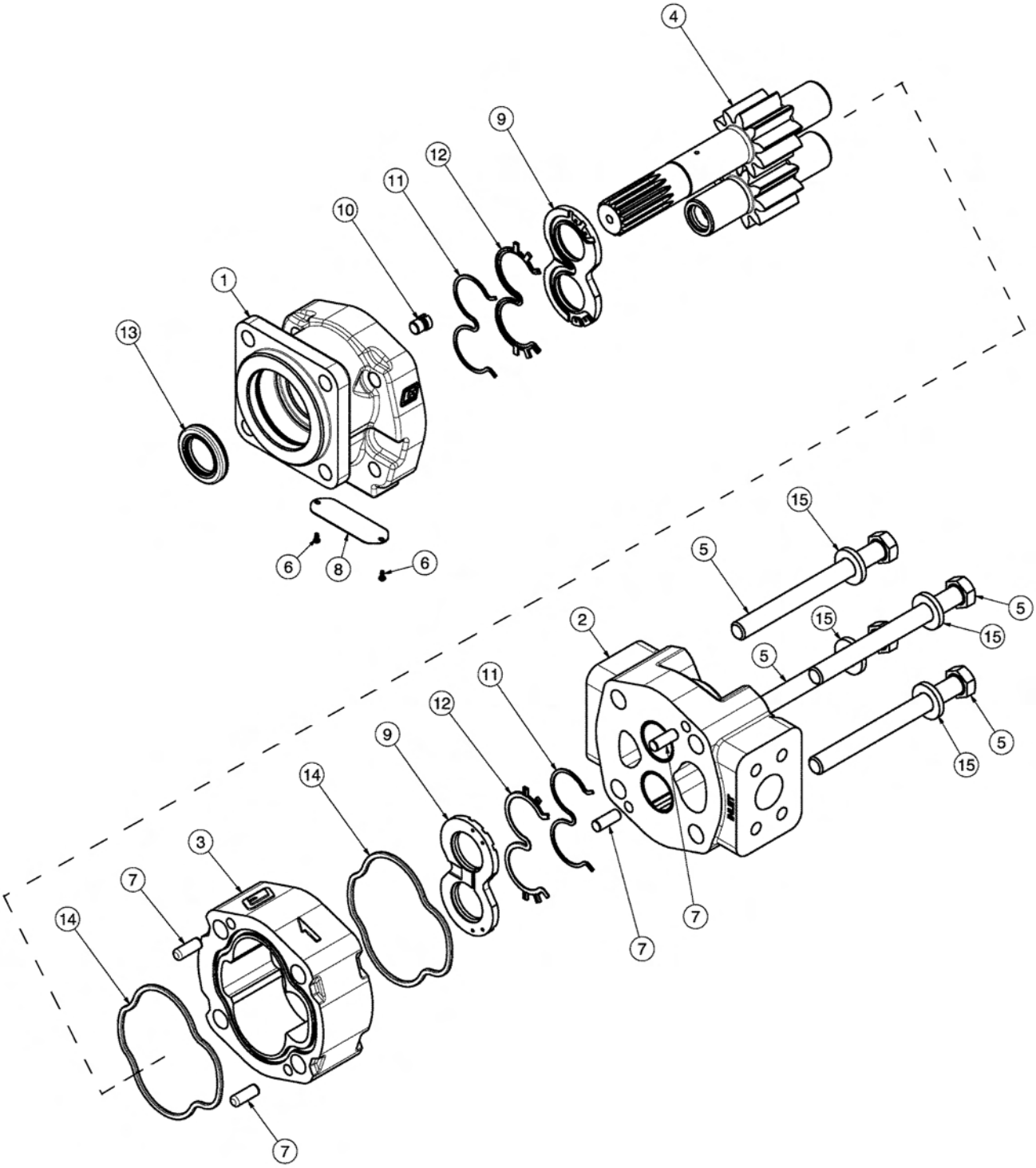

COMMON SABER

Continued...

ITEM	PART NO.	QTY.	DESCRIPTION
---	23152	1	PUMP ASSEMBLY,1-3/4”,COMPLETE
1	22766	1	SHAFT END COVER
2	22779	1	PORT END COVER
3	22774	1	GEAR HOUSING,1-3/4”
4	22771	1	GEAR SET
5	23824	4	CAPSCREW
6	06504078	2	SCREW,DRIVE
7	22773	4	DOWEL PINS
8	06504077	1	NAMEPLATE
9	22770	2	THRUST PLATE
10	22767	1	PLUG
11	06504075	2	SEAL,BK-UP
12	06504074	2	SEAL,CHAN
13	22765	1	SEAL,LIP
14	06504076	2	SEAL,SQ-R
15	02961917	4	WASHER
---	24150	1	SEAL KIT (INCLUDES 11, 12, 13 AND 14)

50IN AND 63IN FLAIL MOTOR BREAKDOWN

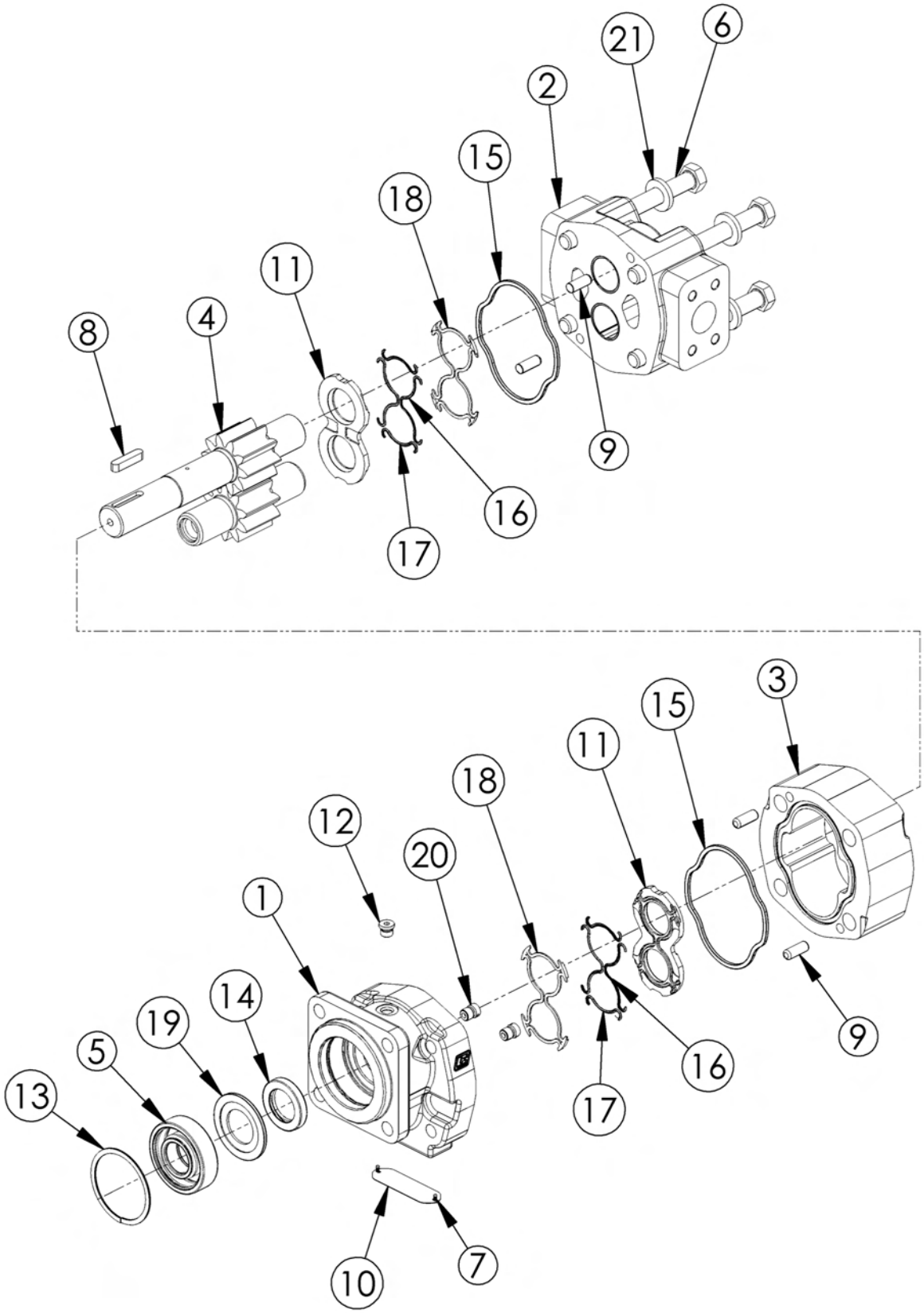

COMMON SABER

50IN AND 63IN FLAIL MOTOR BREAKDOWN

Continued...

ITEM	PART NO.	QTY.	DESCRIPTION
------	06504013	-	MOTOR ASSEMBLY 350
1	06504039	1	SHAFT END COVER
2	06504040	1	PORT END COVER
3	06504041	1	GEAR HOUSING
4	06504042	1	MATCHED GEAR SET
5	TF4402	1	BALL BEARING
6	06504043	4	CAP SCREW
7	06504044	2	SET SCREW
8	06504028	1	KEY
9	06504045	4	DOWEL PIN
10	------	1	NAMEPLATE
11	763759	2	THRUSTPLATE
12	02961940	1	HEX PLUG
13	TF4401	1	SNAP RING
14	06504049	1	LIP SEAL
15	TF4410	2	GASKET SEAL
16	06504046	4	SIDE SEAL
17	06504047	4	END SEAL
18	TF4407	2	BACK-UP SEAL
19	06504048	1	SEAL RETAINER
20	6T5809	2	CHECK ASSEMBLY
21	02961917	4	WASHER
------	06504023	-	SEAL KIT (INCLUDES 14, 15, 16, 17, AND 18)

50IN FLAIL DIRECT DRIVE MOTOR BREAKDOWN

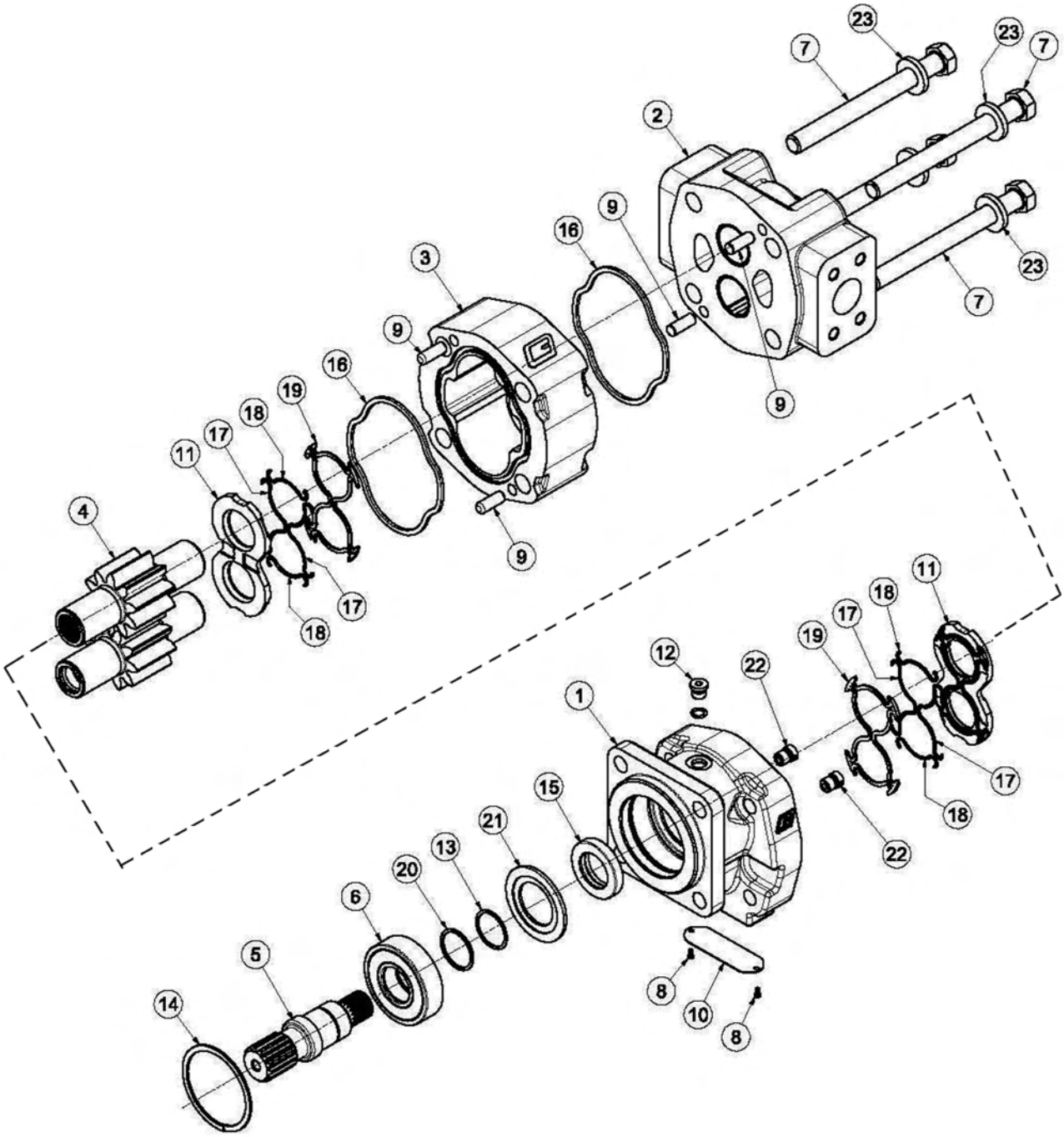

COMMON SABER

Continued...

ITEM	PART NO.	QTY.	DESCRIPTION
---	06504003	-	MOTOR ASSEMBLY,DIRECT DRIVE
1	06504039	1	HOUSING,SEC
2	06504040	1	HOUSING,PEC
3	06504041	1	HOUSING,GEAR
4	06504117	1	GEAR,SET
5	06504118	1	SHAFT,CONTINENTAL
6	TF4402	1	BRG,BALL
7	06504043	4	CAPSCREW
8	06504044	2	SCREW,DRIVE
9	06504045	4	PIN,DOWEL
10	06504077	1	NAME PLATE
11	763759	2	THRPL
12	02961940	1	PLUG,ODT
13	06504119	1	RING,SNAP
14	TF4401	1	RING,SNAP
15	06504120	1	SEAL,LIP
16	TF4410	2	SEAL,SQ-R
17	06504046	4	SEAL,SIDE
18	06504047	4	SEAL,END
19	TF4407	2	SEAL,BACK-UP
20	06504121	1	SPACER,BRG
21	06504122	1	RTNR,SEAL
22	6T5809	2	CHECK ASSY
23	02961917	4	WASHER
---	06504116	1	SEAL KIT - ITEMS 14 THRU 19 (NOT SHOWN)

50IN AND 60IN ROTARY MOTOR BREAKDOWN

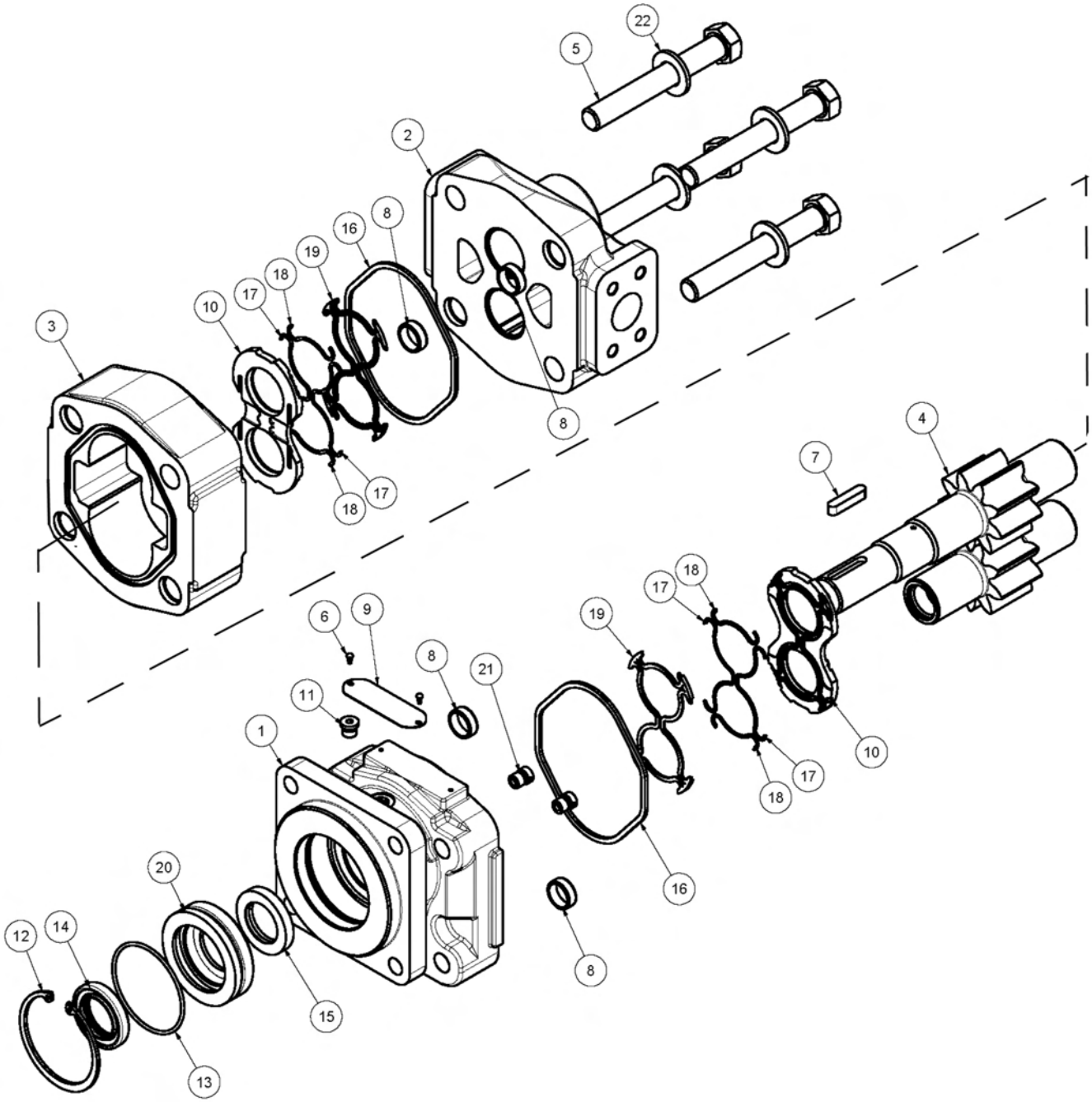

COMMON SABER

Continued...

ITEM	PART NO.	QTY.	DESCRIPTION
	06504011	-	MOTOR ASSEMBLY,TRB60
	06504012	-	MOTOR ASSEMBLY,TRB50
1	22790	1	HOUSING, SEC
2	06504088	1	HOUSING, PEC
3	06504062	1	HOUSING, GEAR,TRB60
------	06504089	-	HOUSING, GEAR,TRB50
4	06504090	1	SET, GEAR SHAFT
5	06504104	4	CAP SCREW,TRB60
------	06504091	-	CAP SCREW,TRB50
6	06504078	2	SCREW, DRIVE
7	06504092	1	KEY
8	06504093	4	PIN, DOWEL
9	06504094	1	NAME PLATE
10	06504095	2	THRPL
11	2961940	1	PLUG, ODT
12	2962200	1	RING, SNAP
13	06504096	1	O RING
14	6T5101	1	SEAL, LIP
15	06504097	1	SEAL, LIP
16	22797	2	SEAL, SQ-R
17	06504098	4	SEAL, SIDE CHAN
18	06504099	4	SEAL, END CHAN
19	06504100	2	SEAL, BK-UP
20	06504101	1	RTNR, SEAL
21	6T5809	2	CHECK ASS’Y
22	06504102	4	WASHER
------	06504103	-	SEAL KIT

COOLER ASSEMBLY

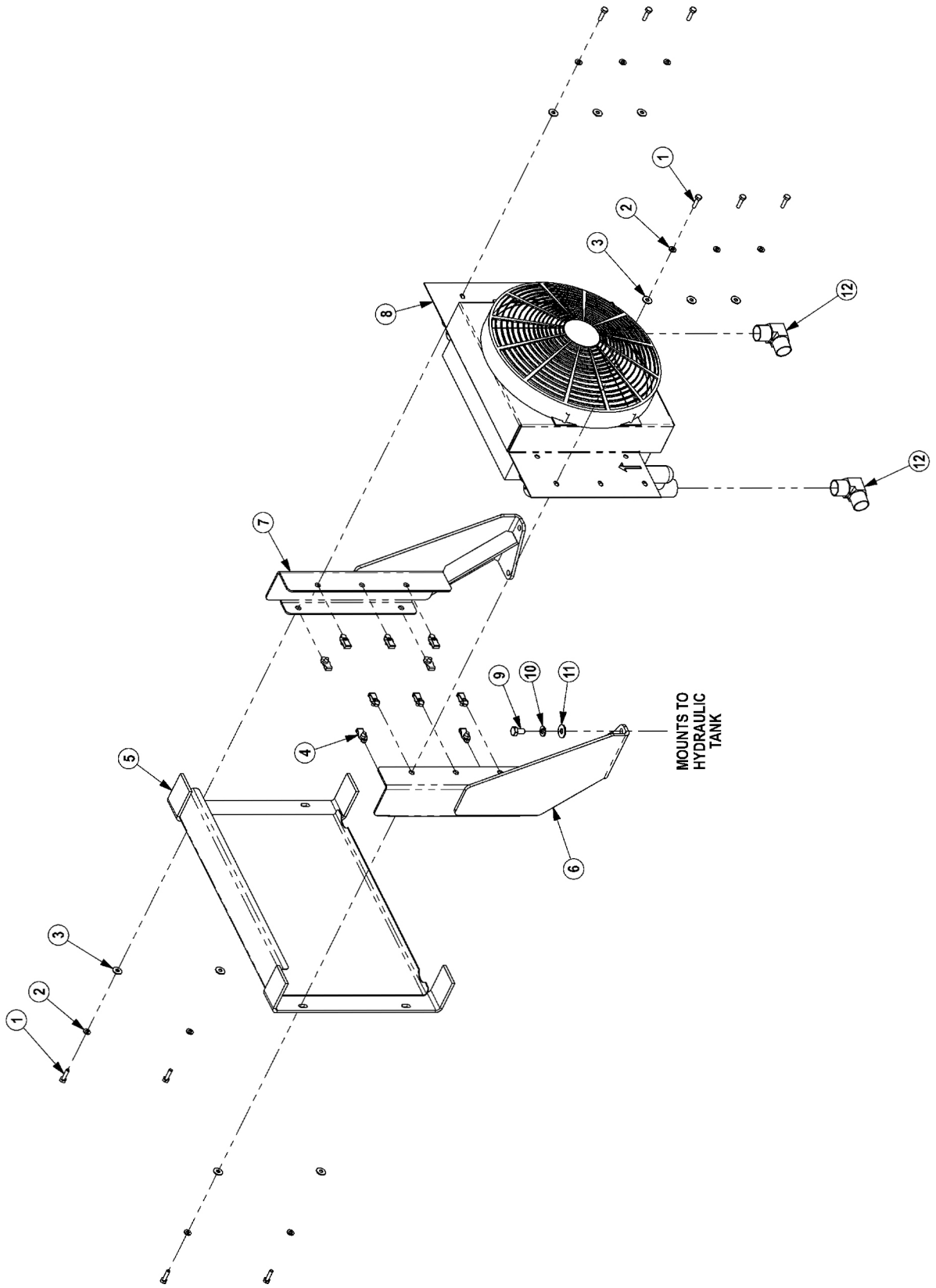

COMMON SABER

Continued...

ITEM	PART NO.	QTY.	DESCRIPTION
1	21530	10	CAPSCREW,1/4 X1 NC
2	21986	10	LOCKWASHER,1/4
3	22014	10	FLATWASHER,1/4
4	35176	10	1/4 U-NUT
5	06370015	1	SCREEN,COOLER,FRNT
6	06380006	1	MNT,COOLER,BUMPER TANK,RH
7	06380007	1	MNT,COOLER,BUMPER TANK,LH
8	06510026	1	COOLER,FRONT MNT
---	06510029	1	FAN ASSEMBLY ONLY
9	21629	4	CAPSCREW,3/8 X 3/4 NC
10	21988	4	LOCKWASHER,3/8
11	22016	4	FLATWASHER,3/8
12	34117	2	ELBOW,1MOR X 1MJ90,FORGED

CABLE (MANUAL) LIFT VALVE, 4 SPOOL - 06502104

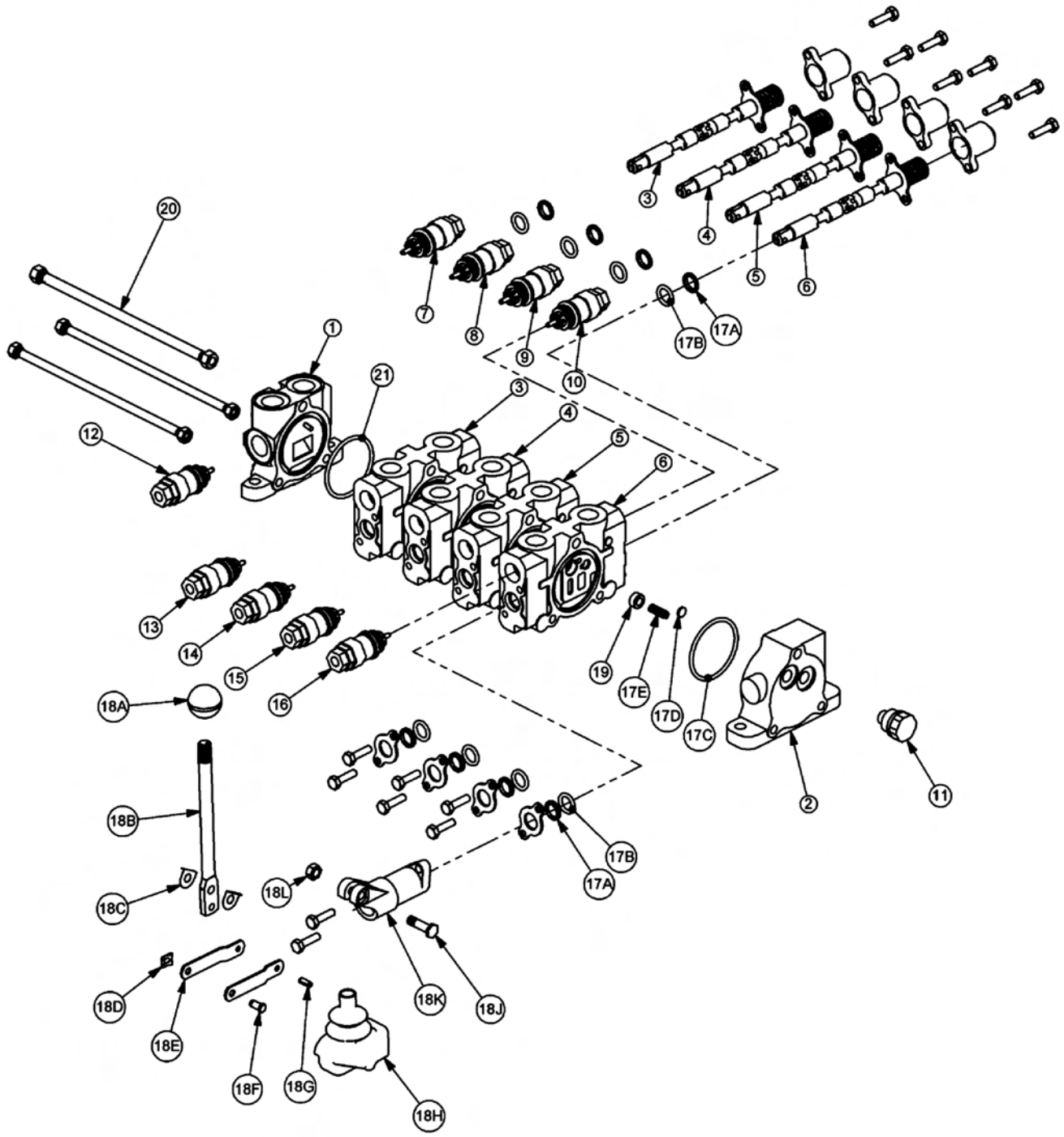

COMMON SABER

CABLE (MANUAL) LIFT VALVE, 4 SPOOL - 06502104

Continued...

ITEM	PART NO.	QTY.	DESCRIPTION
1	31595	1	INLET END COVER
2	31594	1	END COVER, LOAD SENSE
3	31597	1	VALVE SECTION (DOUBLE ACTING, CENTER SPRING)
4	31597	1	VALVE SECTION (DOUBLE ACTING, CENTER SPRING)
5	31600	1	VALVE SECTION (DOUBLE ACTING, DETENT-FLOAT)
6	31598	1	VALVE SECTION (DOUBLE ACTING, CENTER SPRING, METERED)
7	06503067	1	#10 O-RING PLUG
8	06502003	1	RELIEF VALVE, 2500 PSI
9	31862	1	RELIEF VALVE, 2175 PSI
10	TB1017H	1	RELIEF VALVE, 1750 PSI
11	06503068	1	#6 O-RING PLUG
12	6T4209	1	#10 O-RING PLUG
13	06502085	1	RELIEF VALVE, 3000 PSI
14	TB1017H	1	RELIEF VALVE, 1750 PSI
15	TB1017H	1	RELIEF VALVE, 1750 PSI
16	TB1017H	1	RELIEF VALVE, 1750 PSI
17	31593	4	VALVE SEAL KIT (FOR ONE SECTION)
17A	------	2	WIPER
17B	------	2	O-RING SMALL
17C	------	1	O-RING LARGE
17D	------	1	SHUTTLE DISC
17E	------	1	SPRING
18	TB1017L	4	LEVER KIT (FOR ONE SECTION)
18A	------	1	LEVER KNOB
18B	------	1	LEVER
18C	------	2	LEVER WASHER
18D	------	1	LEVER CLIP
18E	------	2	LINKAGE
18F	------	1	LEVER PIN
18G	------	1	ROLL PIN
18H	------	1	LEVER BOOT
18J	------	1	LEVER BOLT
18K	------	1	LEVER DUST COVER
18L	------	1	LEVER NUT
19	31603	4	COMPENSATOR
20	TB1017U	1	TIE ROD KIT
21	24214	1	O-RING, LARGE

CABLE (MANUAL) LIFT VALVE, 5 SPOOL - 06502103

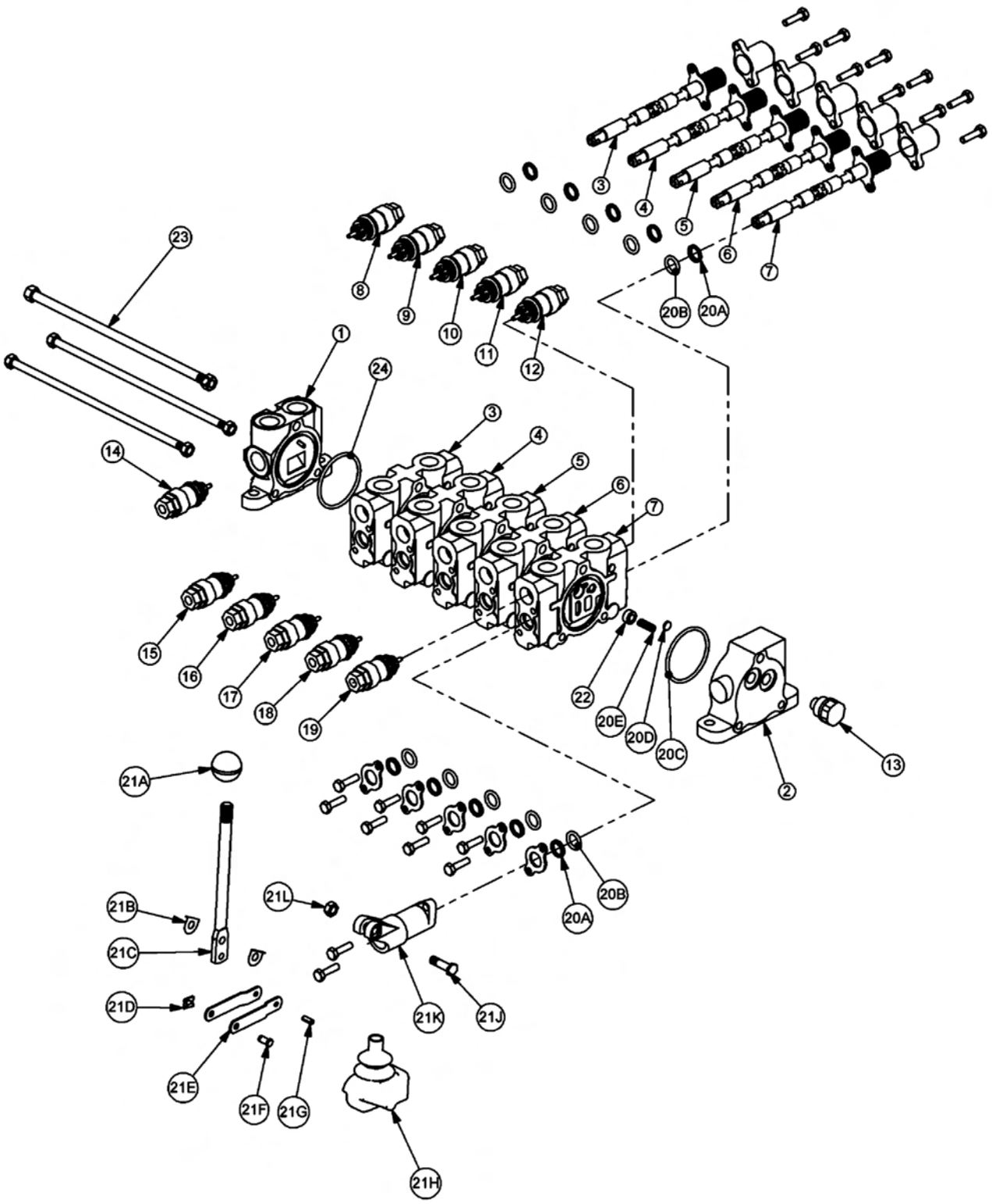

COMMON SABER

CABLE (MANUAL) LIFT VALVE, 5 SPOOL - 06502103

Continued...

ITEM	PART NO.	QTY.	DESCRIPTION
1	31595	1	INLET END COVER
2	31594	1	END COVER, LOAD SENSE
3	31597	1	VALVE SECTION (DOUBLE ACTING, CENTER SPRING)
4	31597	1	VALVE SECTION (DOUBLE ACTING, CENTER SPRING)
5	31597	1	VALVE SECTION (DOUBLE ACTING, CENTER SPRING)
6	31598	1	VALVE SECTION (DOUBLE ACTING, CENTER SPRING, METERED)
7	31597	1	VALVE SECTION (DOUBLE ACTING, CENTER SPRING) (REMOVE SHUTTLE DISC)
8	06503067	1	RELIEF PLUG, #10 O-RING
9	TB1017K	1	RELIEF VALVE, 2500 PSI
10	TB1017J	1	RELIEF VALVE, 2175 PSI
11	TB1017H	1	RELIEF VALVE, 1750 PSI
12	22588	1	RELIEF VALVE, 500 PSI
13	06503068	1	RELIEF PLUG, #6 O-RING
14	6T4209	1	RELIEF PLUG, #10 O-RING
15	06502085	1	RELIEF VALVE, 3000 PSI
16	TB1017F	1	RELIEF VALVE, 1750 PSI
17	TB1017F	1	RELIEF VALVE, 1750 PSI
18	TB1017H	1	RELIEF VALVE, 1750 PSI
19	22588	1	RELIEF VALVE, 500 PSI
20	31593	5	VALVE SEAL KIT (FOR ONE SECTION)
20A	------	2	WIPER
20B	------	2	O-RING SMALL
20C	------	1	O-RING LARGE
20D	------	1	SHUTTLE DISC
20E	------	1	SPRING
21	TB1017L	5	LEVER KIT (FOR ONE SECTION)
21A	------	1	LEVER KNOB
21B	------	1	LEVER
21C	------	2	LEVER WASHER
21D	------	1	LEVER CLIP
21E	------	2	LINKAGE
21F	------	1	LEVER PIN
21G	------	1	ROLL PIN
21H	------	1	LEVER BOOT
21J	------	1	LEVER BOLT
21K	------	1	LEVER DUST COVER
21L	------	1	LEVER NUT
22	31603	5	COMPENSATOR
23	TB1017V	1	TIE ROD KIT
24	24214	1	O-RING, LARGE

5 SPOOL ELECTRONIC VALVE - 06502096

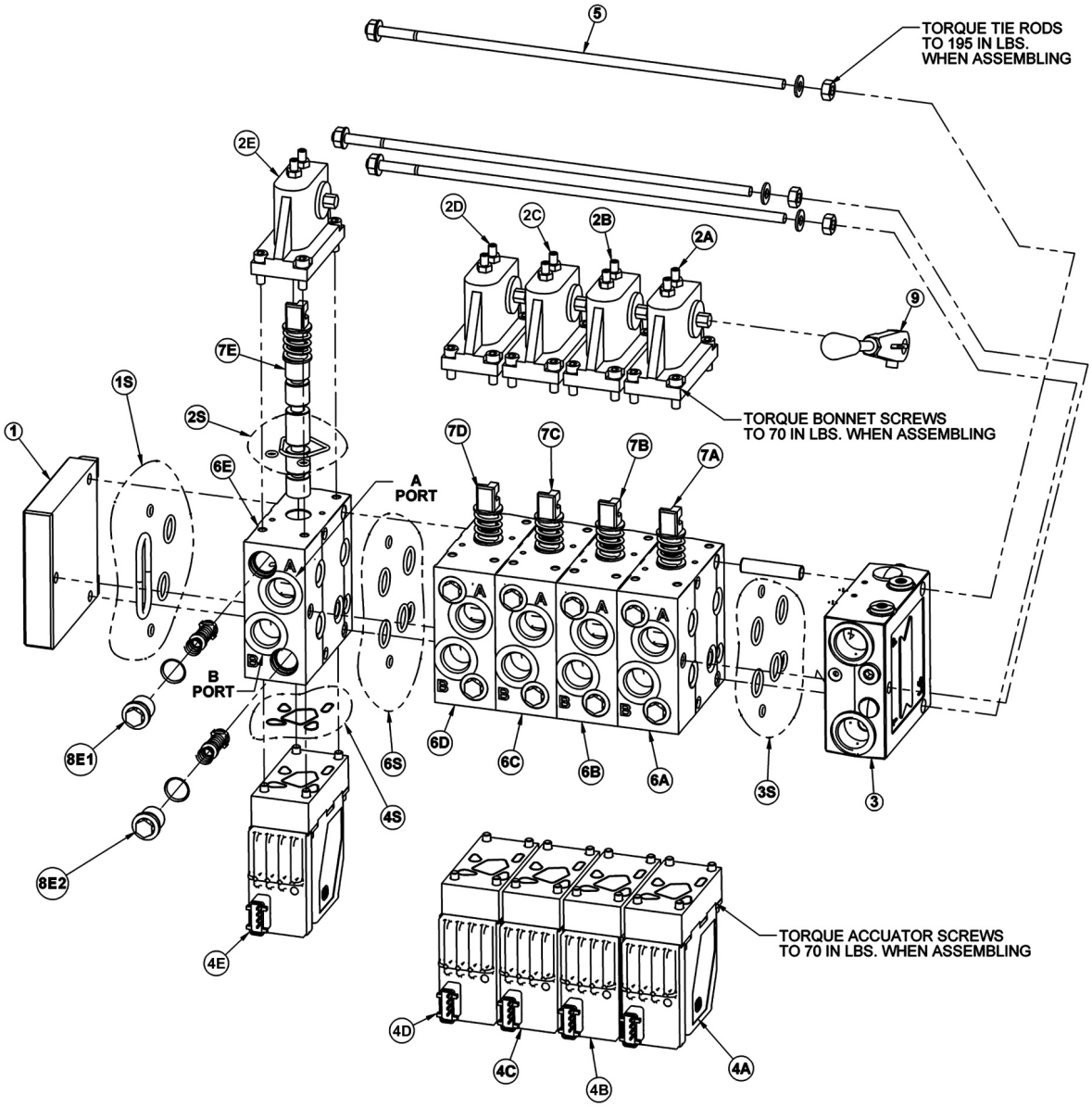

ITEM	PART NO.	QTY.	DESCRIPTION
------	06502146	-	VLV,5SP,32PVG,SABER
1	06502074	1	END PLATE
1S	06505013	1	END PLATE SEAL KIT
2	------	5	BONNET
2S	06505042	1	BONNET SEAL KIT
2A	42197	1	MAIN BOOM BONNET
2B	42197	1	SECONDARY BOOM BONNET
2C	42197	1	DECK ROLL BONNET
2D	42197	1	BOOM SWIVEL BONNET
2E	42197	1	DECK SHIELD BONNET

COMMON SABER

5 SPOOL ELECTRONIC VALVE - 06502096

Continued...

ITEM	PART NO.	QTY.	DESCRIPTION
3	34308	1	INLET SECTION
3S	06505013	1	INLET SECTION SEAL KIT
4	------	5	ELECTRONIC ACCUATOR
4A	06502101	1	MAIN BOOM ELECTRONIC ACCUATOR
4B	06502101	1	SECONDARY BOOM ELECTRONIC ACCUATOR
4C	06502100	1	DECK ROLL ELECTRONIC ACCUATOR
4D	06502101	1	BOOM SWIVEL ELECTRONIC ACCUATOR
4E	06502099	1	DECK SHIELD ELECTRONIC ACCUATOR
5	42202	1	TIE-BOLT KIT
6	------	5	SECTION
6S	06505013	1	SECTION SEAL KIT
6A	42698	1	MAIN BOOM SECTION
6B	42698	1	SEC BOOM SECTION
6C	06502076	1	DECK ROLL SECTION
6D	42698	1	BOOM SWIVEL SECTION
6E	06502077	1	SHIELD SECTION
7	------	5	SPOOL
7A	42697	1	MAIN BOOM SPOOL
7B	42697	1	SEC BOOM SPOOL
7C	4242106	1	DECK ROLL SPOOL
7D	06502073	1	BOOM SWIVEL SPOOL
7E	42201	1	DECK SHIELD SPOOL
8	------	10	ANTI CAV/SHOCK RELIEF
8A1	42650	1	MAIN BOOM A PORT RELIEF
8A2	06502069	1	MAIN BOOM B PORT RELIEF
8B1	42650	1	SEC BOOM A PORT RELIEF
8B2	42295	1	SEC BOOM B PORT RELIEF
8C1	42296	1	DECK ROLL A PORT RELIEF
8C2	42295	1	DECK ROLL B PORT RELIEF
8D1	42295	1	BOOM SWIVEL A PORT RELIEF
8D2	42295	1	BOOM SWIVEL B PORT RELIEF
8E1	06502069	1	DECK SHIELD A PORT RELIEF
8E2	06502069	1	DECK SHIELD B PORT RELIEF
9	33459	1	HANDLE

BRAKE VALVE ASSEMBLY

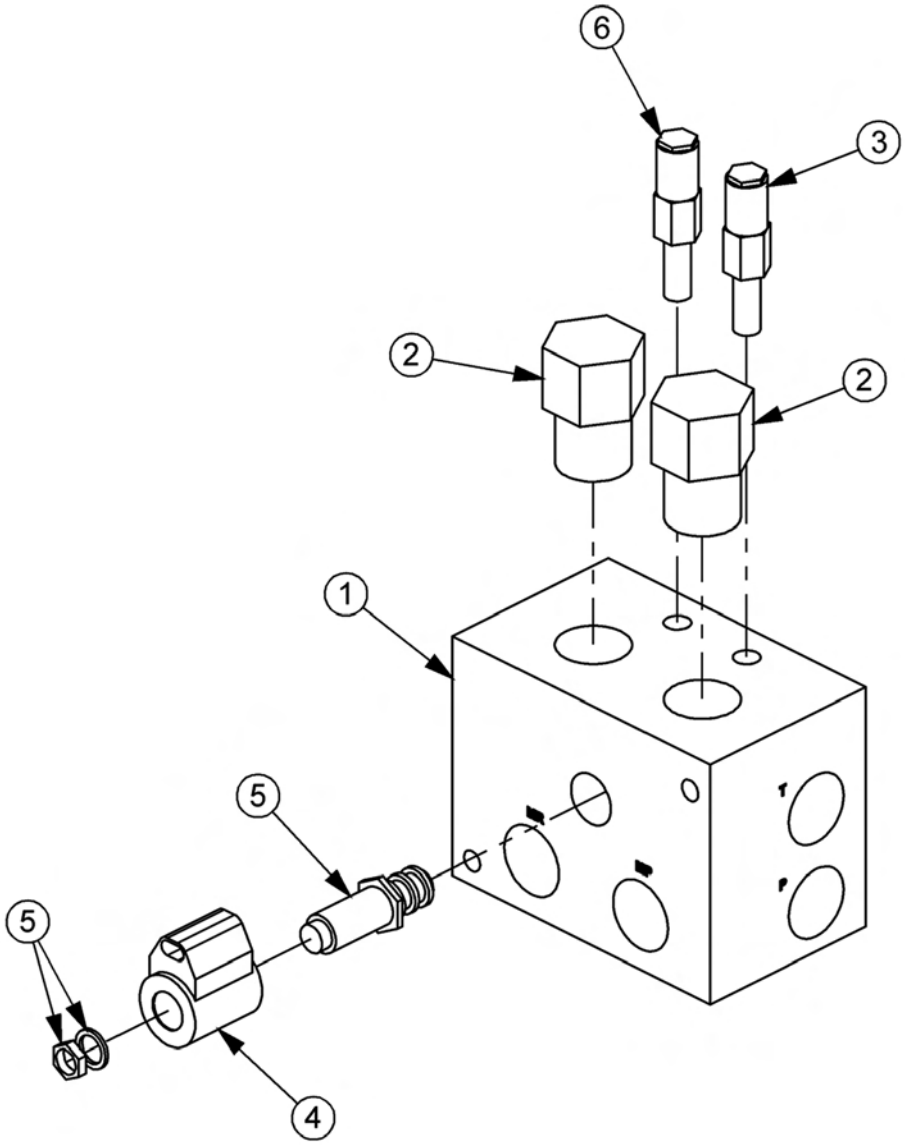

ITEM	PART NO.	QTY.	DESCRIPTION
---	06510084	1	BRAKE VALVE, ASSY
1	34092	1	BRAKE VALVE, BLANK
2	34094	2	LOGIC ELEMENT
3	34090	1	RELIEF VALVE, 3500 PSI
4	06510095	1	METRI PAK COIL
5	34093	1	CARTRIDGE, 2 POSITION, 3 WAY (WITH NUT & WASHER)
6	34091	1	RELIEF VALVE, 2600 PSI
---	34096	2	RELIEF SEAL KIT
----	34097	1	SOLENOID SEAL KIT
---	34098	2	ELEMENT SEAL KIT

COMMON SABER

BRAKE VALVE HYDRAULIC SCHEMATIC

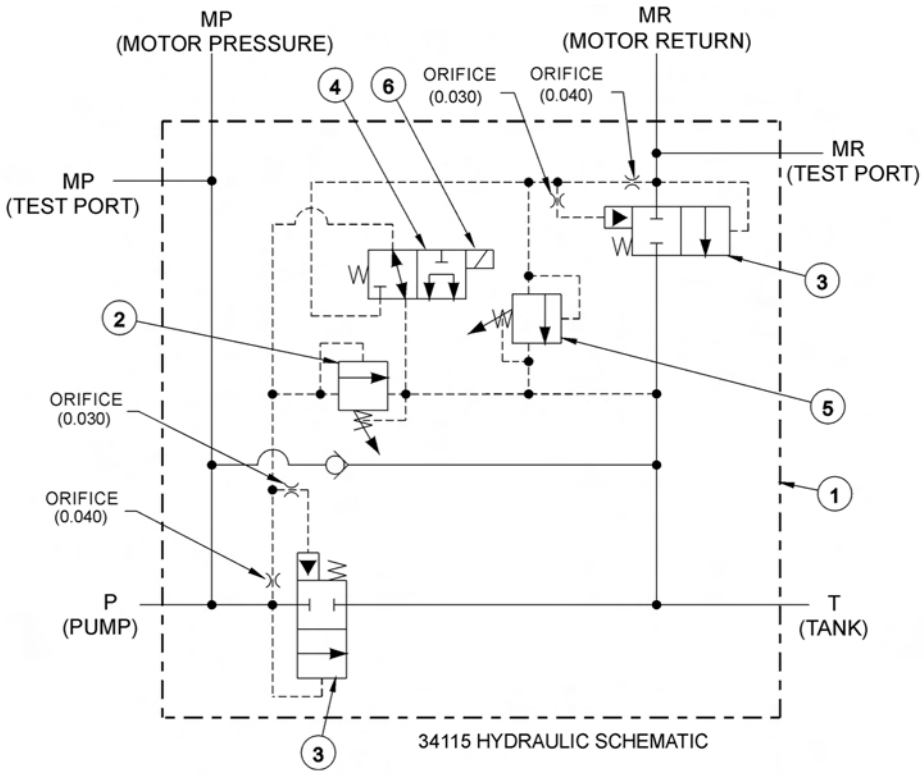

BRAKE VALVE TROUBLESHOOTING

FAILURE MODE:	CHECK STEPS
- MOWER WILL NOT START - system pressure is low (engine not lugging).	1 thru 6
- MOWER WILL NOT START - system pressure is high (engine lugging). "MR" port will be high pressure.	7
- MOWER WILL NOT ROTATE AT FULL SPEED - limited power.	3 thru 5
- MOWER BLADE WILL NOT STOP - blade will not stop in proper time.	7 thru 9

CORRECTIVE STEPS:

1. Check for voltage at solenoid (item 6), voltage must be between 10.2 volts and 13.8 volts.
2. Remove, inspect solenoid and cartridge (items 4, 6) for wear or contamination.
3. Remove, inspect logic elements near "P" port (item 3) for wear or contamination.
4. Remove, inspect 3000 psi relief valve (item 2) for wear or contamination.
5. Remove and inspect orifices near "P" port for contamination.
6. Remove "P" port hose and fitting, visually inspect for contamination, check ball for movement.
7. Remove and inspect orifices near "MR" port for contamination.
8. Remove, inspect 2600 psi relief valve (item 5) for wear of contamination.
9. Remove, inspect logic element near "MR" port (item 3) for wear or contamination.

SOLENOID SWITCH BOX AND WIRING

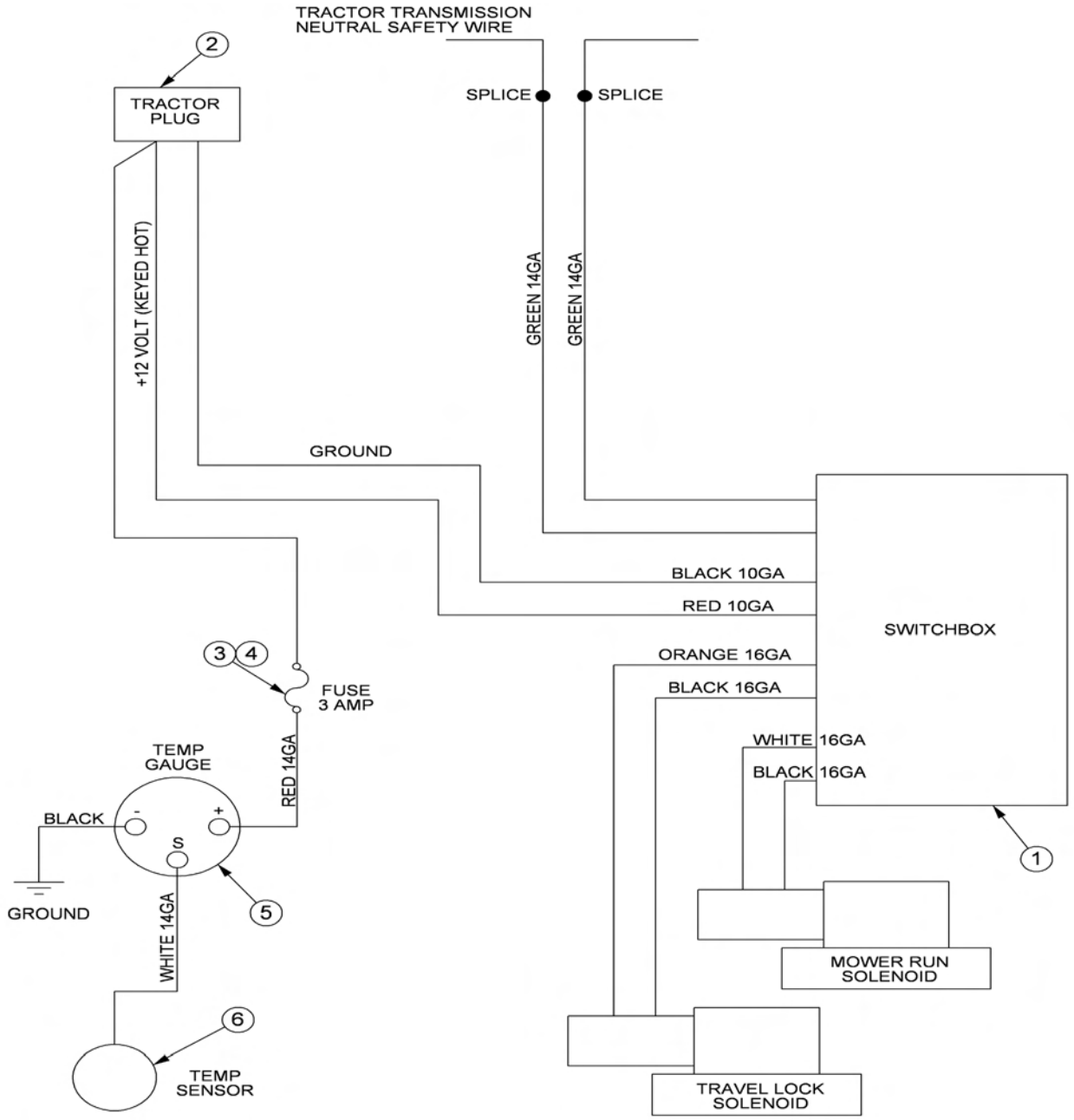

ITEM	PART NO.	QTY.	DESCRIPTION
1	------	-	SWITCH BOX
2	RE37651	1	PLUG,AUX PWR
3	24204	-	FUSE HOLDER,IN-LINE (OPTION)
4	6T3965	-	FUSE,3AMP (OPTION)
5	6T3934	-	TEMPERATURE GAUGE (OPTION)
6	6T3931	-	TEMPERATURE SENSOR (OPTION)

COMMON SABER

MANUAL LIFT VALVE SWITCH BOX

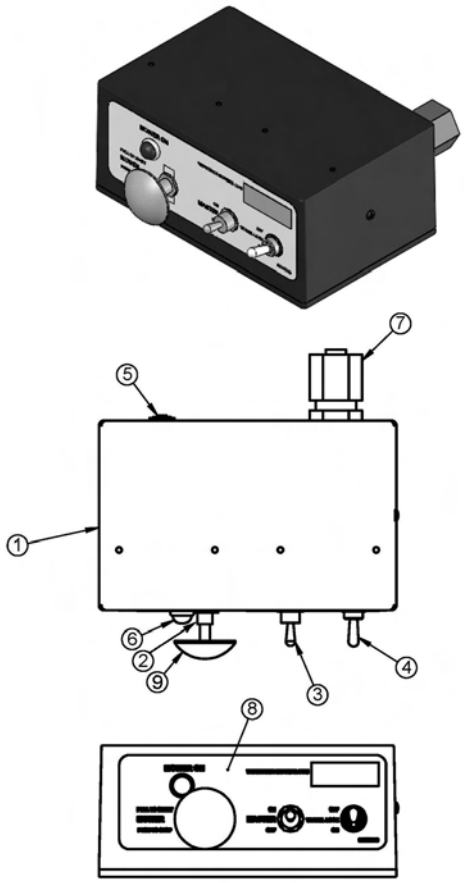

ITEM	PART NO.	QTY.	DESCRIPTION
1	06514012	1	SWBX,ALUM,BLK,06510100
2	35226	1	SWITCH,MOWER,COLEHERSEE
3	33811	1	SWITCH,MASTER/DECK FLOAT
4	34532	1	SWITCH,TRVL LCK
5	06514014	1	BREAKER,10A,SWBX
6	6T3923	1	INDICTATOR LIGHT,ON,RED
7	34540	1	STRAIN RELIEF,3/4,BLACK,NYLON
8	06550019	1	DECAL,SWTCHBX,BOOM,CG
9	02964063	1	KNOB,RED
10	35227	1	RELAY,DP,DT,12V,LY2F,35226

COMMON SABER

MANUAL LIFT VALVE SCHEMATIC

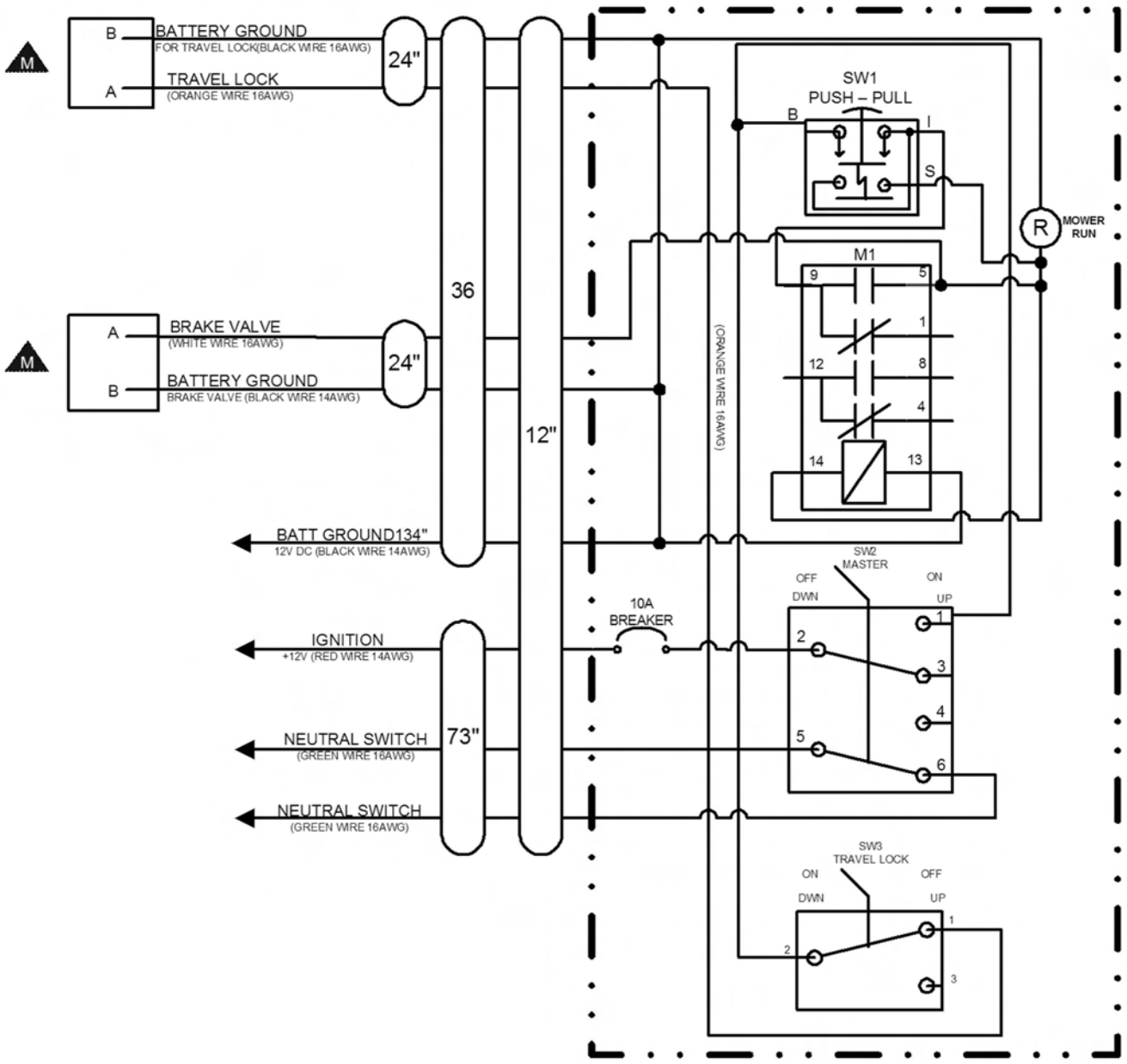

COMMON SABER

ELECTRONIC LIFT VALVE SWITCH BOX

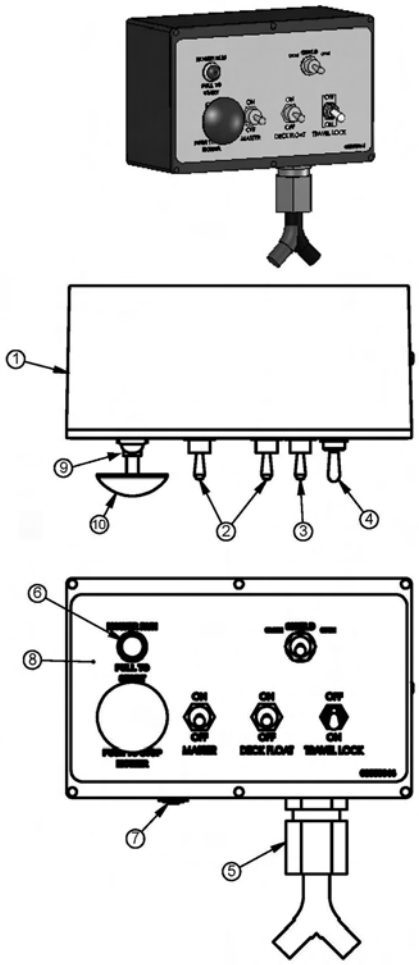

ITEM	PART NO.	QTY.	DESCRIPTION
1	06510196	1	SWBX,ASSY
2	33811	2	SWITCH,MASTER/DECK FLOAT
3	33813	1	SWITCH,SFTY SHIELD
4	34532	1	SWITCH,TRVL LCK
5	34540	1	STRAIN RELIEF,3/4",BLACK,NYLON
6	6T3923	1	INDICTATOR LIGHT,ON,RED
7	06514006	1	BREAKER,15A,SWBX
8	06550044	1	DECAL,SWBX,06510047
9	35226	1	SWITCH,MOWER,COLEHERSEE
10	02964063	1	KNOB,RED
11	35227	1	RELAY,DP,DT,12V,LY2F,35226

COMMON SABER

ELECTRONIC LIFT VALVE SCHEMATIC

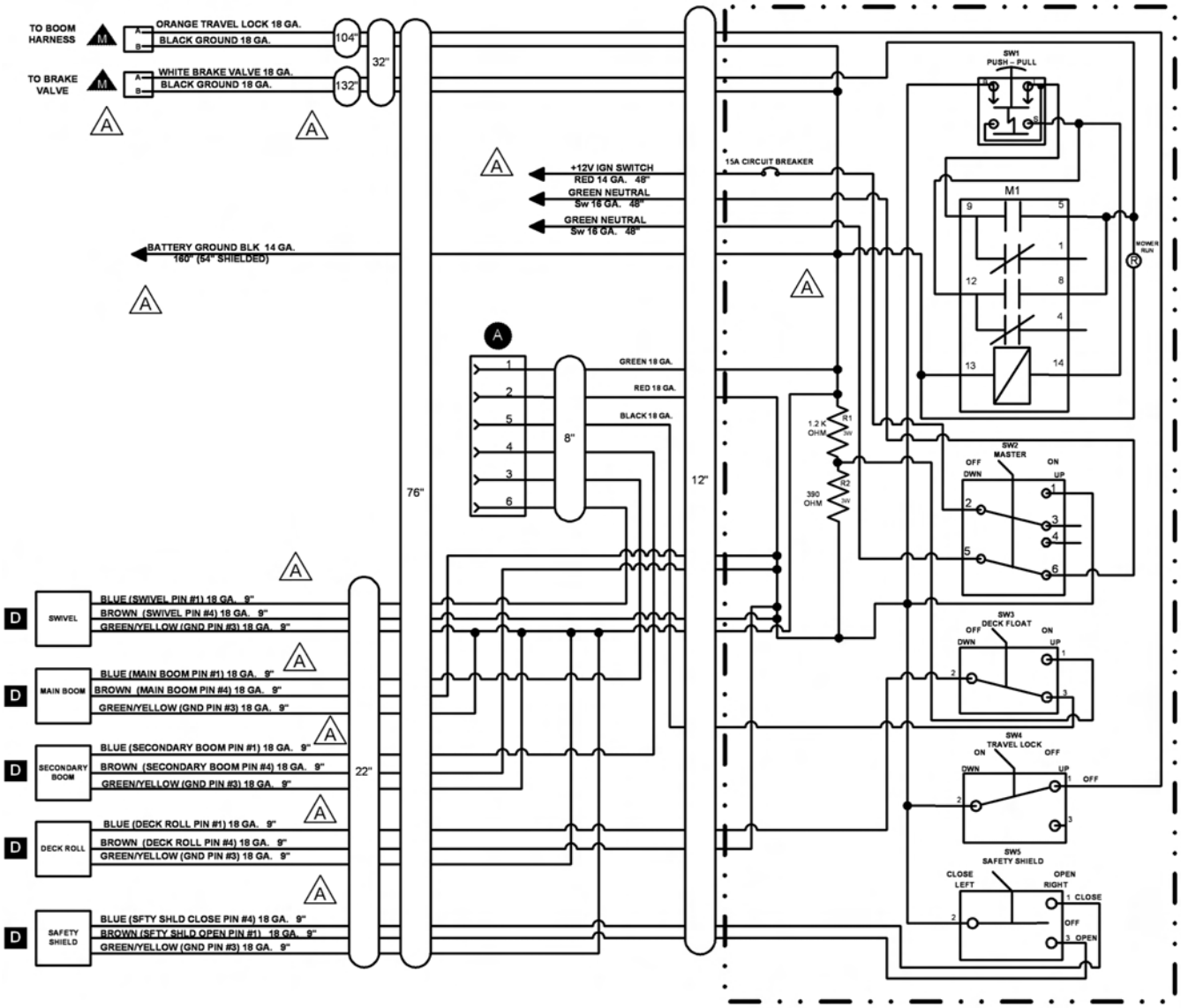

COMMON SABER

JOYSTICK SWITCHBOX SCHEMATIC

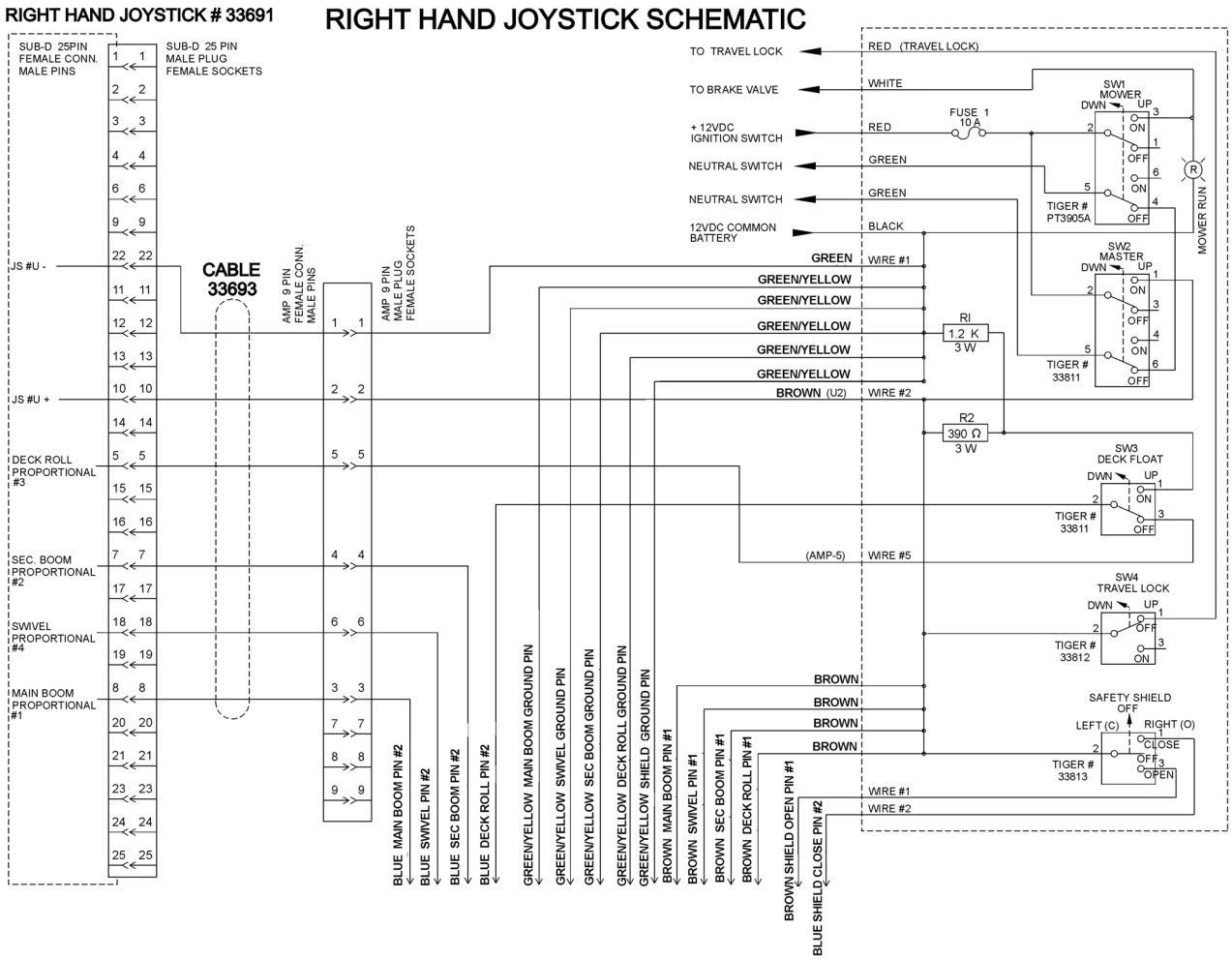

COMMON SABER

JOYSTICK TROUBLESHOOTING

Boom operation not responding to joystick movement.

Isolate hydraulic vs. electronic symptom.

Turn off electronic master switch (preventing electronic actuator on valve from attempting to hold spool in neutral position). With tractor engine running, operate the valve section with the manual handle. If function operates normally, continue with electronic inspection. If function does not operate normally, continue with hydraulic inspection.

Electronic inspection.

Connect a voltmeter to the cable connector of the valve section that is not operating. This will allow you to measure supply and signal voltage when the joystick is operated.

Main, Secondary, and Swivel Valves – signal voltage should be 50% of supply voltage with joystick in Neutral position, up to 75% of supply voltage in B direction, down to 25% of supply voltage in A direction. Signal voltage should change smoothly with lever movement.
Pin #1 – Supply VoltagePin #2 – Signal VoltagePin #gnd – ground

Deck Roll Valve or Float Valve – signal voltage should be 50% of supply voltage with joystick in Neutral position, up to 65% of supply voltage in B direction, down to 35% of supply voltage in A direction. Signal voltage should change smoothly with lever movement. Signal voltage should be approximately 75% of supply voltage when float switch is operated.
Pin #1 – Supply VoltagePin #2 – Signal VoltagePin #gnd – ground

Shield Valve or On/Off Valve – Voltage on pin #1 should be equal to supply voltage when switch is operated in A direction. Voltage on pin #2 should be equal to supply voltage when switch is operated in B direction.
Pin #1 – Signal VoltagePin #2 – Signal VoltagePin #gnd – ground

If none of the valve will operate with electrical signal, verify that there is oil pressure at the valve inlet. Electrical Valves must have pilot supply oil to move the spools.

Possible electronic problems.

Open circuit (broken wire, bad connection or loose connection in switch box).
Shorted to positive, ground, or other.
Incorrect voltage signal from joystick.

Continued on next sheet

Hydraulic inspection.

Install 3 pressure gauges, on the valve inlet (use M port, or tee into hose supplying oil from the pump to the inlet), on the workport that is not operating, and on the LS port.

With the spools in Neutral

Gear pump – P should be approximately 200 psi, LS = 0, workport – pressure on cylinder or function.
LS pump – P should equal pump standby pressure, LS = 0, workport – pressure on cylinder or function.
Pressure Comp pump – P should equal pump standby pressure, LS = 0, workport – pressure on cylinder or function.

Gear pump – P should be approximately 200 psi higher than LS, LS should equal workport, workport – pressure on cylinder or function.
LS pump – P should be LS + standby, LS should equal workport, workport – pressure on cylinder or function.
Pressure Comp pump – P should equal pump standby pressure, LS should equal workport, workport – pressure on cylinder or function.

Operate one spool, measure pressures with function at end of travel or stop

Gear pump – P should equal valve relief setting or workport shock valve setting. LS should equal workport. Workport should equal relief setting or workport shock valve setting.
LS pump – P should equal valve relief setting, pump max pressure setting, or workport shock valve setting. LS should equal workport. Workport should equal relief setting, pump max pressure setting, or workport shock valve setting.
Pressure Comp pump – P should equal pump standby pressure, LS should equal workport. Workport should equal pump standby pressure or workport shock valve setting.

Operate more than one spool.

Gear pump – P should approximately 200 psi higher than LS. LS should equal highest workport pressure. Workport – pressure on cylinder or function.
LS pump – P should be LS + standby pressure. LS should equal highest workport pressure. Workport – pressure on cylinder or function.
Pressure Comp pump. P should equal pump standby pressure. LS should equal highest workport pressure. Workport – pressure on cylinder or function.

Possible hydraulic problems.

Cylinder leak.
LS signal leaking to tank before reaching pump LS port.
Hydraulic system or pump not supplying flow to valve.

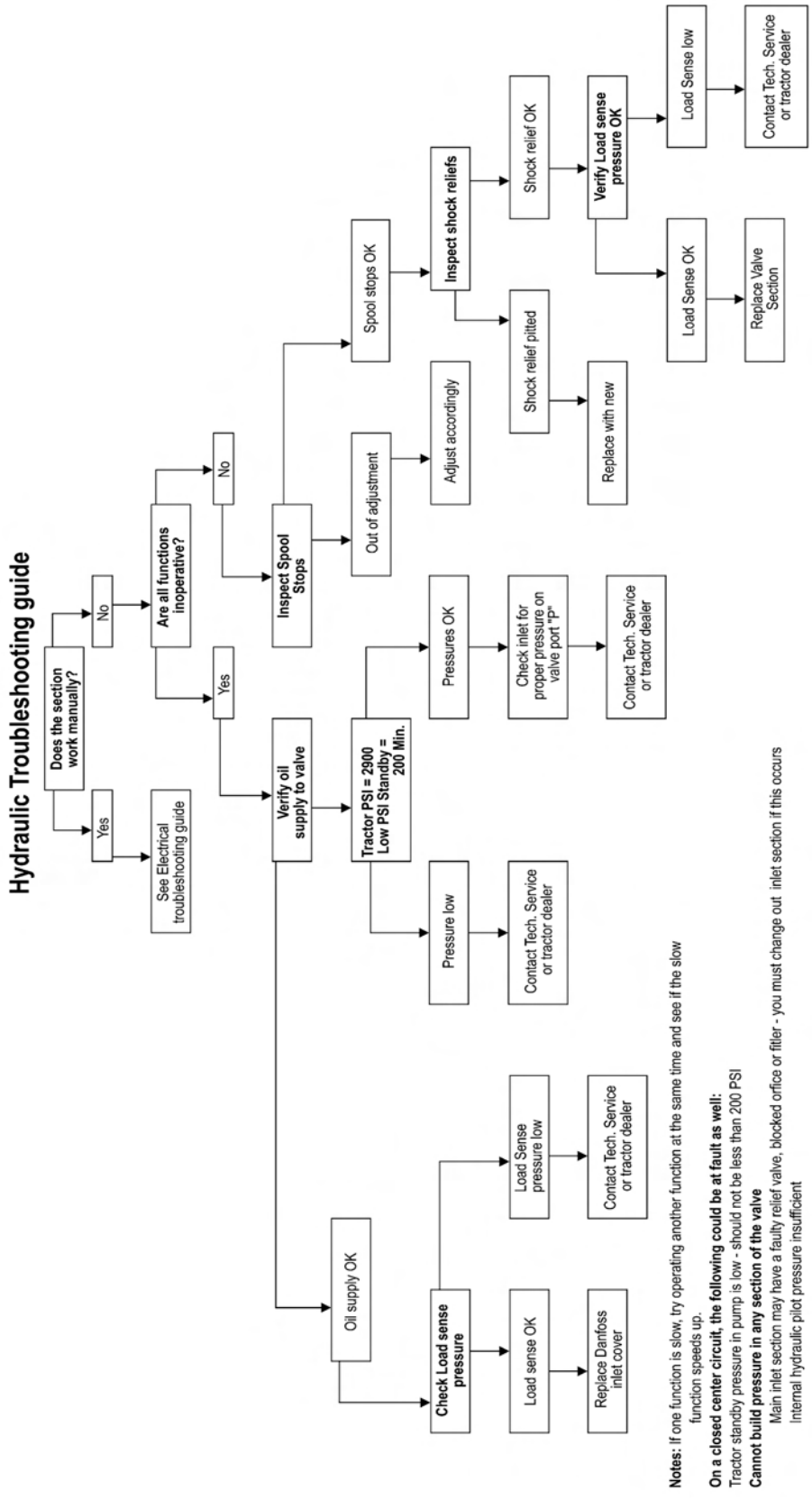

COMMON SABER

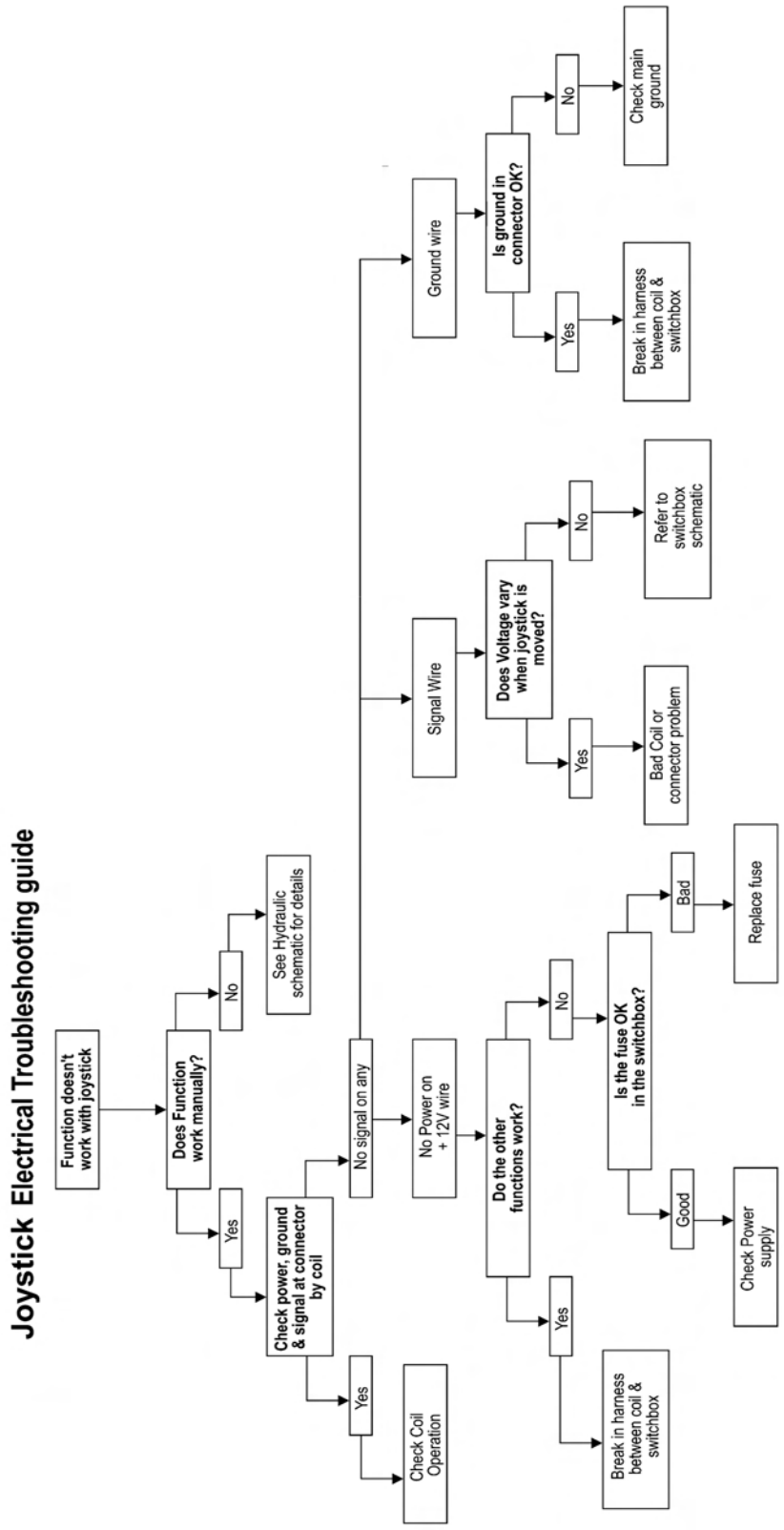

COMMON SABER

NOTES

CLEAN CUTTER SECTION

CAUTION!

Failure to follow the following warnings and instructions may result in serious injury or damage to the equipment or property!

CAUTION!

WARNING: The blade alone weighs approximately 145 lbs. Be sure its weight can be supported before attempting to replace. The use of a lift mechanism will ease replacement.

CLEAN CUTTER BLADE MOUNTING

The CLEAN CUTTER blade was designed for installation onto a standard SABER spindle. It is equipped with replaceable carbide tipped teeth. Carbide is very hard, it will chip or break on inpact. Handle the saw blade with care. **DO NOT** roll saw on any hard surface or allow it to strike a hard object. Set it down on a piece of belting or wood to avoid damaging carbide tips. Install two temperary(2) threaded studs into (2) opposite holes in the spindle. Align the bolt holes in adapter (part number 34767) with the studs and slide adapter over studs, be sure to index adaper so as the protruding 2 7/8" diameter pilot on the adapter faces outward away from spindle. Then slide the saw blade (part number 33874) over the studs and onto the 2 7/8" diameter pilot of the adapter. **NOTE:** Orient blade for clockwise rotation (blade rotates clockwise when looking down on top of mower deck). Then slide the collar (part number 34768) over the studs with the chamfered edge of collar to the outside, be sure the counterbore bolt holes face outward. Apply Loctite "271" to the threads of the 3/4-16 x 3 1/4" UNF Grade 8 bolts (part number 34769), and install lock washers (part number 21993) onto the bolts, then install bolts through collar, blade, and adapter into the spindle. Remove the threaded studs, and replace with bolts and lockwashers. Torque bolts in an alternating pattern to 298 Ft-lbs.

DANGER!

Never work under the Implement, the framework, or any lifted component unless the Implement is securely supported or blocked up to prevent sudden or inadvertent falling which could cause serious injury or even death. (SG-14)

DANGER!

Never operate the Tractor or Implement until you have read and completely understand this Manual, the Tractor Operator's Manual, and each of the Safety Messages found in the Manual or on the Tractor and Implement. Learn how to stop the tractor engine suddenly in an emergency. Never allow inexperienced or untrained personnel to operate the Tractor and Implement without supervision. Make sure the operator has fully read and understood the manuals prior to operation. (SG-4)

OPERATING INSTRUCTIONS

Inspect clean cutter saw before each use. Re-torque spindle bolts to 331 Ft-lbs. Inspect blade around collar and near the teeth for bends and cracks. Check for loose, broken, chipped, dull of missing teeth. Tighten all loose teeth by hammering and or replacing rivets. If teeth are broken, chipped, or missing or if blade is cracked or becomes bent remove blade and have it repaired at an approved service center. Call Tiger Service Department for replacement parts and service.

The SABER Clean Cutter is intended for clean cutting trees and brush up to eight (8) inches in diameter maximum. Turn mower "ON" while tractor is running at idle RPM. Then increase tractor speed to 1,950 RPM maximum. Note, this tractor engine speed produces a mower speed of 1,500 RPM. **DO NOT operate the clean cutter mower at speeds in exess of 1,500 RPM.** If saw blade wobbles in exess of two (2) inches while tractor is idling, **STOP**, remove the blade and have it repaired an an approved service center. Call Tiger Service Department for replacement parts and service.

Allow saw to accelerate to maximum speed before moving into foliage. Advance mower head smoothly in foliage. Allow saw to cut through material, do not force or over feed. If saw slows excessively, move the head out of the foliage, and allow the saw to achieve maximum speed. **DO NOT** move up or down or roll mower head while cutting through heavy foliage. **DO NOT** use clean cutter mower on the ground. The saw blade is equipped with carbide tips, which are very hard. Striking rocks, steel, concerte, or other similar debris will break these tips.

Badly worn teeth increase stress to the saw blade and require more horsepower to cut than sharp teeth. Set-up a scheduled maintenance program for the saw before the teeth are dull. The saw will last longer, product a better cut, cut large diameter foliage without binding, and will cost less to operate.

Check adapter and collar every time saw is changed, maintain the .004 inch taper on face (surface against the saw blade) of these two (2) items. Always clean adapter and collar before mounting the blade. If adapter or collars are worn or damaged, they must be replaced.

Familiarize yourself with the machines operation and correct operating safety precautions.

WARNING!

Excessive wobble will generate heat in the blade, rapidly accelerating the loss of tension. The overheated blade will then rub against the foliage as it is cutting, again increasing the heat in the blade and intensifying the wobble. The blade may then weaken, crack and eventually fail. **NEVER RUN A BLADE THAT IS CRACKED OF BENT.**

DANGER!

Always keep a careful lookout and use extreme care when working around overhead obstructions. Never allow the Mower head or boom within 10 feet of any power line. When working close to overhead power lines consult your electric company for a safe code of operation. (SBM-7)

WARNING!

Do not put hands or feet under mower decks. Blade Contact can result serious injury or even death. Stay away until all motion has stopped and the decks are securely blocked up. (SGM-9)

DANGER!

Never operate the Tractor and Mower Unit without an OPS (Operators Protective Structure) or Cab to prevent injury from objects thrown from ground or from overhead trimming. Stop mowing if workers or passersby are with in 100 yards. (SBM-9)

WARNING!

CAUTION: Never leave the key in the ignition switch. Also personal injury or death can occur from sudden dropping or inadvertent operation of the controls. Make certain the area is clear before lowering or raising the deck.

MAINTENANCE INSTRUCTIONS

Inspect clean cutter saw before each use. Re-torque spindle bolts in an alternating pattern to 331 ft-lbs. Check for loose, broken, chipped, dull or missing teeth. Tighten all loose tooth assemblies by hammer and or replacing rivets. If teeth tips are broken, chipped, or missing, replace tip or replace entire tooth assembly. **NEVER RUN SAW BLADE WITH MISSING TOOTH ASSEMBLY.** If saw blade is cracked, becomes bent or wobbles in excess of two (2) inches while the tractor is idling, **STOP**, remove blade and have it repaired at an approved service center. Call Tiger Service Department for replacement parts and service.

These saw blades are pre-tensioned after the tooth assemblies are riveted in place. This pre-tensioning ensures that the blade runs true and remains true under normal cutting load. Removal of more than one or two complete tooth assemblies at a time may effect the tensioning of the blade. Before cutting always check for wobble while machine is running at idle. If blade wobbles in excess of two (2) inches, **STOP**, remove blade and have it repaired at an approved service center. The teeth tips can be replaced without removing the tooth bodies from the saw blade (see TIP REPLACEMENT PROCEDURE). This method is preferred over the entire removal of tooth assemblies.

Check adapter and collar every time saw is changed, maintain the .004 to .006 inch taper (see figure below) on inside face (surface against saw blade) of these two (2) items. Always clean inside face of adapter and collar before mounting the blade. If adapter or collars are worn, chipped, or damaged, they must be replaced.

Any saw blade (regardless of condition) that has seen regular use should be serviced at least once a year at an approved service center.

Spare saw blades should be stored in a dry environment and transported only on the wooden crates that are supplied with the saw blade.

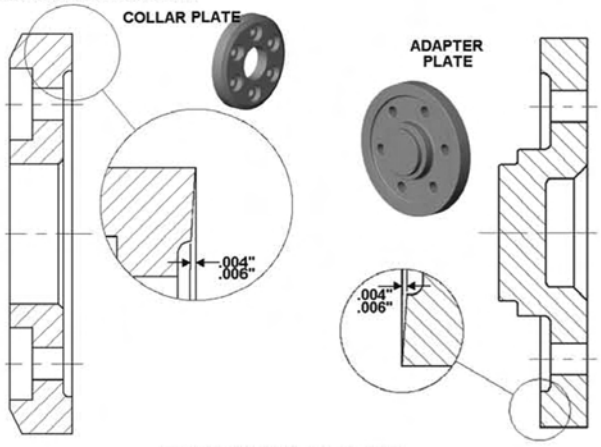

CLEAN CUTTER BLADE AND TEETH PARTS

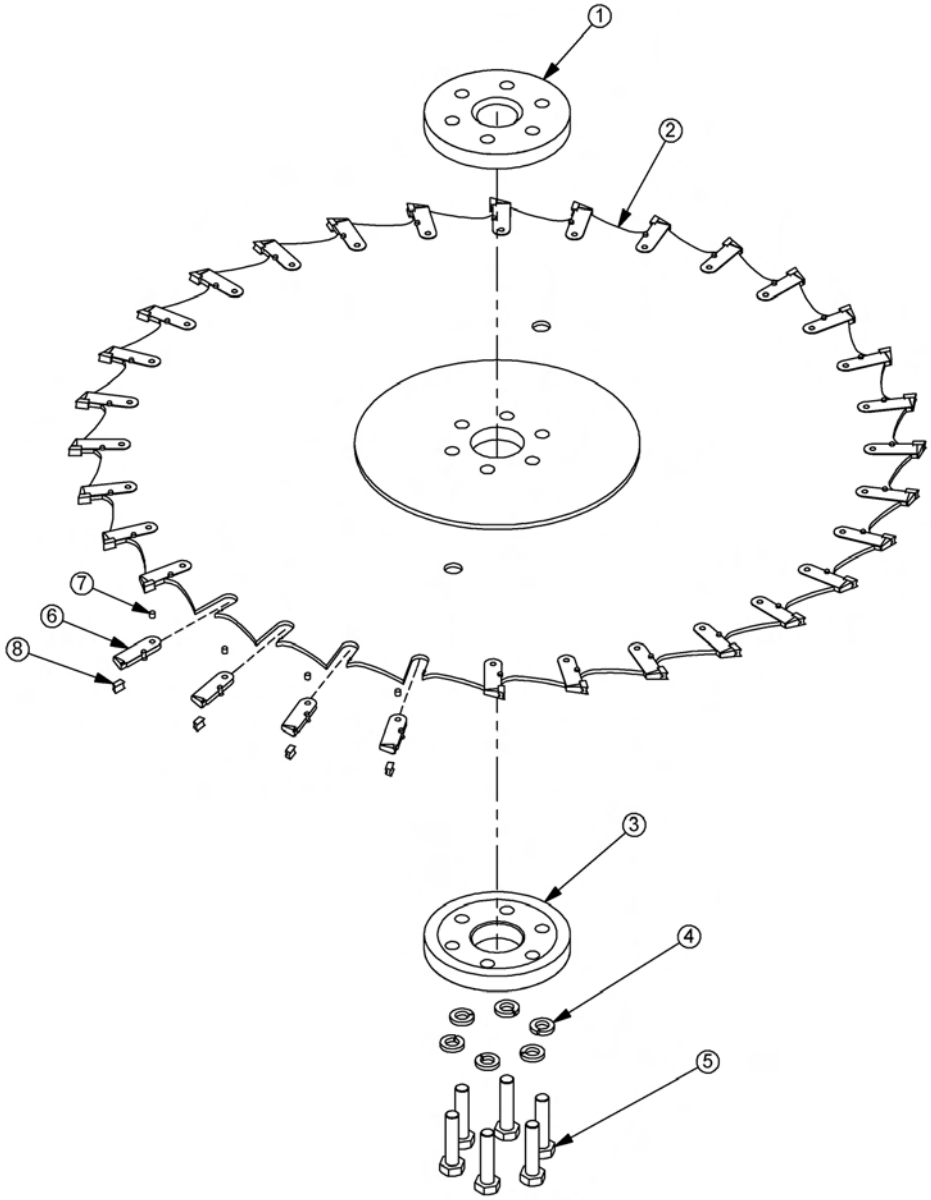

ITEM	PART NO.	QTY.	DESCRIPTION
1	06420025	1	ADAPTER,SAW,SABER,RNFRCD
2	06520224	1	BLADE, 48” SAW WITH TEETH
3	06420038	1	COLLAR,SAW,SABER
4	33380	6	FLATWASHER,3/4",GR8,SAE
5	06530210	6	CAPSCREW,5/8" X 3-3/4",NF,GR 8
6	06520225	30	TOOTH WITH RIVET, SAW BLADE
7	34703	30	TOOTH RIVET, SAW BLADE
---	34704	-	RIVET REMOVER TOOL (NOT SHOWN)
8	34702	30	TOOTH TIP, SAW, CARBIDE
---	34705	-	SHARPENING TOOL (NOT SHOWN)

COMMON SABER

CARBIDE TIP REPLACEMENT

1. Heat face of tip to dull orange, remove tip, then brush tooth body clean of all debris (carbon).
2. Apply acetone to socket rail on tooth body and allow it to evaporate. Dab on soldering paste (black flux) to socket rail of tooth body and slide pre-tinned tip into place.
3. Then heat tip sides and base of socket rail to ensure silver solder flows completely around base of tip. Grasp tip with tweezers and gently twist tip back and forth to ensure complete bonding of silver solder.
4. Discontinue heat, and allow to cool. Then check braze by gently tapping tip with rubber mallet.

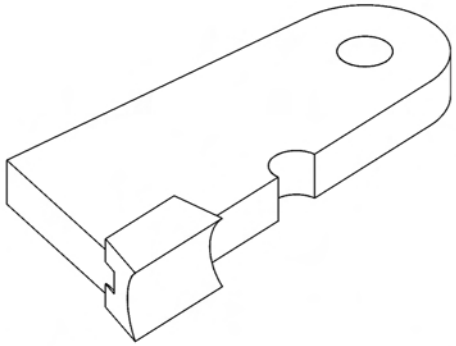

VIEW OF ASSEMBLED TOOTH

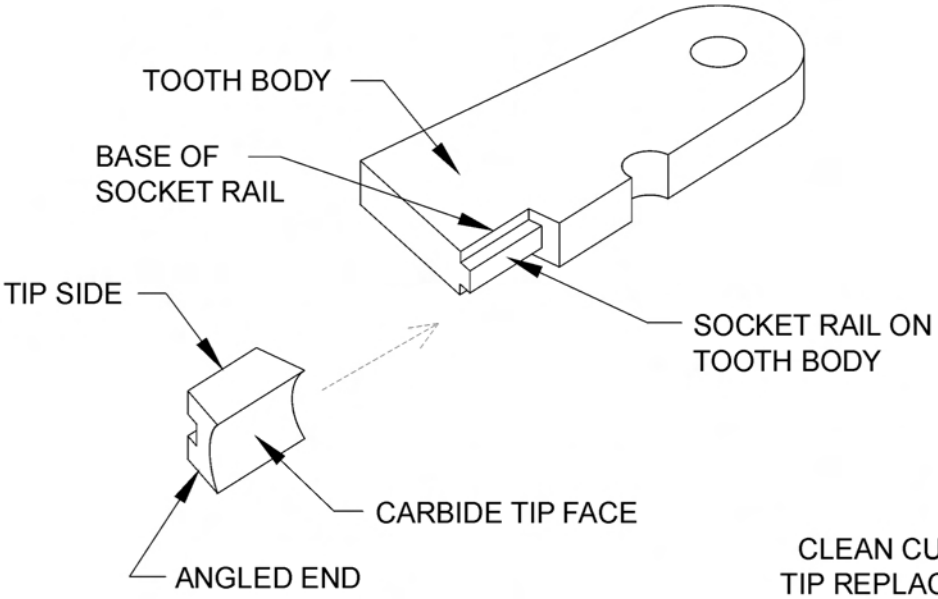

CLEAN CUTTER TIP REPLACEMENT

NOTES

FIRE SUPPRESSION SYSTEM SECTION

FIRE SUPPRESSION 3-POINT MOUNT

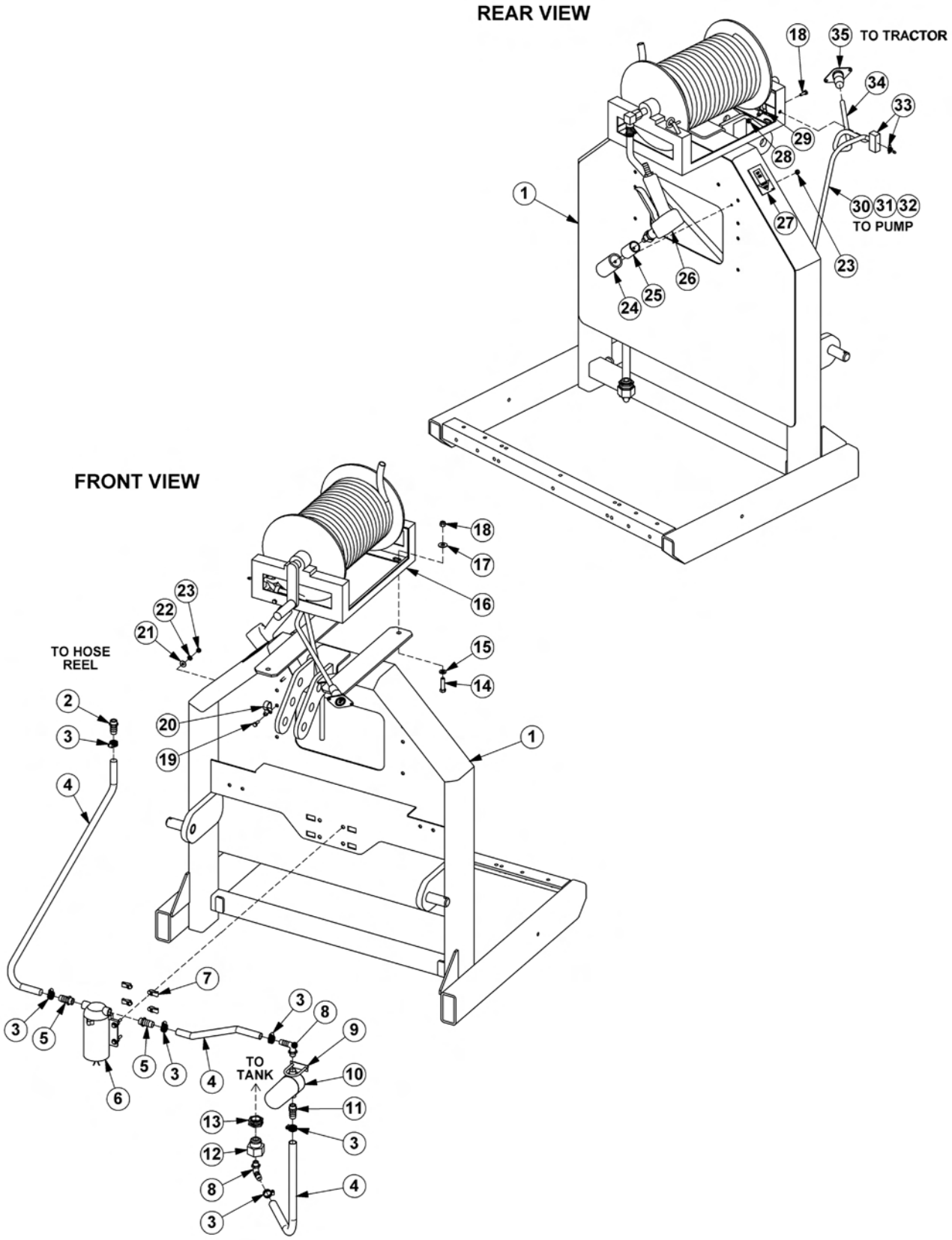

COMMON SABER

Continued...

ITEM	PART NO.	QTY.	DESCRIPTION
1	06370137	1	MOUNT,3PNT,FIRE SYS
2	06503108	1	FITTING,1/2"BARB X 1/2"MP
3	35091	6	CLAMP,HOSE,#6
4	06520469	5	HOSE,1/2",BULK (FEET)
5	06503168	2	SWIVEL,1/2"STR,POLY
6	06520359	1	PUMP,LARGE
7	35176	4	U-NUT,1/4"
8	06520367	2	ELBOW,1/2"BARB X 1/2"MP,POLY
9	27329	1	U-BOLT,1/4"
10	06520361	1	FILTER
---	06520351	1	ELEMENT,FILTER
11	06520349	1	FITTING,BARB,HOSE
12	06503169	1	REDUCER,BUSHING (100 & 150 GALLON TANKS ONLY)
13	06520346	1	FITTING,BULKHEAD (50 GALLON TANKS ONLY)
14	21632	4	CAPSCREW,3/8" X 1-1/2",NC
15	21988	4	LOCKWASHER,3/8"
16	06520360	1	HOSE REEL
17	22016	4	FLATWASHER,3/8"
18	21627	4	NYLOCK NUT,3/8",NC
19	21529	2	CAPSCREW,1/4" X 3/4",NC
20	06510258	1	CLAMP,3/4"
21	22014	1	FLATWASHER,1/4"
22	21986	1	LOCKWASHER,1/4"
23	21525	2	HEX NUT,1/4",NC
24	06370121	1	HOLSTER
25	06430090	1	SLEEVE
26	06520366	1	GUN,FIRE SYS
27	6T3222	1	DECAL
28	21527	1	NYLOCK NUT,1/4",NC
29	06510257	1	CLAMP,3/8"
30	28055	5	WIRE,BLACK,14GA (FEET)
31	24200	5	WIRE,RED,14GA (FEET)
32	22802	5	WIRE WRAP (FEET)
33	PT3905A	1	SWITCH
34	06510256	4	CABLE,14GA,4WIRE (FEET)
35	06510255	1	PLUG,7PIN,TRCTR

FIRE SUPPRESSION FRONT MOUNT

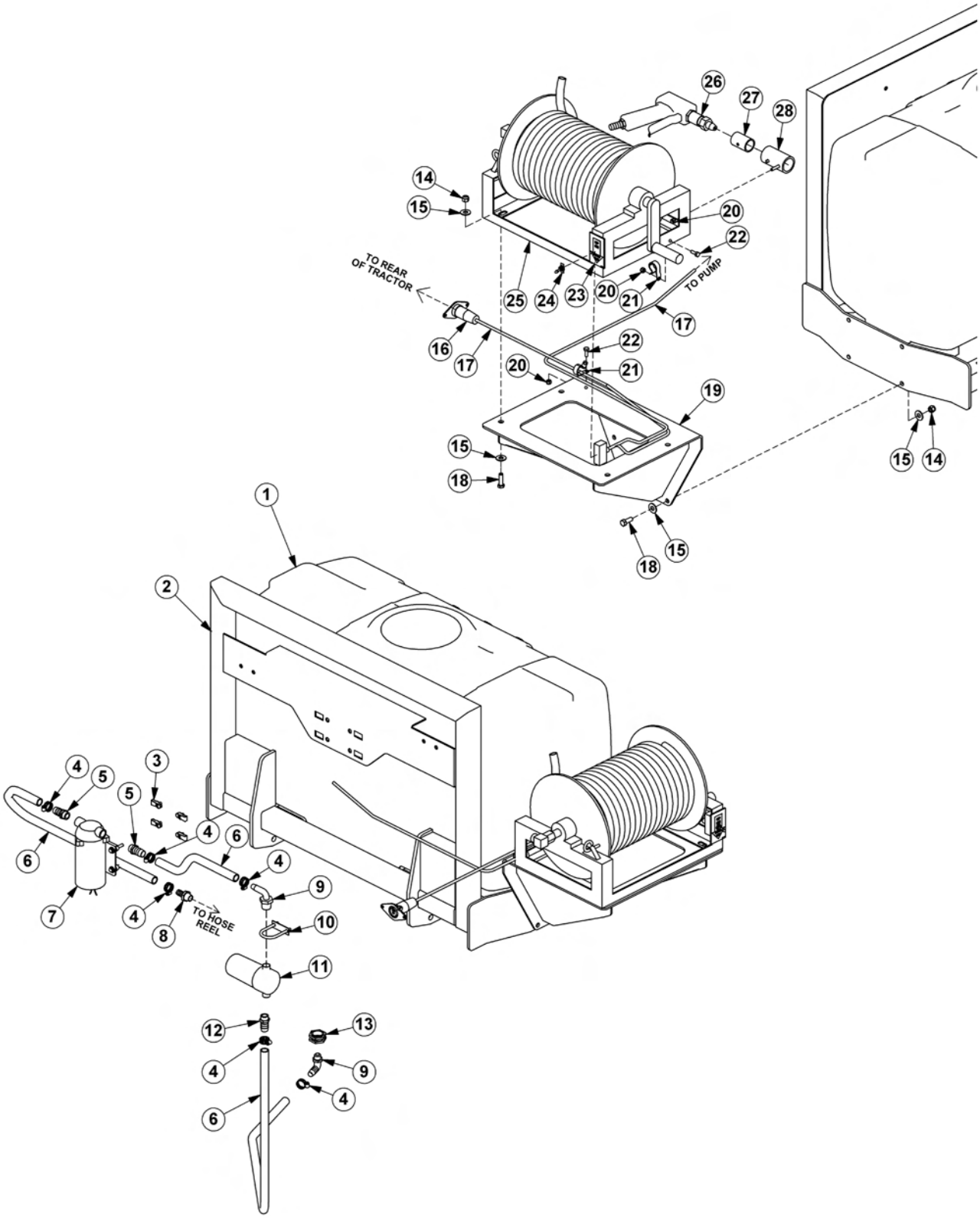

COMMON SABER

Continued...

ITEM	PART NO.	QTY.	DESCRIPTION
1	06520342	1	TANK,50 GALLON
2	06370204	1	MNT,TANK,FRNT,50 GALLON
3	35176	4	U-NUT,1/4,3/4 TO CENTER
4	35091	6	CLAMP,HOSE,#6
5	06503168	2	SWIVEL,1/2 STR,POLY
6	06520469	8	HOSE,1/2,SPRAYER
7	06520359	1	PUMP,FIRE KIT
8	06503108	1	FITTING,1/2"BARB X 1/2"MP
9	06520367	2	ELBOW,1/2MPX1/2BARB,POLY
10	27329	1	U-BOLT,1/4X2X1
11	06520361	1	FILTER,FIRE KIT,RAILKUT
---	06520351	1	STRAINER,40 MESH
12	06520349	1	FITTING,BARB,HOSE,WETCUT
13	06520346	1	FITTING,BULKHEAD
14	21627	8	NYLOCK NUT,3/8 NC
15	22016	16	FLATWASHER,3/8,GR8
16	06510255	1	PLUG,7PIN,TRCTR
17	06510256	22	WIRE,14GA,4WIRE (FEET)
18	21631	8	CAPSCREW,3/8X1 1/4, NC,GR8
19	06370207	1	MNT,FIRE SUPPRESSION
20	21527	3	NYLOCK NUT,1/4 NC
21	06510257	2	CLAMP,3/8X1/4,INS
22	21529	2	CAPSCREW,1/4 X 3/4 NC
23	6T3222	1	DECAL,CONTROL,ON-OFF SWITCH
24	PT3905A	1	SWITCH,MOWER
25	06520360	1	HOSE REEL,FIRE KIT,RAILKUT
26	06520366	1	GUN,FIRE KIT,RAILKUT
27	06430090	1	SLEEVE,GUN,FIRE SYS
28	06370121	1	HOLSTER,FIRESYS,RAILKUT

FIRE SUPPRESSION SYSTEM ELECTRICAL SCHEMATIC

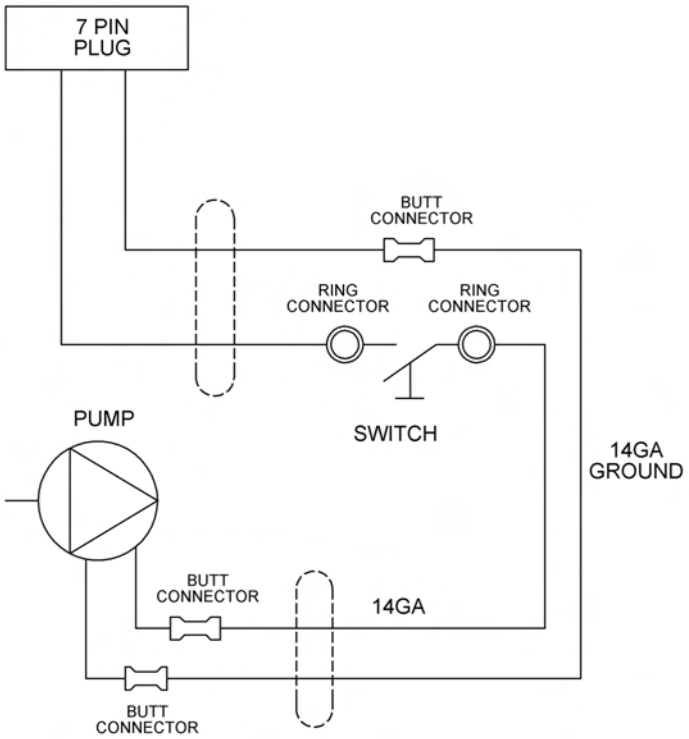

COMMON SABER

WETCUT SECTION

WETCUT 50 GALLON TANK - 3PNT MOUNT

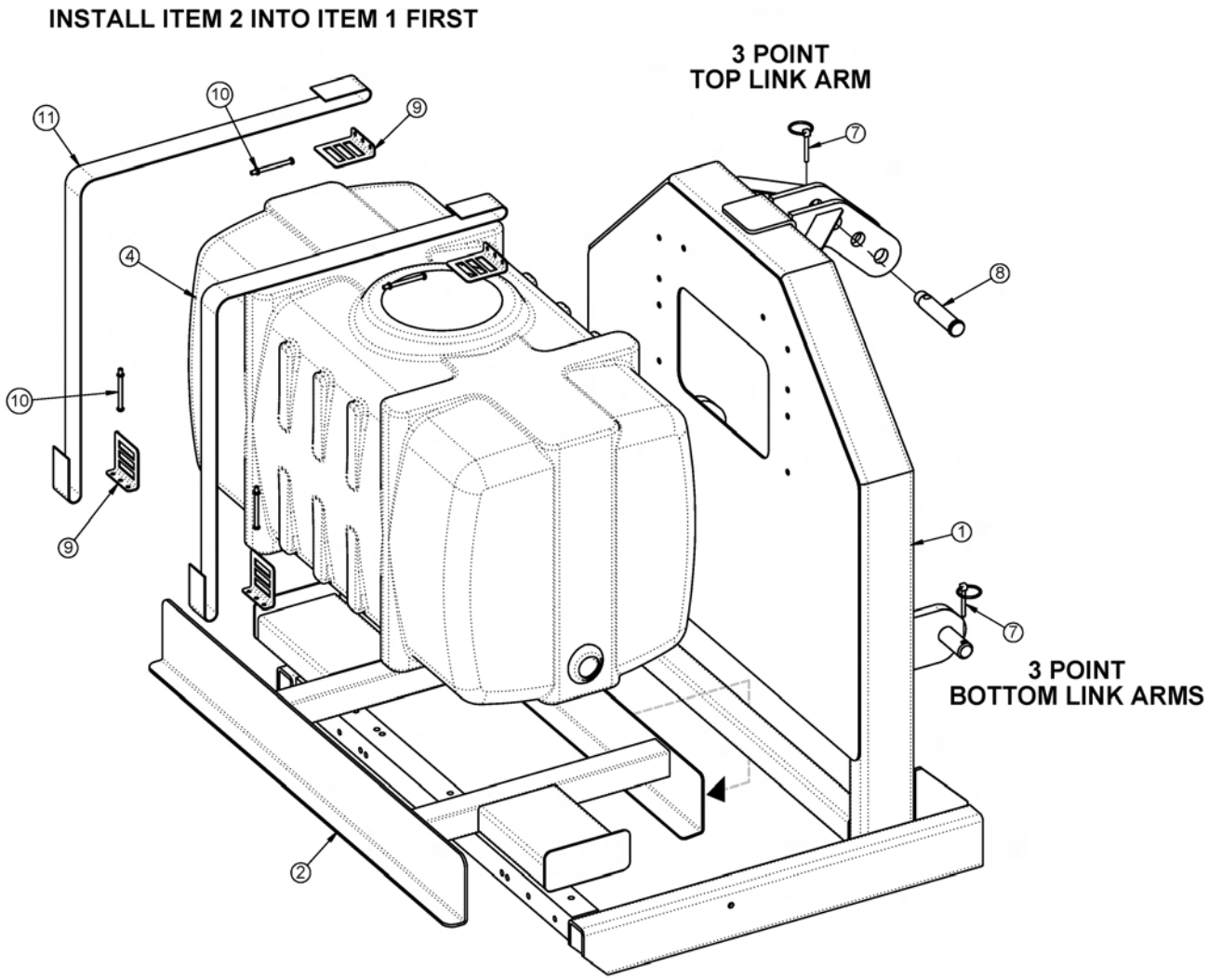

ITEM	PART NO.	QTY.	DESCRIPTION
1	06370128	1	MNT,3PNT,UNI
2	06370136	1	MNT,TANK,50GAL,WETCUT
4	06520342	1	TANK,50GA.,WETCUT
7	RD1032	3	PIN,LYNCH 1/4" X 2"
8	TB1036	1	PIN,SEC BOOM SWIV 1X4-11/16"
9	06520343	4	ANCHOR,STRAP,WETCUT
10	06520344	4	BOLT,STRAP,TANK,WETCUT
11	06520345	2	STRAP,TANK,WETCUT

COMMON SABER

WETCUT 100 OR 150 GALLON TANK - 3PNT MOUNT

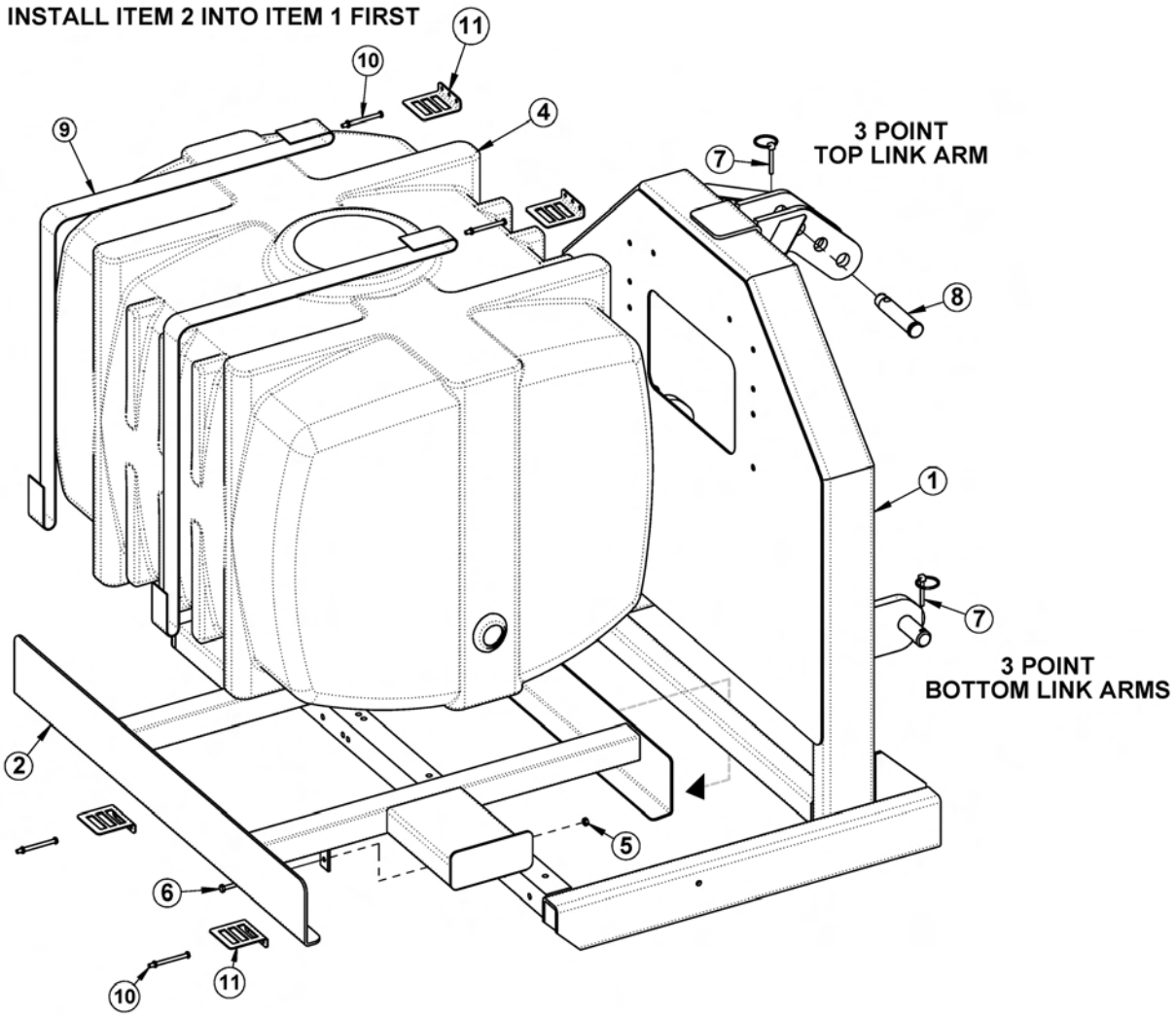

ITEM	PART NO.	QTY.	DESCRIPTION
1	06370128	1	MNT,3PNT,UNI
2	06370138	1	MNT,TANK,100GAL,WETCUT
------	06370139	-	MNT,TANK,150GAL,WETCUT
4	06520372	1	TANK,100GA.,WETCUT
------	06520373	-	TANK,150GA.,WETCUT
5	21527	2	HEX NUT,NYLOCK,1/4" NC
6	21530	2	CAPSCREW,1/4" X 1" NC
7	RD1032	3	PIN,LYNCH 1/4" X 2"
8	TB1036	1	PIN,SEC BOOM SWIV 1X4-11/16"
9	06520345	2	STRAP,TANK,WETCUT
10	06520344	4	BOLT,STRAP,TANK,WETCUT
11	06520343	4	ANCHOR,STRAP,WETCUT

COMMON SABER

WETCUT 3PNT PLUMBING - 50IN MOWERS

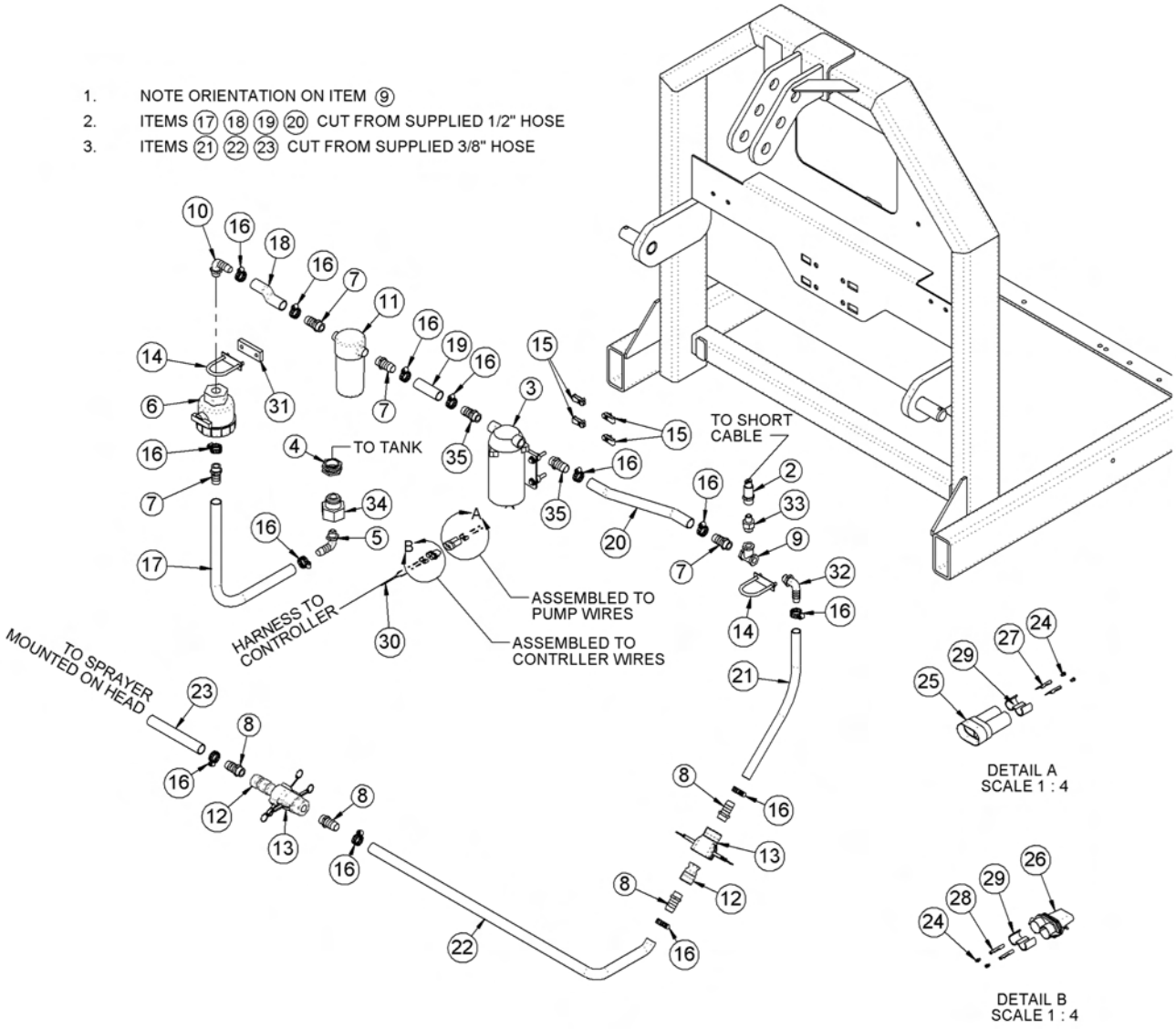

COMMON SABER

Continued...

ITEM	PART NO.	QTY.	DESCRIPTION
1	06370128	1	MNT,3PNT,UNI
2	06520336	1	CNTRLR,SENSOR,06520333
3	06520341	1	PUMP,WETCUT
4	06520346	1	FITTING,BULKHEAD,WETCUT (50 GALLON TANKS ONLY)
5	06520347	1	FITTING,ELBOW,WETCUT
6	06520348	1	VLV,BALL,WETCUT
7	06520349	4	FITTING,BARB,HOSE,WETCUT
8	06503173	4	FITTING,1/2MP X 3/8"BARB
9	06520353	1	FITTING,TEE,WETCUT
10	06520367	1	ELBOW,1/2" X 1/2"BARB,POLY
11	06520361	1	FILTER,FIRE KIT,RAILKUT
12	06520400	2	QUIK CPLR,MALE,1/2",WETCUT
13	06520401	2	QUIK CPLR,FEM,1/2",WETCUT
14	27329	2	U-BOLT,1/4" X 1" X 2"
15	35176	4	U-NUT,1/4",3/4" TO CENTER
16	35091	13	CLAMP, HOSE #6
17 - 20	06520469	5	1/2" HOSE (FEET)
21 - 23	06520316	-	3/8" HOSE (INCLUDED WITH SPRAYER)
24	06510051	4	SEAL,16-18GA,METPAK
25	06510052	1	CONN.,BODY,MALE,METRIPACK 150
26	06510053	1	CONN.,BODY,FEM,METRIPACK 150
27	06510054	2	TERMINAL,MALE,16/18GA.METPAK
28	06510055	2	TERMINAL,FEM,16/18GA.METPAK
29	06510056	2	TPA
30	06520337	1	INCLUDED WITH CONTROLLER
31	06401133	1	SPACER,Ø.31" X 1.75" X .38"
32	06503165	1	ELBOW,1/2"MP X 3/8"BARB
33	06520354	1	BUSHING,REDUCER,WETCUT
34	06503169	1	BUSHING,1"MP X 1/2"FP (100 & 150 GALLON TANKS ONLY)
35	06503176	2	FITTING,BARB,3/8"MP X 1/2"BARB

WETCUT 3PNT PLUMBING - LARGE MOWERS

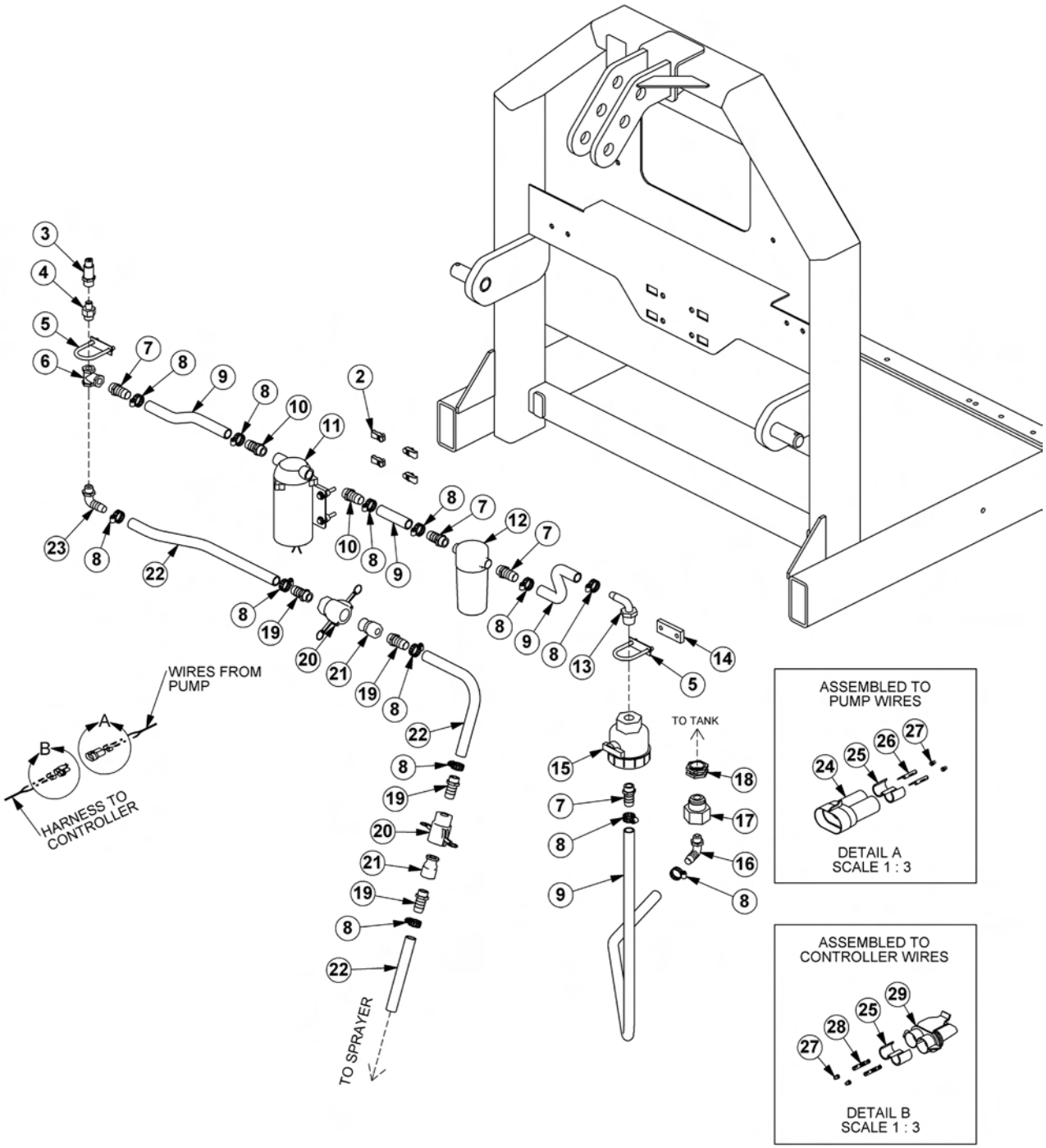

COMMON SABER

Continued...

ITEM	PART NO.	QTY.	DESCRIPTION
1	06370128	1	MNT,3PNT,UNI
2	35176	4	U-NUT,1/4,3/4 TO CENTER
3	06520336	1	CNTRLR,SENSOR,06520333
4	06520354	1	BUSHING,REDUCER,WETCUT
5	27329	2	U-BOLT,1/4" X 1" X 2"
6	06520353	1	FITTING,TEE,WETCUT
7	06520349	4	FITTING,BARB,HOSE,WETCUT
8	35091	13	CLAMP, HOSE #6
9	06520469	5	1/2" HOSE (FEET)
10	06503168	2	SWIVEL,1/2" STR
11	06520359	1	PUMP,LARGE
12	06520361	1	FILTER,FIRE KIT,RAILKUT
---	06520351	1	STRAINER,40MESH
13	06520367	1	ELBOW,1/2X1/2BARB,POLY
14	06401133	1	SPACER,Ø.31X1.75X.38
15	06520348	1	VLV,BALL,WETCUT
16	06520347	1	FITTING,ELBOW,WETCUT
17	06503169	1	BUSHING,1MPX1/2FP (100 & 150 GALLON TANKS ONLY)
18	06520346	1	FITTING,BULKHEAD,WETCUT (50 GALLON TANKS ONLY)
19	06503173	4	FITTING,BARB,1/2X3/8,WETCUT
20	06520401	2	QUIK CPLR,FEM,1/2,WETCUT
21	06520400	2	QUIK CPLR,MALE,1/2,WETCUT
22	06520316	-	3/8" HOSE (INCLUDED WITH SPRAYER)
23	06503165	1	ELBOW,1/2X3/8BARB,POLY
24	06510052	1	CONN.,BODY,MALE,METRIPACK 150
25	06510056	2	TPA
26	06510054	2	TERMINAL,MALE,16/18GA.METPAK
27	06510051	4	SEAL,16-18GA,METPAK
28	06510055	2	TERMINAL,FEM,16/18GA.METPAK
29	06510053	1	CONN.,BODY,FEM,METRIPACK 150

COMMON SABER

WETCUT FRONT PLUMBING - 50IN MOWERS

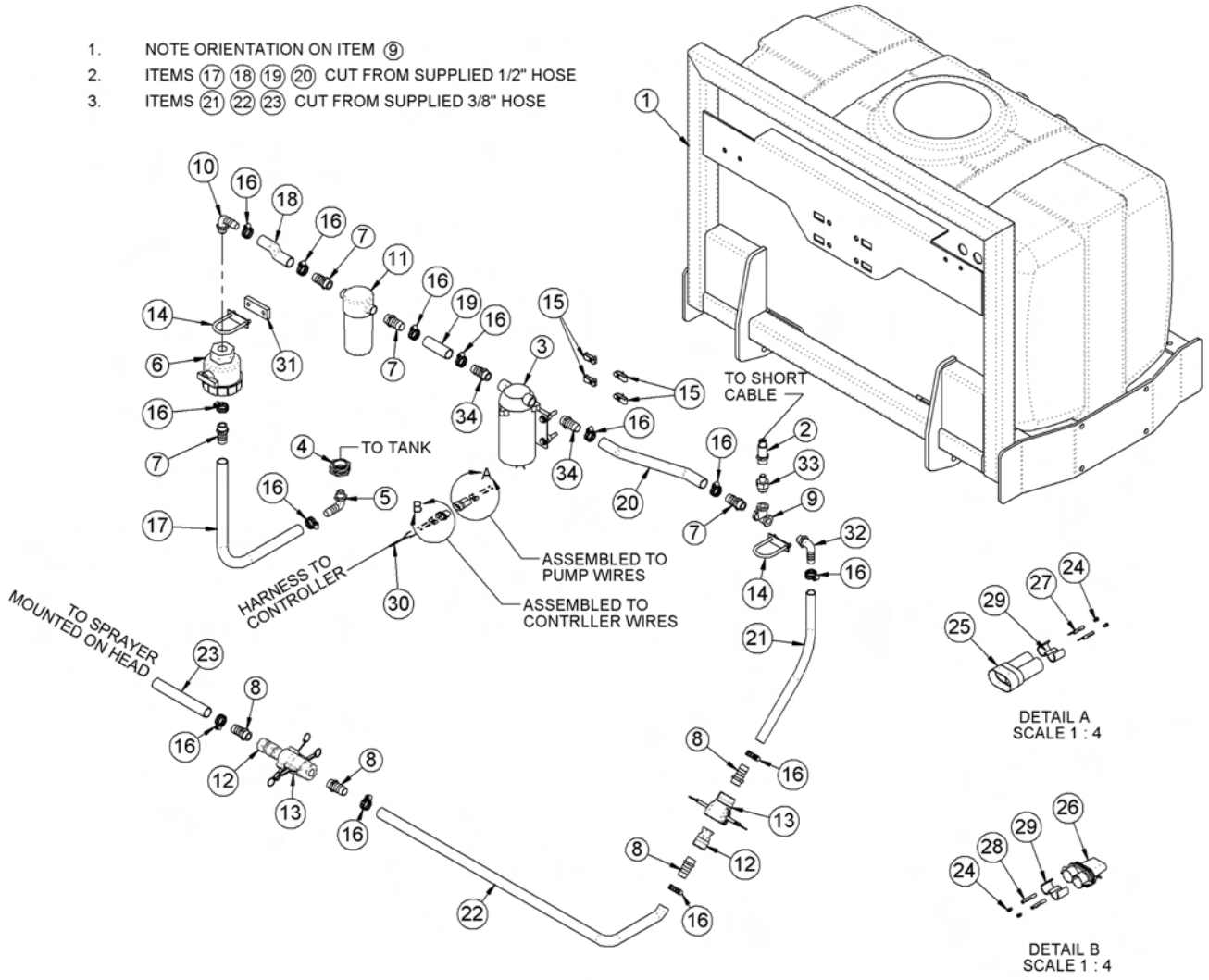

COMMON SABER

Continued...

ITEM	PART NO.	QTY.	DESCRIPTION
1	06370204	1	MNT,FRONT,UNI
2	06520336	1	CNTRLR,SENSOR,06520333
3	06520341	1	PUMP,WETCUT
4	06520346	1	FITTING,BULKHEAD,WETCUT
5	06520347	1	FITTING,ELBOW,WETCUT
6	06520348	1	VLV,BALL,WETCUT
7	06520349	4	FITTING,BARB,HOSE,WETCUT
8	06503173	4	FITTING,1/2"MP X 3/8"BARB
9	06520353	1	FITTING,TEE,WETCUT
10	06520367	1	ELBOW,1/2"MP X 1/2"BARB,POLY
11	06520361	1	FILTER,FIRE KIT,RAILKUT
---	06520351	1	STRAINER,40MESH
12	06520400	2	QUIK CPLR,MALE,1/2",WETCUT
13	06520401	2	QUIK CPLR,FEM,1/2",WETCUT
14	27329	2	U-BOLT,1/4" X 1" X 2"
15	35176	4	U-NUT,1/4",3/4" TO CENTER
16	35091	13	CLAMP,HOSE #6
17 - 20	06520469	5	1/2" HOSE (FEET)
21 - 23	06520316	-	3/8" HOSE (INCLUDED WITH SPRAYER)
24	06510051	4	SEAL,16-18GA,METPAK
25	06510052	1	CONN.,BODY,MALE,METRIPACK 150
26	06510053	1	CONN.,BODY,FEM,METRIPACK 150
27	06510054	2	TERMINAL,MALE,16/18GA.METPAK
28	06510055	2	TERMINAL,FEM,16/18GA.METPAK
29	06510056	2	TPA
30	06520337	1	INCLUDED WITH CONTROLLER
31	06401133	1	SPACER,Ø.31" X 1.75" X .38"
32	06503165	1	ELBOW,1/2"MP X 3/8"BARB,POLY
33	06520354	1	BUSHING,REDUCER,WETCUT
34	06503176	2	FITTING,3/8"MP X 1/2"BARB

WETCUT FRONT PLUMBING - LARGER MOWERS

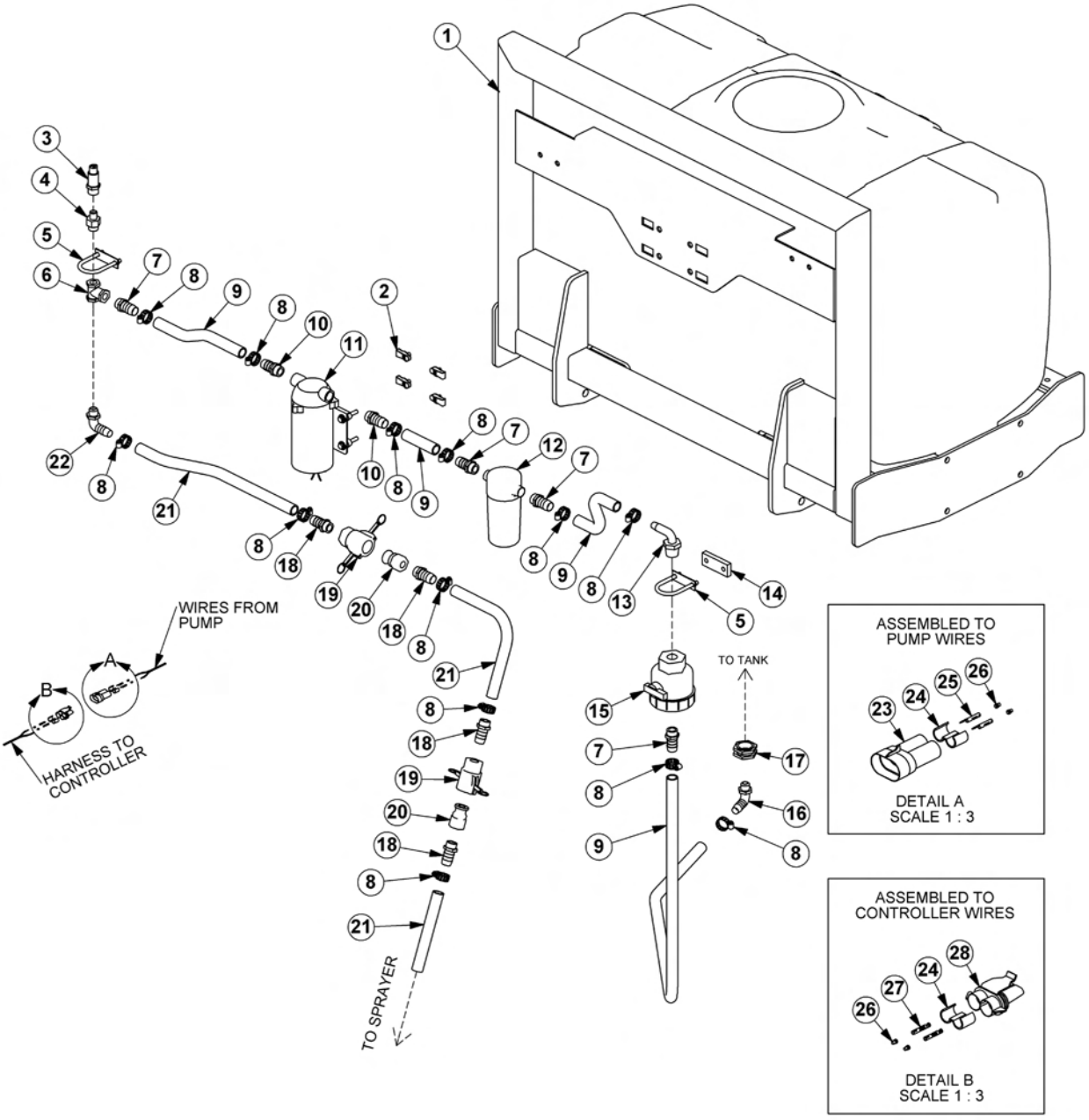

COMMON SABER

WETCUT FRONT PLUMBING - LARGER MOWERS

Continued...

ITEM	PART NO.	QTY.	DESCRIPTION
1	06370204	1	MNT,FRONT,UNIV
2	35176	4	U-NUT,1/4,3/4 TO CENTER
3	06520336	1	CNTRLR,SENSOR,06520333
4	06520354	1	BUSHING,REDUCER,WETCUT
5	27329	2	U-BOLT,1/4" X 1" X 2"
6	06520353	1	FITTING,TEE,WETCUT
7	06520349	4	FITTING,BARB,HOSE,WETCUT
8	35091	13	CLAMP, HOSE #6
9	06520469	5	1/2" HOSE (FEET)
10	06503168	2	SWIVEL,1/2" STR
11	06520359	1	PUMP,LARGE
12	06520361	1	FILTER,FIRE KIT,RAILKUT
---	06520351	1	STRAINER,40MESH
13	06520367	1	ELBOW,1/2X1/2BARB,POLY
14	06401133	1	SPACER,Ø.31X1.75X.38
15	06520348	1	VLV,BALL,WETCUT
16	06520347	1	FITTING,ELBOW,WETCUT
17	06520346	1	FITTING,BULKHEAD,WETCUT
18	06503173	4	FITTING,BARB,1/2X3/8,WETCUT
19	06520401	2	QUIK CPLR,FEM,1/2,WETCUT
20	06520400	2	QUIK CPLR,MALE,1/2,WETCUT
21	06520316	-	3/8" HOSE (INCLUDED WITH SPRAYER)
22	06503165	1	ELBOW,1/2X3/8BARB,POLY
23	06510052	1	CONN.,BODY,MALE,METRIPACK 150
24	06510056	2	TPA
25	06510054	2	TERMINAL,MALE,16/18GA.METPAK
26	06510051	4	SEAL,16-18GA,METPAK
27	06510055	2	TERMINAL,FEM,16/18GA.METPAK
28	06510053	1	CONN.,BODY,FEM,METRIPACK 150

COMMON SABER

WETCUT 50IN SPRAYER HEAD ASSEMBLY

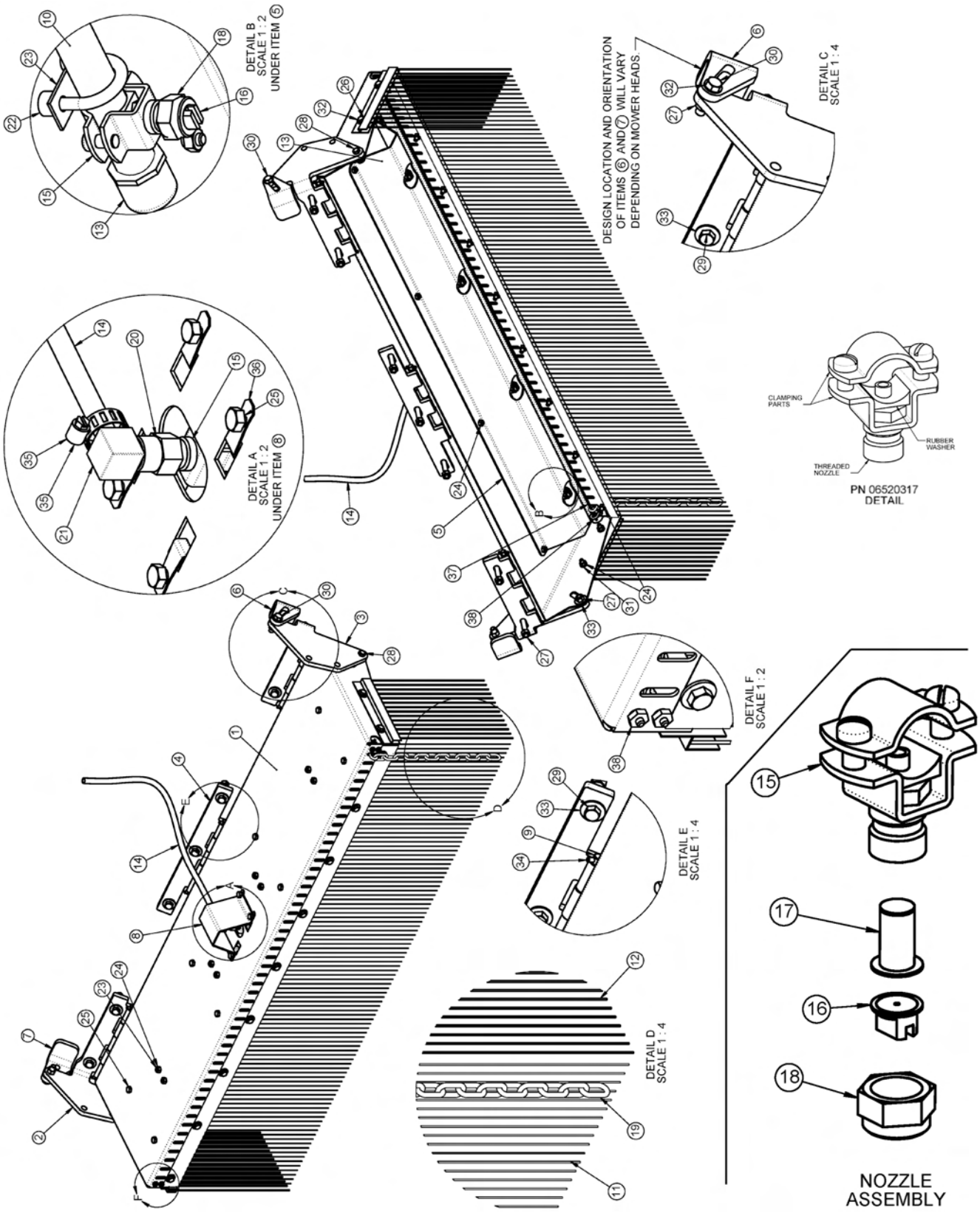

COMMON SABER

WETCUT 50IN SPRAYER HEAD ASSEMBLY

Continued...

ITEM	PART NO.	QTY.	DESCRIPTION
1	06370105	1	HOOD,SPRAYER
2	06370106	1	HINGE,LH,SPRAYER
3	06370107	1	HINGE,RH,SPRAYER
4	06370108	1	HINGE,CNTR,SPRAYER
5	06410668	1	GUARD,SPRAYER,WETCUT
6	06410753	1	MNT,RH,WET CUT (FLAIL)
---	06410942	1	MNT,RH,WET CUT (ROTARY)
7	06410754	1	MNT,LH,WET CUT (FLAIL)
---	06410943	1	MNT,LH,WET CUT (ROTARY)
8	06410796	1	GUARD,HOSE,WETCUT
9	06420069	3	PIN,HINGE,WET CUT
10	06497003	1	TUBE,LG,SPRAYER
11	06499012	1	SKIRT,ANTI SPRAY,50
12	06499013	2	SKIRT,ANTI SPRAY,7
13	06520314	2	TUBE,CAP,SPRAYER
14	06520316	15	HOSE,SPRAYER (FEET)
15	06520317	5	NOZZLE,SPRAYER
16	06520319	4	TIP,NOZZLE,SPRAYER
17	06520320	4	FILTER,NOZZLE,SPRAYER
18	06520321	4	NUT,NOZZLE,SPRAYER
19	06520322	49	CHAIN,.18" X 1.31" X 13LINKS
20	06520381	1	ADAPTER,1/4"NPT,WETCUT
21	06520382	1	ELBOW,BARB,3/8" X 1/4"NPT
22	06520383	8	SPACER,.50"O.D. X .252"I.D. X .38",NYLON
23	32550	4	U-BOLT,1/4" X 1" X 1" X 1-3/4"
24	21527	29	HEX NUT,NYLOCK,1/4",NC
25	21528	12	CAPSCREW,1/4" X 1/2",NC
26	21529	13	CAPSCREW,1/4" X 3/4",NC
27	21625	11	HEX NUT,3/8",NC
28	21630	2	CAPSCREW,3/8" X 1",NC
29	21634	7	CAPSCREW,3/8" X 2",NC
30	21632	2	CAPSCREW,3/8" X 1-1/2",NC
31	21986	4	LOCKWASHER,1/4"
32	22014	15	FLATWASHER,1/4"
33	22016	9	FLATWASHER,3/8",GR8
34	34698	6	ROLL PIN, PLAIN, 3/16" X 7/8"
35	35091	1	CLAMP,HOSE #6
36	35176	4	U-NUT,1/4",3/4" TO CENTER
37	06520376	5	CABLE,3/16"
38	06537022	2	U-BOLT,CABLE,3/16"

COMMON SABER

WETCUT 60IN SPRAYER HEAD ASSEMBLY

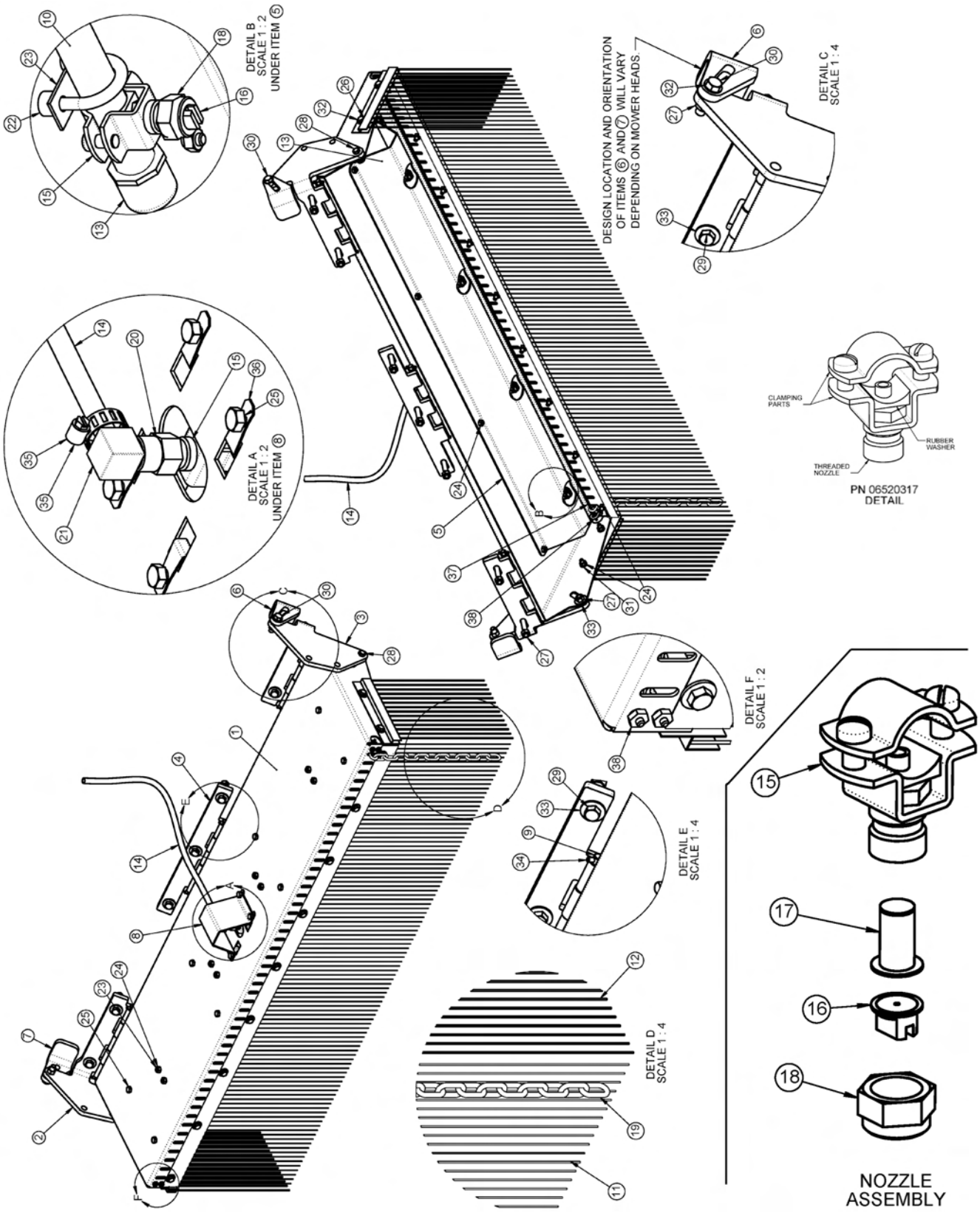

COMMON SABER

WETCUT 60IN SPRAYER HEAD ASSEMBLY

Continued...

ITEM	PART NO.	QTY.	DESCRIPTION
1	06370210	1	HOOD,SPRAYER
2	06370106	1	HINGE,LH,SPRAYER
3	06370107	1	HINGE,RH,SPRAYER
4	06370108	1	HINGE,CNTR,SPRAYER
5	06411234	1	GUARD,SPRAYER,WETCUT
6	06410753	1	MNT,RH,WET CUT (FLAIL)
---	06410942	1	MNT,RH,WET CUT (ROTARY)
7	06410754	1	MNT,LH,WET CUT (FLAIL)
---	06410943	1	MNT,LH,WET CUT (ROTARY)
8	06410796	1	GUARD,HOSE,WETCUT
9	06420069	3	PIN,HINGE,WET CUT
10	06497009	1	TUBE,LG,SPRAYER
11	06499018	1	SKIRT,ANTI SPRAY,60
12	06499013	2	SKIRT,ANTI SPRAY,7
13	06520314	2	TUBE,CAP,SPRAYER
14	06520316	15	HOSE,SPRAYER (FEET)
15	06520317	6	NOZZLE,SPRAYER
16	06520319	5	TIP,NOZZLE,SPRAYER
17	06520320	5	FILTER,NOZZLE,SPRAYER
18	06520321	5	NUT,NOZZLE,SPRAYER
19	06520322	61	CHAIN,.18" X 1.31" X 13LINKS
20	06520381	1	ADAPTER,1/4"NPT,WETCUT
21	06520382	1	ELBOW,BARB,3/8" X 1/4"NPT
22	06520383	10	SPACER,.50"O.D. X .252"I.D. X .38",NYLON
23	32550	5	U-BOLT,1/4" X 1" X 1" X 1-3/4"
24	21527	33	HEX NUT,NYLOCK,1/4",NC
25	21528	15	CAPSCREW,1/4" X 1/2",NC
26	21529	13	CAPSCREW,1/4" X 3/4",NC
27	21625	13	HEX NUT,3/8",NC
28	21630	2	CAPSCREW,3/8" X 1",NC
29	21634	7	CAPSCREW,3/8" X 2",NC
30	21632	4	CAPSCREW,3/8" X 1-1/2",NC
31	21986	4	LOCKWASHER,1/4"
32	22014	33	FLATWASHER,1/4"
33	22016	11	FLATWASHER,3/8",GR8
34	34698	6	ROLL PIN, PLAIN, 3/16" X 7/8"
35	35091	1	CLAMP,HOSE #6
36	35176	4	U-NUT,1/4",3/4" TO CENTER
37	06520376	6	CABLE,3/16" (FEET)
38	06537022	2	U-BOLT,CABLE,3/16"

COMMON SABER

WETCUT CABLES

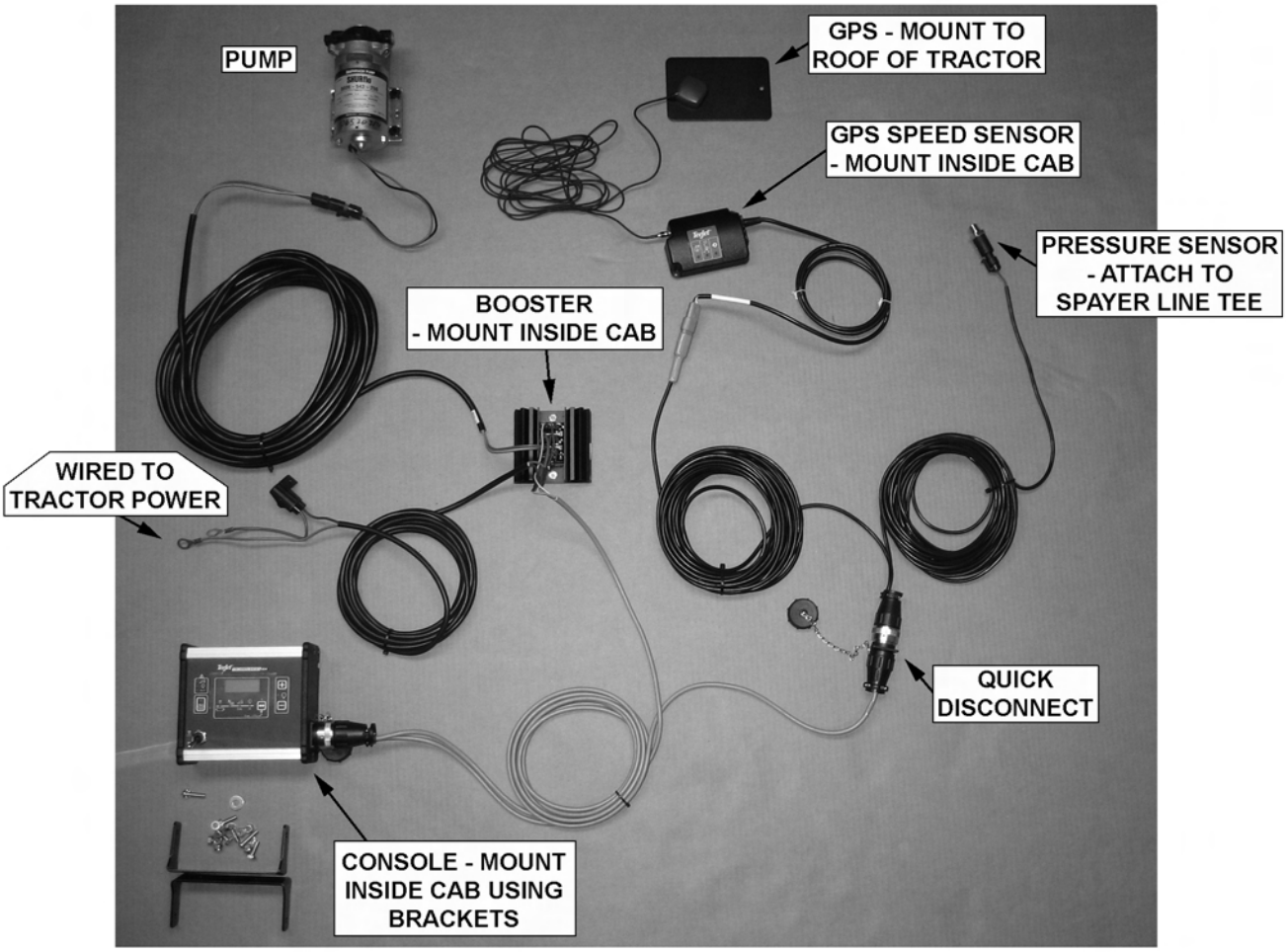

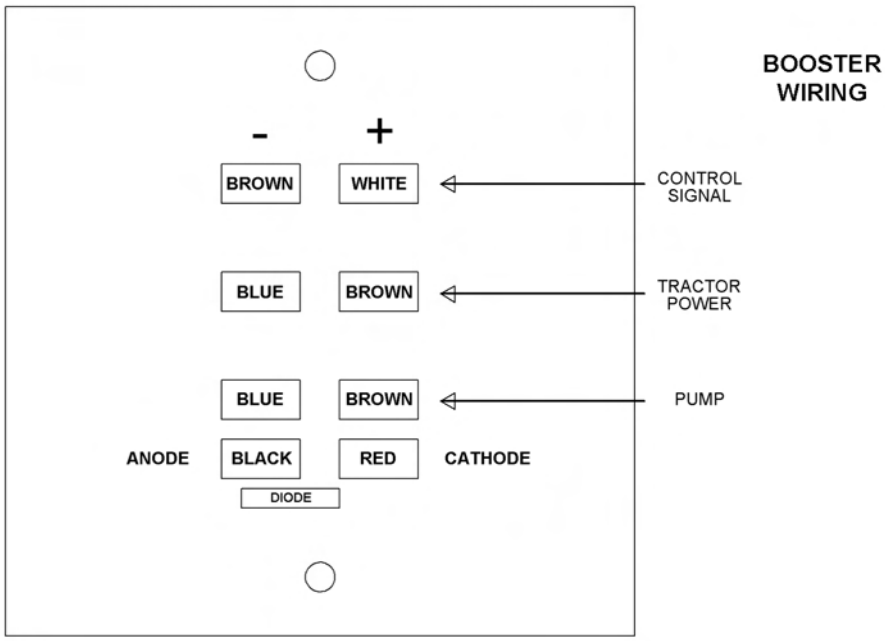

COMMON SABER

WARRANTY SECTION

WARRANTY INFORMATION

Tiger Corporation, 3301 N. Louise, Sioux Falls, South Dakota, warrants to the original Retail Customer, the new Tiger equipment is free of defects in material and workmanship. Any part of equipment that in Tiger's judgement, show evidence of such defects will be repaired or replaced without charge, provided that the failure of part(s) shall have occurred within twelve (12) months from the date of delivery of said equipment to the Retail Customer. Expendable components such as knives, oil, chain sprockets, skid shoes, knife mounting disks and the like are excluded but not limited to this warranty.

The Retail Customer must pay the transportation cost to and from the Tiger Dealer's service shop for warranty service. Warranty service will be performed by the Tiger Dealer from whom the equipment was purchased, during service shop regularly scheduled days and hours of operation.

All Tiger obligation under this warranty shall be terminated if the equipment is modified or altered in ways not approved in writing by Tiger, if repair parts other than genuine Tiger repair parts have been used, or if the equipment has been subject to misuse, neglect, accident, improper maintenance or improper operation.

Tiger Corporation reserves the right to make improvements in design or changes in specification at any time without incurring any obligation to owners of equipment previously sold.

No agent or person has authority to alter, add to or waive the above warranties which are agreed to be in the only warranties, representations or promises, expressed or implied, as to the quality or performance of the products covered and which do not include any implied warranty of merchantability or fitness. In no event will Tiger be liable for incidental or consequential damages or injuries, including, but not limited to, loss of profits, rental or substitute equipment or other commercial loss.

THERE ARE NO WARRANTIES WHICH EXTEND BEYOND THOSE EXPRESSED HEREIN.

It is the Purchasers obligation to sign the warranty registration form **AFTER** he / she has Read and Understands the Operation and Safety Instructions stated within this manual.

ONE LAST WORD

This manual cannot possibly cover all of the potentially hazardous situations you will encounter. By being familiar with the safety rules, operating and maintenance instructions in this manual you can help prevent accidents. The objective of this manual is to help make you a better operator. Remember,
SAFETY IS YOU!

1012

Your safety and the safety of those around you depends on **YOU**. Common sense should play a large role in the operation of this machine.

Since we at Tiger Corporation are constantly striving to improve out products, we reserve the right to change specifications or design at any time.

TO THE OWNER / OPERATOR / DEALER

To keep your implement running efficiently and safely, read your manual thoroughly and follow these directions and the Safety Messages in this manual and on the machine. The table of contents clearly identifies each section where you can easily find the information you need.

The Occupational Safety and Health Act (OSHA 1928.51 subpart C) makes the following minimum requirements for tractor operators.

OWNER REQUIREMENTS:

1. Provide a Roll-Over-Protective Structure that meets the requirements of this Standard; and
2. Provide Seatbelts that meet the requirements of this Standard and SAE J3C; and
3. Ensure that each employee uses such Seatbelt while the tractor is moving; and
4. Ensure that each employee tightens the Seatbelt sufficiently to confine the employee to the protected area provided by the ROPS.

OPERATOR REQUIREMENTS:

1. Securely fasten seatbelt it the tractor has a ROPS.
2. Where possible, avoid operating the tractor near steep ditches, embankments, and holes.
3. Reduce speed when turning, crossing slopes, and on rough, slick, or muddy surfaces.
4. Stay off slopes too steep for safe operation.
5. Watch where you are going – especially at row ends, on roads, and around trees.
6. Do Not permit others to ride.
7. Operate the tractor smoothly – no jerky turns, starts, or stops.
8. Hitch only to the draw-bar and hitch points recommended by the tractor manufacturer.
9. When the tractor is stopped, set brakes securely and use park lock, if available

Printed in USA